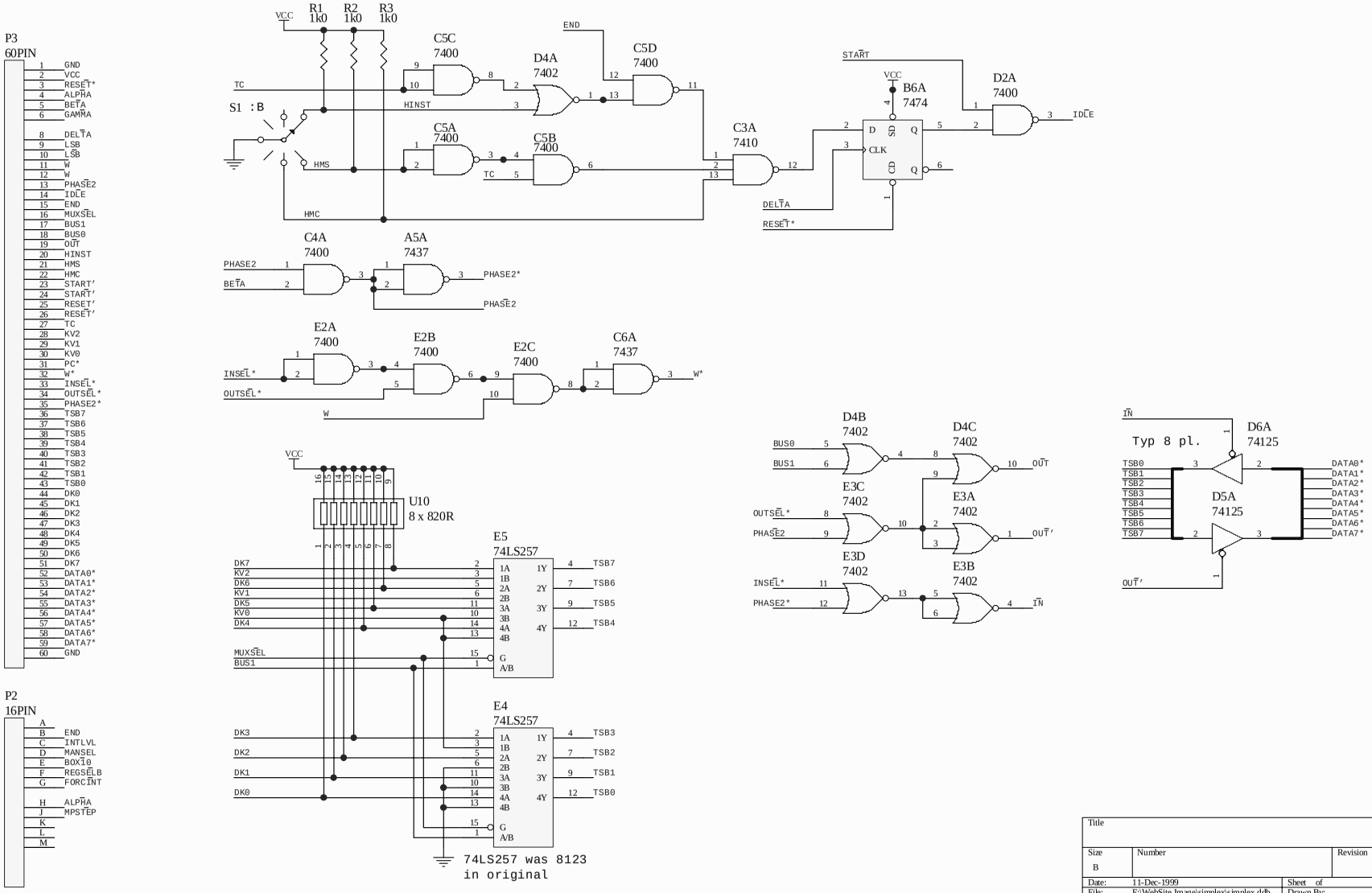
P3
60PIN
1 GND
2 VCC
3 RESET*
4 ALPHA
5 BETA
6 GAMMA
8 DELTA
9 LSB
10 LSB
11 W
12 W
13 PHASE2
14 IDLE
15 END
16 MUXSEL
17 BUS1
18 BUS0
19 OUT
20 HINST
21 HMS
22 HMC
23 START'
24 START'
25 RESET'
26 RESET'
27 TC
28 KV2
29 KV1
30 KV0
31 PC*
32 W*
33 INSEL*
34 OUTSEL*
35 PHASE2*
36 TSB7
37 TSB6
38 TSB5
39 TSB4
40 TSB3
41 TSB2
42 TSB1
43 TSB0
44 DK0
45 DK1
46 DK2
47 DK3
48 DK4
49 DK5
50 DK6
51 DK7
52 DATA0*
53 DATA1*
54 DATA2*
55 DATA3*
56 DATA4*
57 DATA5*
58 DATA6*
59 DATA7*
60 GND
P2
16PIN
A
B END
C INTLVL
D MANSEL
E BOX10
F REGSELB
G FORCINT
H ALPHA
J MPSTEP
K
L
M
VCC
R1 1k0
R2 1k0
R3 1k0
S1 :B
TC
HINST
HMS
HMC
C5C 7400
C5A 7400
D4A 7402
C5B 7400
C5D 7400
END
C3A 7410
START
VCC
B6A 7474
D CLK SD CD Q Q
D2A 7400
IDLE
DELTA
RESET*
C4A 7400
A5A 7437
PHASE2
BETA
PHASE2*
PHASE2
E2A 7400
E2B 7400
E2C 7400
C6A 7437
INSEL*
OUTSEL*
W
W*
VCC
U10
8 x 820R
E5
74LS257
1A 1B 2A 2B 3A 3B 4A 4B G A/B
1Y 2Y 3Y 4Y
DK7
KV2
DK6
KV1
DK5
KV0
DK4
MUXSEL
BUS1
TSB7
TSB6
TSB5
TSB4
E4
74LS257
DK3
DK2
DK1
DK0
TSB3
TSB2
TSB1
TSB0
74LS257 was 8123
in original
D4B 7402
D4C 7402
E3C 7402
E3A 7402
E3D 7402
E3B 7402
BUS0
BUS1
OUTSEL*
PHASE2
INSEL*
PHASE2*
OUT
OUT'
IN
IN
Typ 8 pl.
D6A 74125
D5A 74125
TSB0
TSB1
TSB2
TSB3
TSB4
TSB5
TSB6
TSB7
DATA0*
DATA1*
DATA2*
DATA3*
DATA4*
DATA5*
DATA6*
DATA7*
OUT'
Title
Size
B
Number
Revision
Date: 11-Dec-1999
Sheet of
File: F:\WebSite Image\simplex\simplex.ddb
Drawn By: