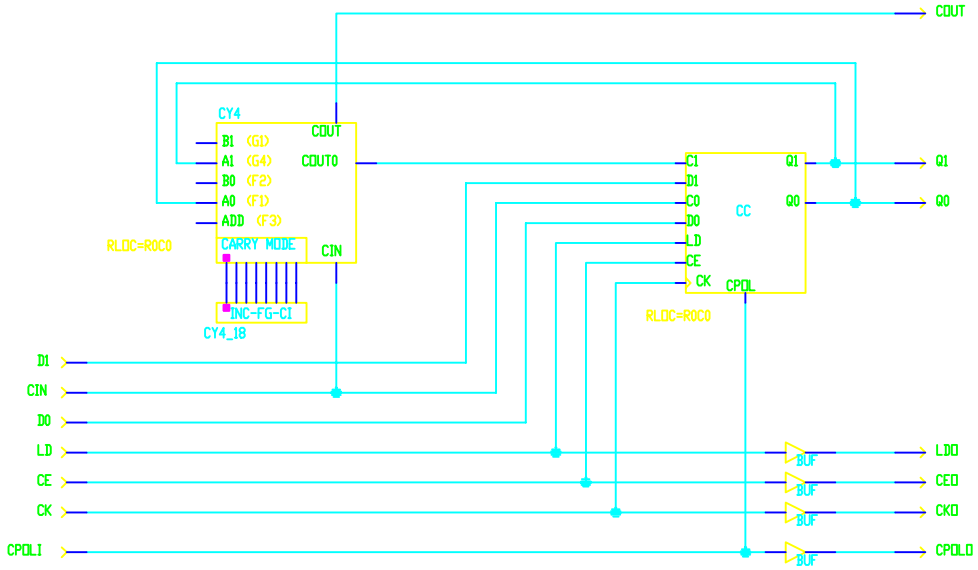

2-bit counter block

D-X Designs Pty Ltd
ACN 071 162 037
Digital Expertise

Title: Modular Counters (XC4000)
Client:
Project: MinIDTR No. 102A Drawn:DRB
File: CT_2 Sheet 1 of 1

REVISIONS

Ltr.	Date	Description
A	24/4/95	Initial draft