7. Diagnostics Chart for Power Line

A: BASIC DIAGNOSTICS PROCEDURE

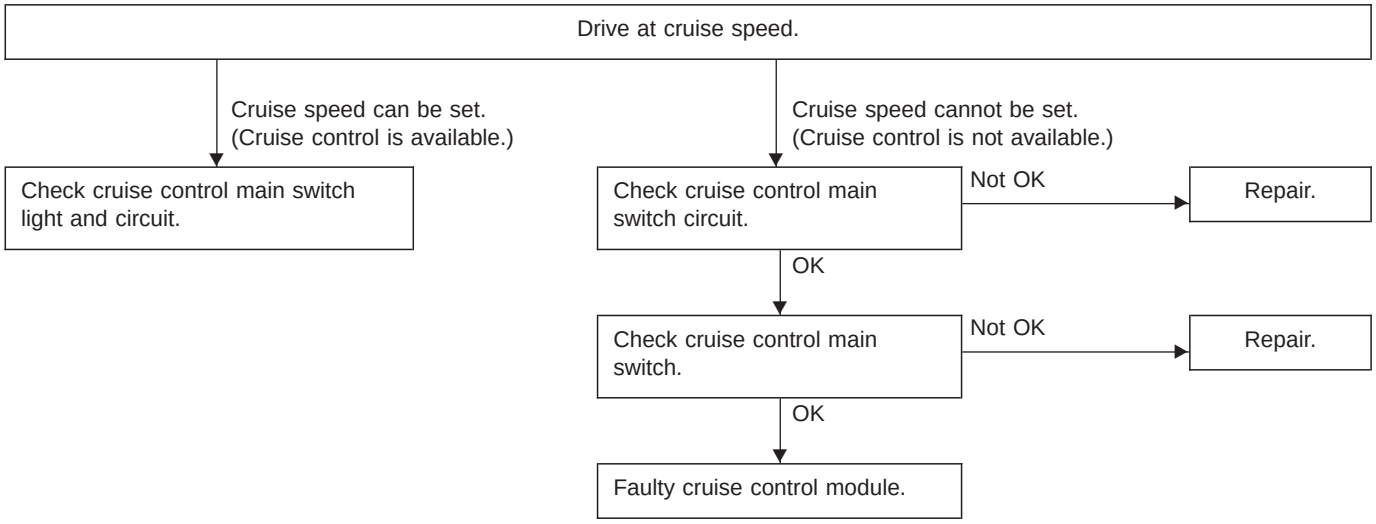

B: CHECK INDICATOR AND CIRCUIT IN CRUISE CONTROL MAIN SWITCH

DIAGNOSIS:

- Bulb failure or open harness of the indicator circuit in the cruise control main switch.

TROUBLE SYMPTOM:

- Cruise control can be set, normally indicator does not come on. (When main switch is pressed.)

1. Check cruise control main switch.
- Not OK → Replace bulb.
- OK ↓

2. Check circuit between cruise control module and cruise control main switch indicator light.
- Not OK → ● Repair or replace wiring harness. ● If no output from the cruise control module, replace the cruise control module.
- OK ↓

Failure of the cruise control module.

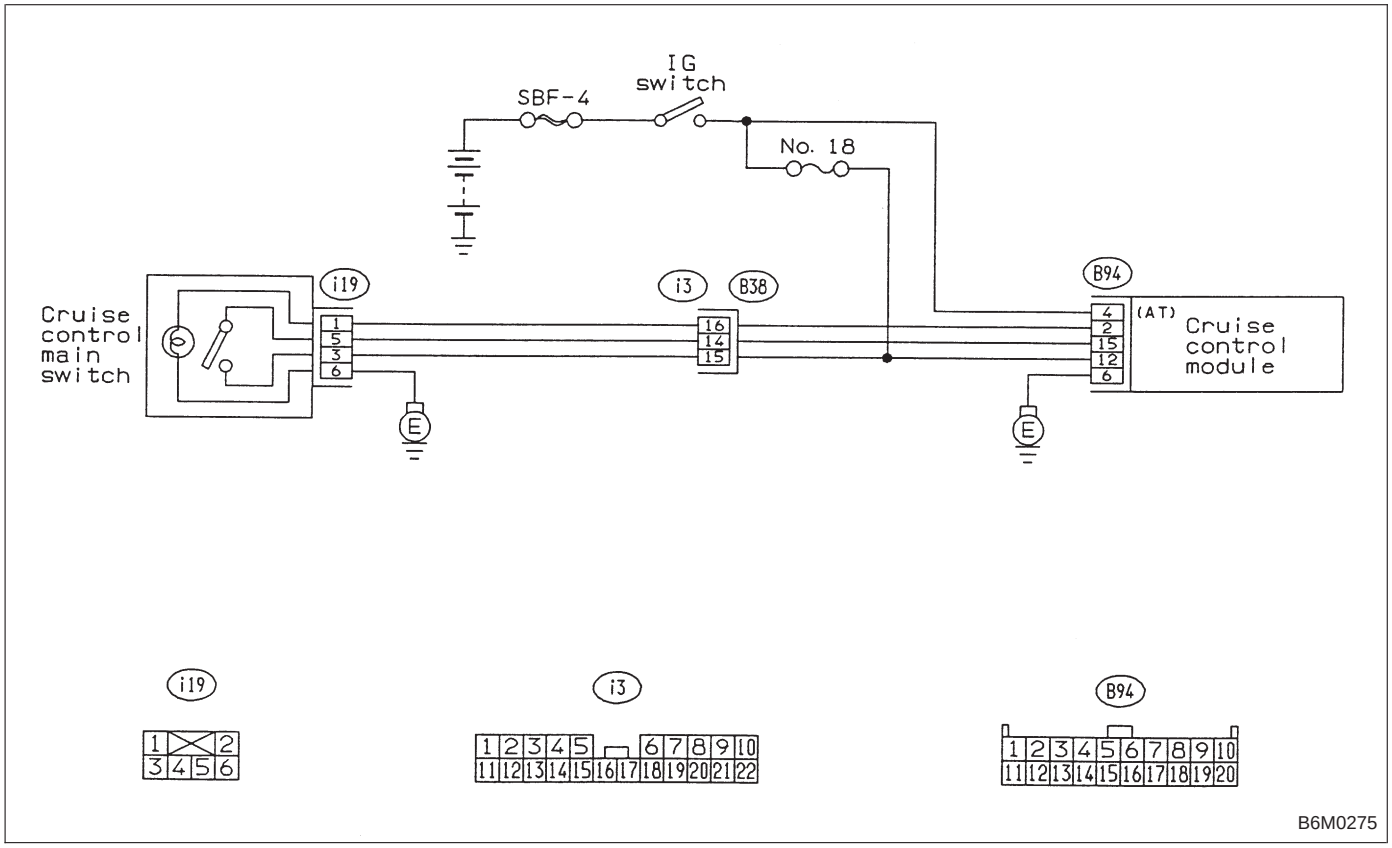

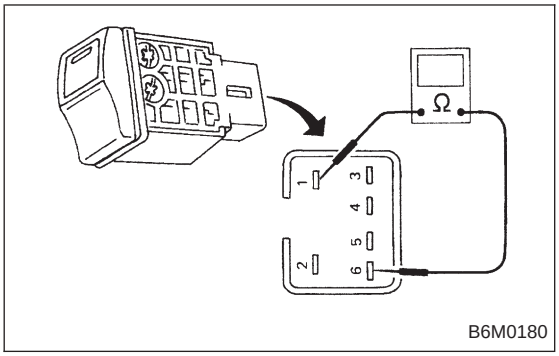

1. CHECK CRUISE CONTROL MAIN SWITCH.

1) Remove cruise control main switch.
2) Measure resistance between cruise control main switch terminals.

Terminals / Specified resistance:
No. 1 — No. 6 / Approx. 50 Ω

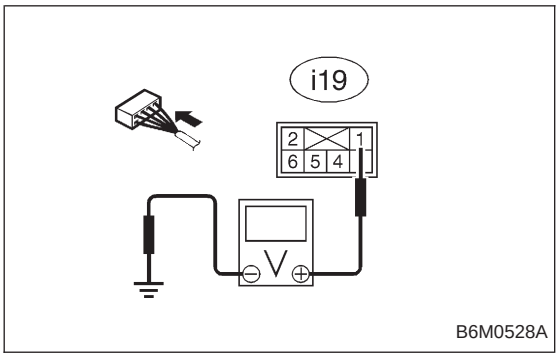

2. CHECK CIRCUIT BETWEEN CRUISE CONTROL MODULE AND CRUISE CONTROL MAIN SWITCH INDICATOR LIGHT.

1) Turn the ignition switch to ON.
2) Turn cruise control main switch to ON.
3) Measure voltage between cruise control main switch connector and the body.

Connector & terminal / Specified voltage:
(i19) No. 1 — Body / 10 V, or more

4) Turn the ignition switch and cruise control main switch to OFF.
5) Remove the connector from the cruise control main switch.
6) Measure resistance of ground circuit between the cruise control main switch connector and body.

Connector & terminal / Specified resistance:
(i19) No. 6 — Body / 10 Ω, max.

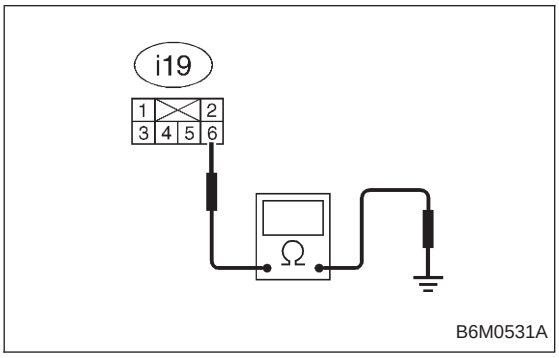

C: CHECK CRUISE CONTROL MAIN SWITCH

DIAGNOSIS:

- Faulty cruise control main switch, or open harness.

TROUBLE SYMPTOM:

- Cruise control main switch is not turned ON and cruise control cannot be set.

NOTE:
When the main relay (built-in cruise control module) operates, the main switch circuit is in normal condition.
The main relay operation can be checked by hearing the operation sounds.
This operation sounds will be heard when ignition switch and cruise control main switch is turned to ON.

1. Check fuse and power supply.
- Not OK → Melted fuse → repair the shorted part of the circuit. → replace fuse.
- OK ↓

2. Check cruise control main switch.
- Not OK → Open harness → repair faulty main switch. → replace.
- OK ↓

3. Check harness connector between cruise control main switch and cruise control module.
- Not OK → Repair or replace wiring harness.
- OK ↓

Failure of the cruise control module.

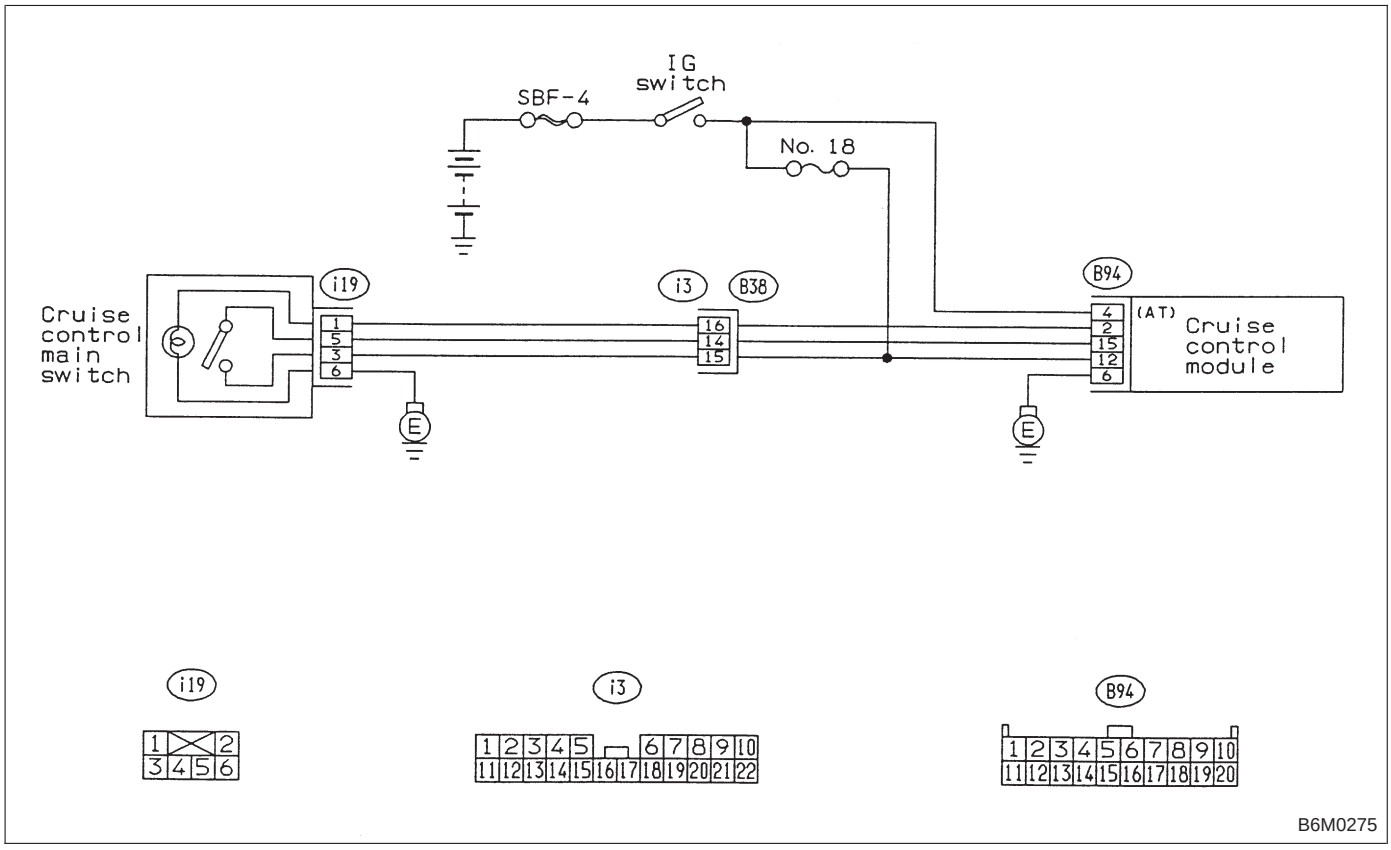

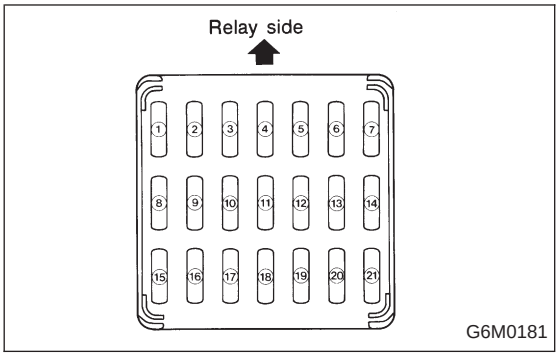

1. CHECK FUSE AND POWER SUPPLY.

1) Check fuse No. 18.
2) Turn ignition switch to ON.
3) Measure voltage between fuse box connector and body.

Connector & terminal / Specified voltage:
(B51) No. 4 — Body / 10 V, or more

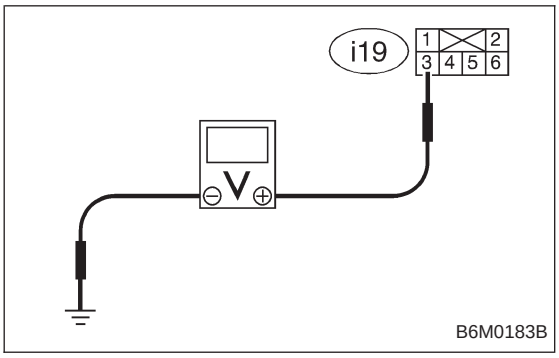

2. CHECK CRUISE CONTROL MAIN SWITCH.

1) Turn ignition switch to OFF.
2) Remove cruise control main switch and disconnect connector.
3) Turn ignition switch to ON.
4) Measure voltage between cruise control main switch connector and body.

Connector & terminal / Specified voltage:
(i19) No. 3 — Body / 10 V, or more

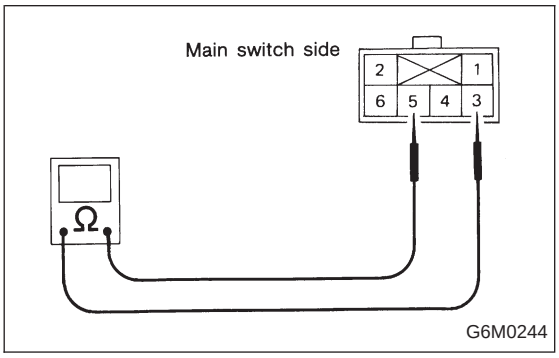

5) Measure resistance between cruise control main switch terminals.

Terminals / Specified resistance:
No. 3 — No. 5 / 10 Ω, max. (ON)
1 MΩ, min. (OFF)

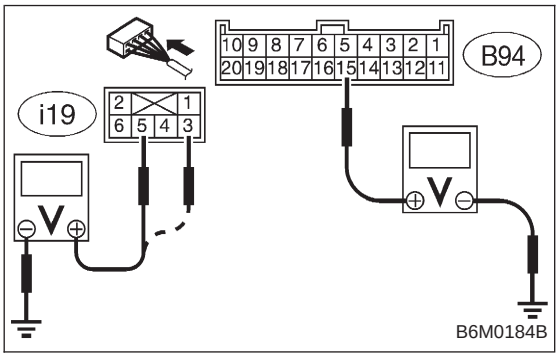

3. CHECK HARNESS CONNECTOR BETWEEN CRUISE CONTROL MAIN SWITCH AND CRUISE CONTROL MODULE.

1) Connect connector.
2) Turn ignition switch to ON.
3) Turn cruise control main switch to ON.
4) Measure voltage between each terminal of cruise control main switch or cruise control module and body.

Connector & terminal / Specified voltage:
(i19) No. 3 — Body / 10 V, or more
(i19) No. 5 — Body / 10 V, or more
(B94) No. 15 — Body / 10 V, or more

NOTE:
Depress cruise control main switch with fingers while measuring (i19) No. 5 — Body.