8. Diagnostics Chart with Trouble Code

A: TROUBLE CODE

Trouble code	Item	Contents of diagnosis	Page
10	OK	Normal	18
11	BRAKE/ST/CL or N	● Input signals from brake switch “OFF”, stop light switch “ON” (Brake pedal is in depressed condition.) ● Input signals from clutch switch “OFF”, or inhibitor switch is in “N” position. [Clutch pedal is depressed (MT), or select lever is set to N position (AT).]	20
12	NOT SET SP	Out of cruise speed range	22
13	LOW SP LIM	Low-speed control limiter	22
14	CANCEL SW	Input signal from cancel switch	26
15	NO MEMORY	No memorized cruise speed	—
21	SP SENS NG	Faulty vehicle speed sensor 2	22
22	COM SW NG	Faulty SET/COAST switch or RESUME/ACCEL switch	26
23	RELAY NG	Faulty safety relay included in cruise control module	29
24	CPU RAM NG	Faulty CPU RAM included in cruise control module	29
31	MOTOR NG	Faulty vacuum motor or motor drive system	30
32	AIR VAL NG	Faulty air valve or valve drive system	30
33	REL VAL NG	Faulty release valve or valve drive system	30

B: TROUBLE CODE 10 — NORMAL CONDITION —

DIAGNOSIS:

- SET/COAST switch or disconnection of the wiring or short circuit.
- RESUME/ACCEL switch or disconnection of the wiring or short circuit.

TROUBLE SYMPTOM:

- Cruise control cannot be set, or it is cancelled immediately.
- RESUME/ACCEL cannot be operated.

1. Check the signal using a select monitor.
- OK → Check for disconnection of the harnesses and connectors.
- Not OK ↓

2. Check the cruise control command switch.
- Not OK → ● Failure in the power source system. — Check the horn relay circuit. ● Failure in the switch or harnesses. — Replace.
- OK ↓

Failure of the cruise control module.

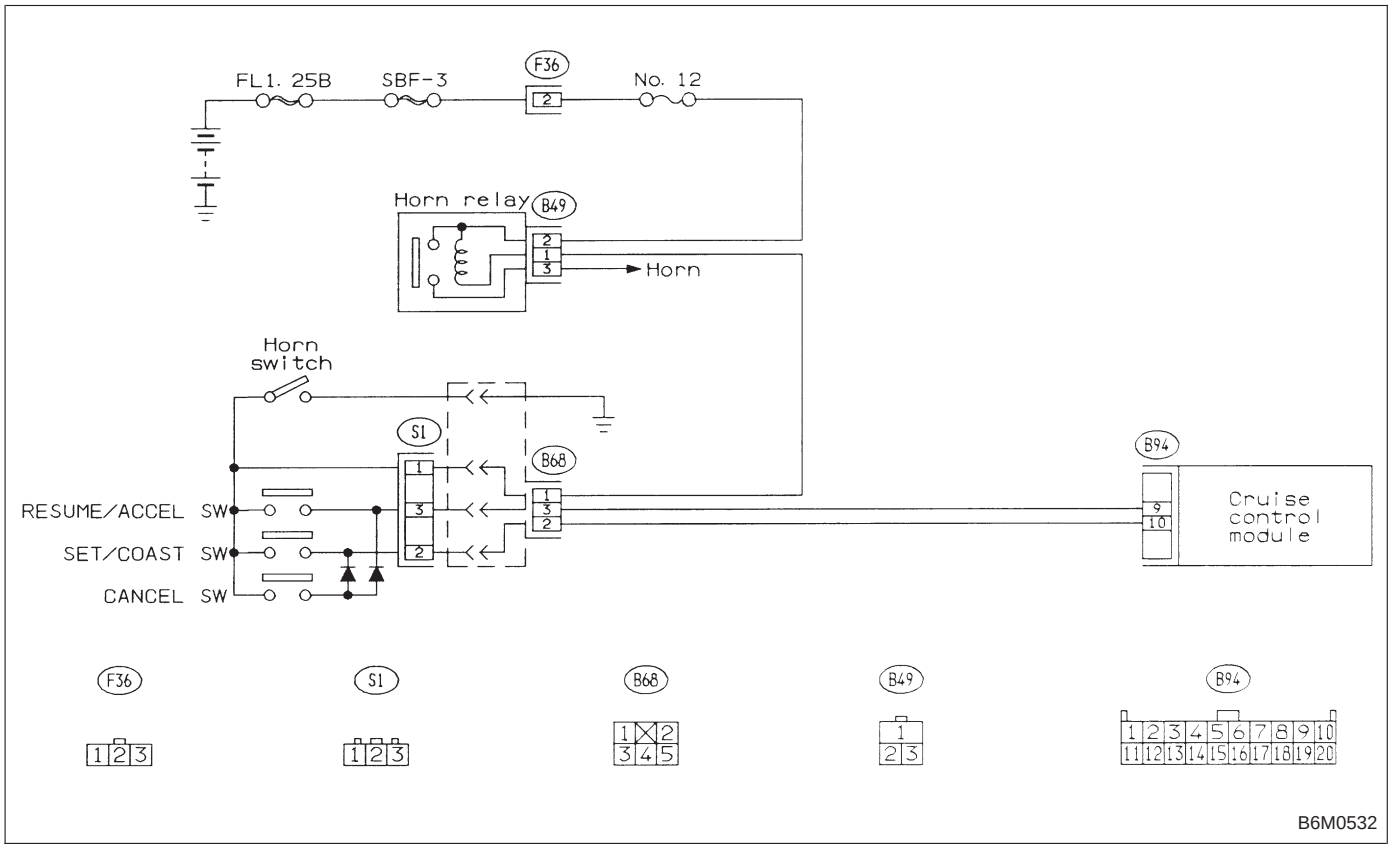

LED No.	Signal name	Display
1	SET/COAST switch	SE
2	RESUME/ACCEL switch	RE
3	Stop light switch	ST
4	● Brake switch ● Clutch switch (MT)	BR
5	Inhibitor switch (AT)	N
6	—	—
7	—	—
8	—	—
9	—	—
10	—	—

SE	RE	ST	BR	N
—	—	—	—	—

1	2	3	4	5
6	7	8	9	10

1. CHECK THE SIGNAL USING A SELECT MONITOR.

1) Turn ignition switch to ON.
2) Turn cruise control main switch to ON.
3) Set select monitor in “FA0” mode.
4) Check signals for proper operation.
   (1) When pushing the SET switch:
   LED No. 1 goes out — lights.
   (2) When pushing the RESUME switch:
   LED No. 2 goes out — lights.

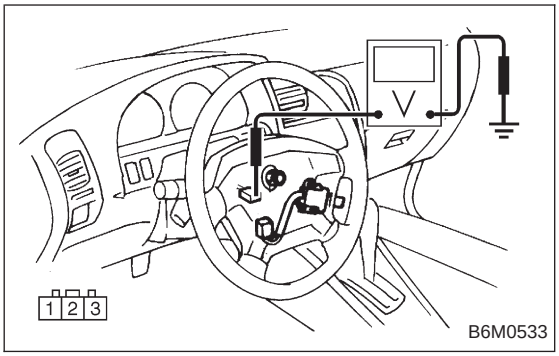

B6M0533

2. CHECK THE CRUISE CONTROL COMMAND SWITCH.

1) Disconnect connector from command switch.
2) Measure voltage between connector (S1) and body.

Connector & terminal / Specified voltage:
(S1) No. 1 — Body / 10 V, or more

3) Check for harness short circuit between command switch and body.

Terminals / Specified resistance:
No. 2 — Body / 1 MΩ, min.
No. 3 — Body / 1 MΩ, min.

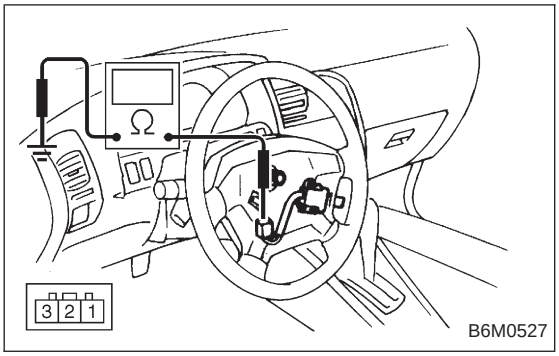

B6M0527

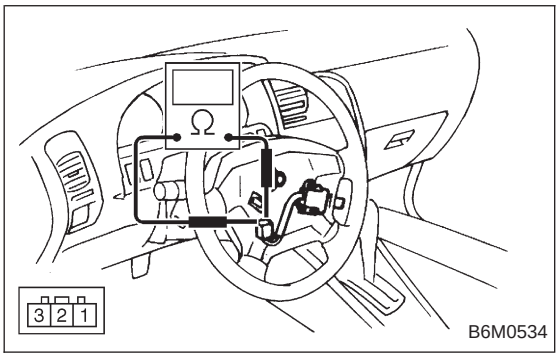

B6M0534

4) Measure resistance between each terminal of switch side connector to check the switch operation.

Terminals:
No. 1 — No. 2 (SET/COAST SWITCH)
No. 1 — No. 3 (RESUME/ACCEL SWITCH)

Specified resistance:
10 Ω, max. (ON)
1 MΩ, min. (OFF)

CANCEL (FB0)

11 BRAKE/ST/CL or N

B6M0244

C: TROUBLE CODE 11 — BRAKE SWITCH, STOP LIGHT SWITCH, CLUTCH SWITCH, INHIBITOR SWITCH —

DIAGNOSIS:

- Failure or disconnection of the stop light switch and brake switch.
- Failure or disconnection of the inhibitor switch. (AT)
- Failure or disconnection of the clutch switch. (MT)

TROUBLE SYMPTOM:

- Cruise control cannot be set.

1. Check the signal using a select monitor.	OK →	Check for disconnection of the harnesses and connectors.
↓ Not OK		
2. Check brake switch and stop light switch.	Not OK →	Replace switch, repair wiring.
↓ OK		
3. Check clutch switch. (MT model)	Not OK →	Replace switch, repair wiring.
↓ OK		
4. Check inhibitor switch. (AT model)	Not OK →	Replace switch, repair wiring.
	OK →	Failure of the cruise control module.

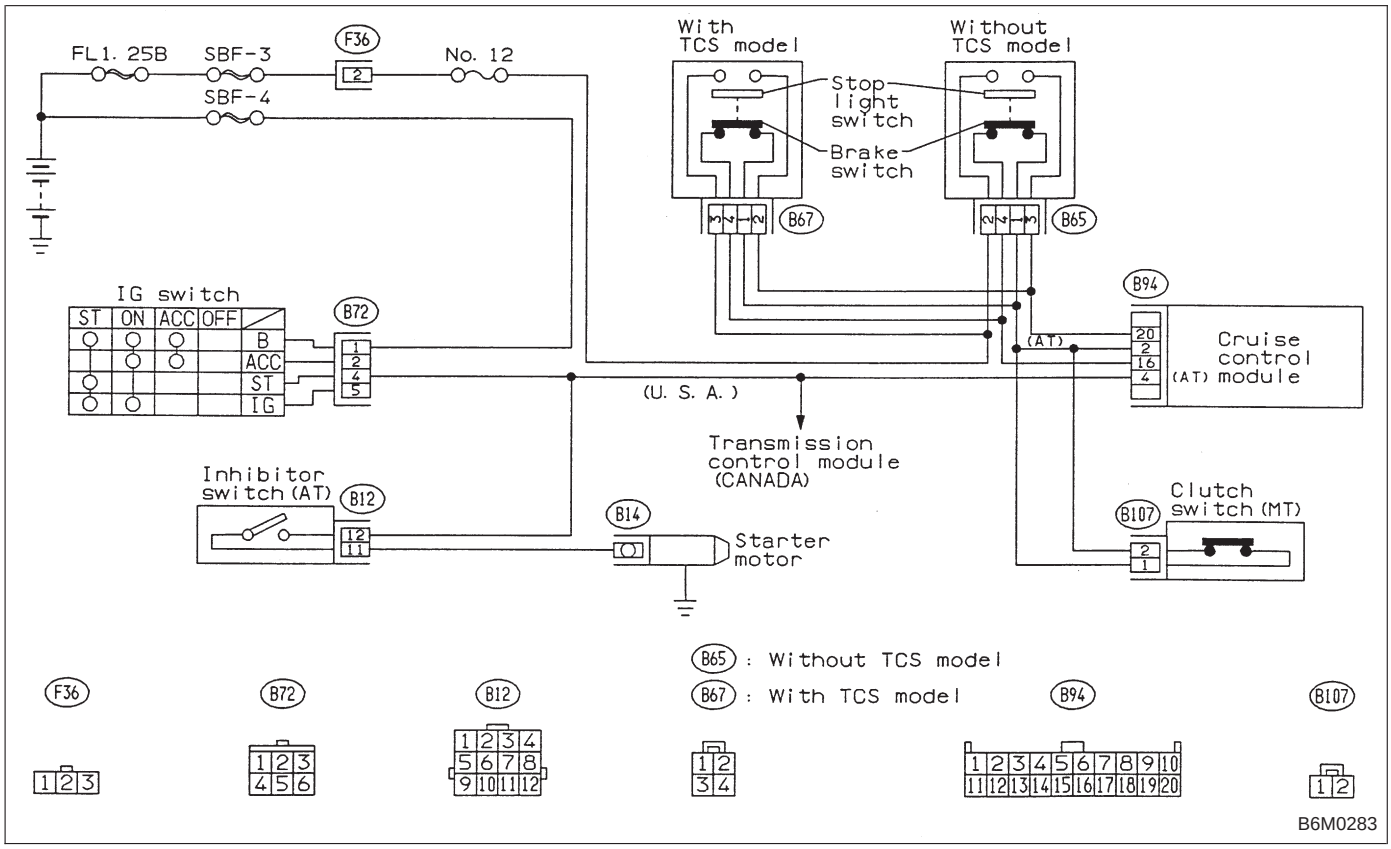

LED No.	Signal name	Display
1	SET/COAST switch	SE
2	RESUME/ACCEL switch	RE
3	Stop light switch	ST
4	● Brake switch ● Clutch switch (MT)	BR
5	Inhibitor switch (AT)	N
6	—	—
7	—	—
8	—	—
9	—	—
10	—	—

SE	RE	ST	BR	N
—	—	—	—	—
1	2	3	4	5
6	7	8	9	10

1. CHECK THE SIGNAL USING A SELECT MONITOR.

1) Turn ignition switch to ON.
2) Turn cruise control main switch to ON.
3) Apply parking brake securely.
4) Set select monitor in “FA0” mode.
5) Release the clutch pedal. (MT model)
6) Depress the brake pedal and check signals for proper operation.
   Stop light switch: LED No. 3 goes out — lights.
   Brake switch : LED No. 4 goes out — lights.
7) Release the brake pedal.
8) Depress the clutch pedal and check signal for proper operation. (MT model)
   Clutch switch: LED No. 4 goes out — lights.
9) Set the selector lever from D to N position and check signal for proper operation. (AT model)
   Inhibitor switch: LED No. 5 goes out — lights.

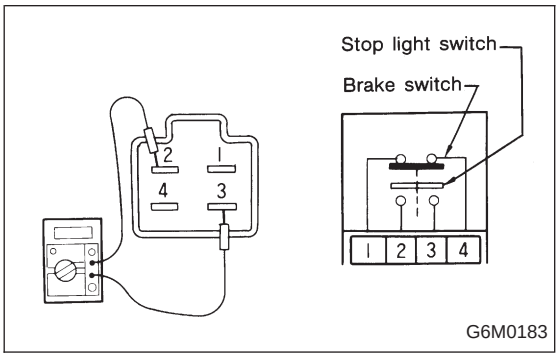

2. CHECK BRAKE SWITCH AND STOP LIGHT SWITCH.

1) Remove connector of stop and brake switch.
2) Check circuit between each terminal.

Pedal operation	Brake switch between No. 1 — No. 4	Stop light switch between No. 2 — No. 3
Depressing the brake pedal.	1 MΩ, or more	1 Ω, or less
Without depressing the brake pedal.	1 Ω, or less	1 MΩ, or more

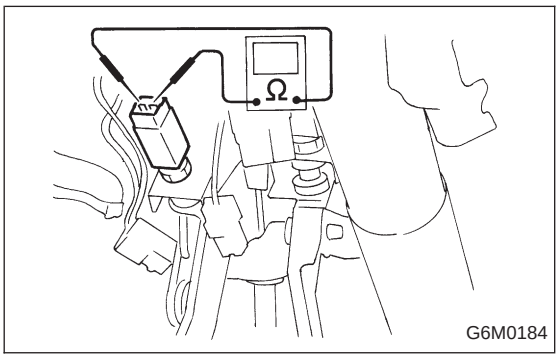

3. CHECK CLUTCH SWITCH. (MT MODEL)

1) Disconnect connector from clutch switch.
2) Check continuity of the clutch switch.

Terminals / Specified resistance:
No. 1 — No. 2 / 10 Ω, max. (Without pedal depressing.)
/ 1 MΩ, min. (Pedal depressing.)

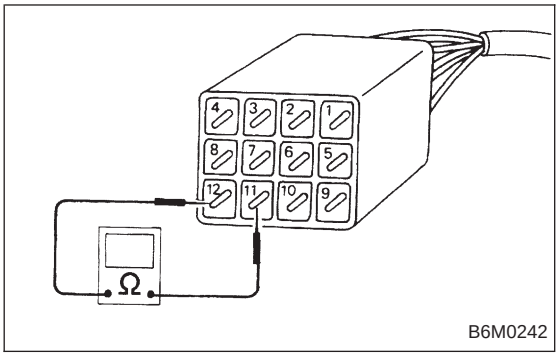

4. CHECK INHIBITOR SWITCH. (AT MODEL)

1) Set the selector lever to N position.
2) Disconnect connector of inhibitor switch.
3) Check continuity of the inhibitor switch.

Terminals / Specified resistance:
No. 11 — No. 12 / 10 Ω, max.
(Selector lever is in P or N.)
/ 1 MΩ, min.
(Selector lever is not in P or N.)

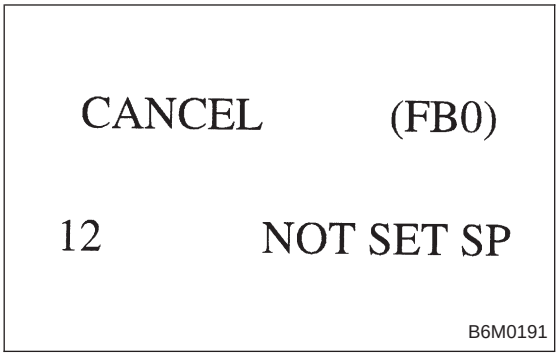

D: TROUBLE CODE 12, 13 AND 21 — VEHICLE SPEED SENSOR 2 SYSTEM —

DIAGNOSIS:

- Disconnection or short circuit of vehicle speed sensor 2 system.

TROUBLE SYMPTOM:

- Cruise control cannot be set. (Cancelled immediately.)

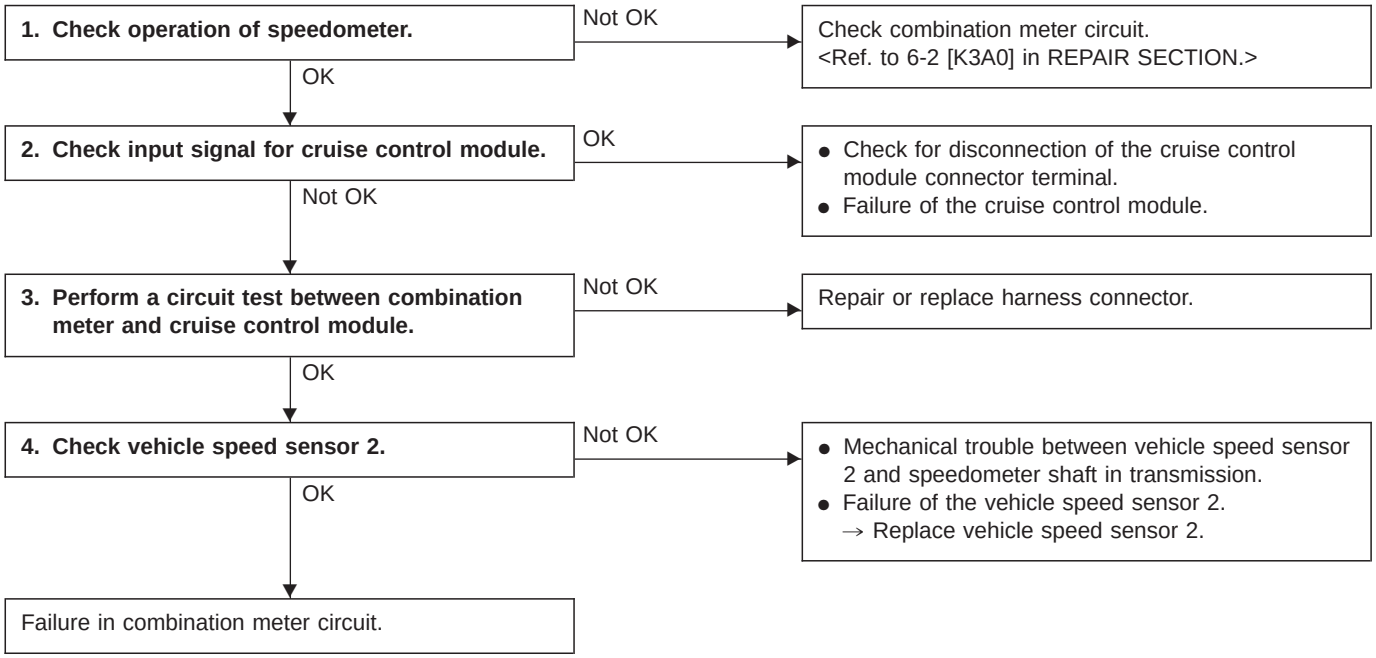

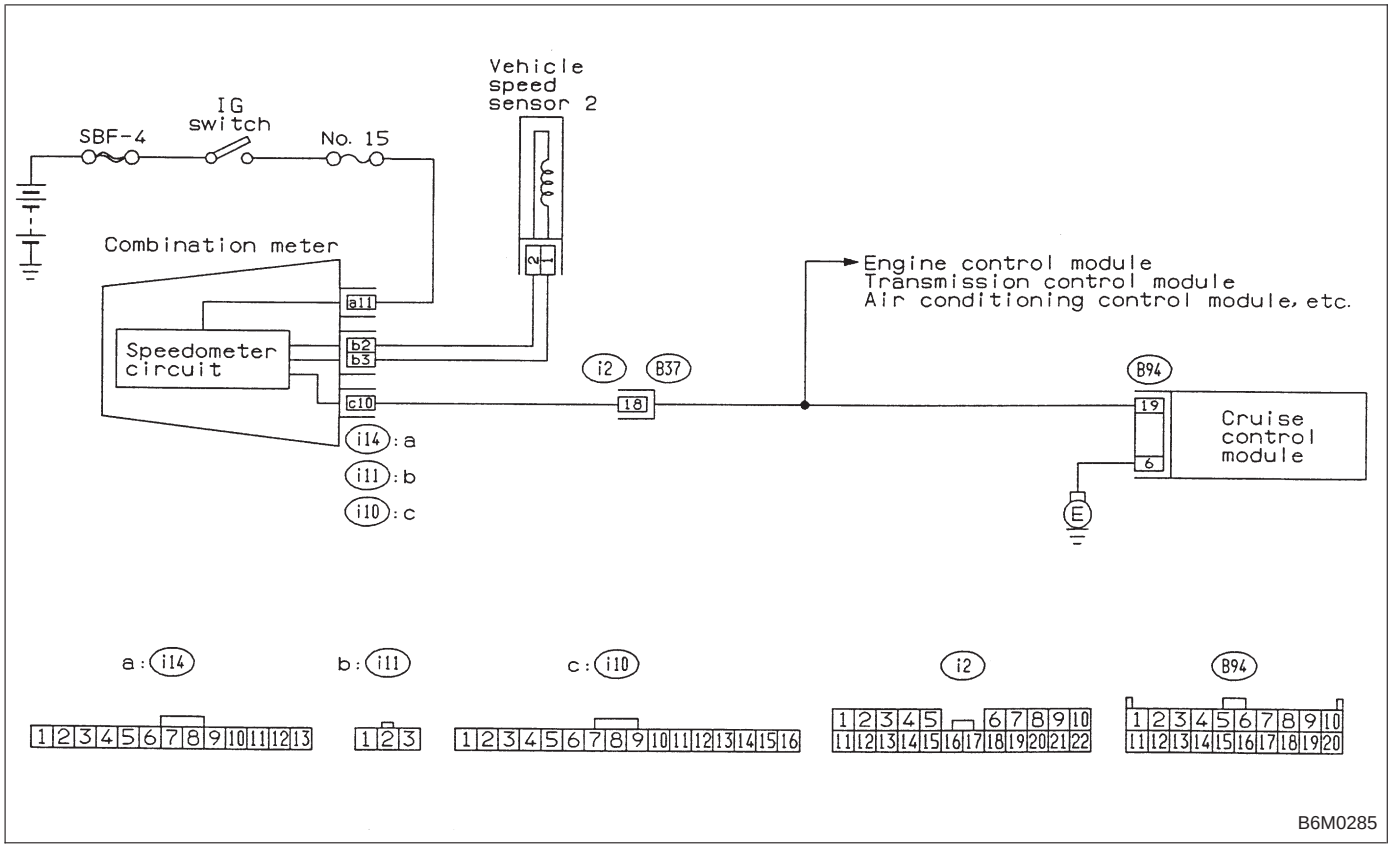

1. CHECK OPERATION OF SPEEDOMETER.

Make sure that speedometer indicates the vehicle speed by driving the vehicle.

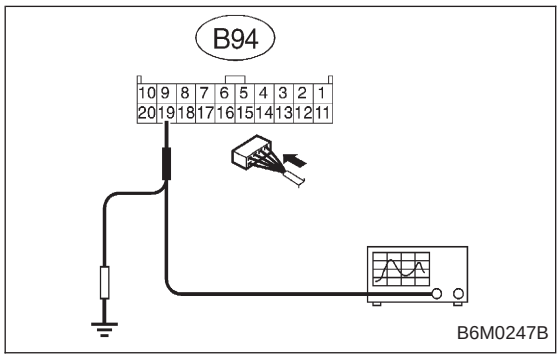

2. CHECK INPUT SIGNAL FOR CRUISE CONTROL MODULE.

WARNING:
Be careful not to be caught up by the running wheels.

1) Set the vehicle on free roller, or lift-up the vehicle and support with safety stands.
2) Set oscilloscope to cruise control module connector terminals.

Connector & terminal / (B94) No. 19 — Body

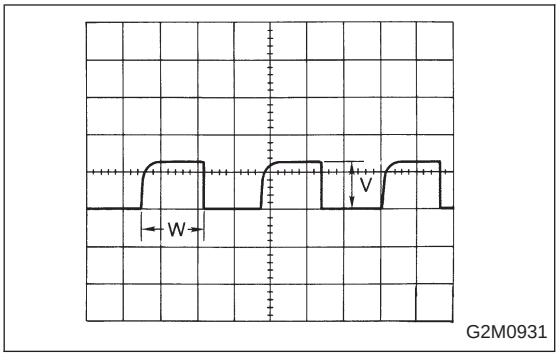

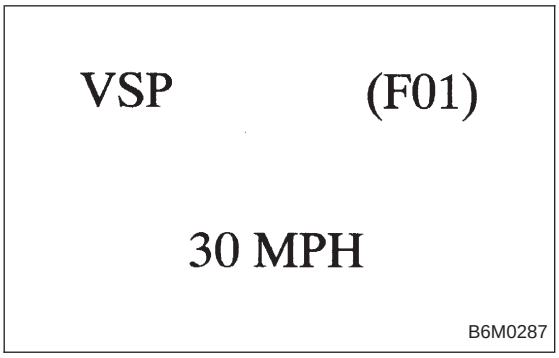

3) Start the engine.
4) Shift on the gear position, and keep the vehicle speed at constant.
5) Measure signal voltage.

Specified voltage (V): 2 V, or more

NOTE:
- If the vehicle speed increases, the width of amplitude (W) decreases.
- If oscilloscope is not available, check input signal (vehicle speed signal) by using a select monitor. (Refer to the procedure as described below.)
- Using the select monitor:
  (1) Set the vehicle on free roller, or lift-up the vehicle and support with safety stands.
  (2) Turn ignition switch to OFF and set select monitor.
  (3) Turn ignition switch to ON.
  (4) Turn cruise control main switch to ON.
  (5) Set select monitor in “F01” or “F02” mode.
  (6) Drive the vehicle at speed greater than 40 km/h (25 MPH).
  (7) Check that vehicle speed indication on select monitor and speedometer are equal.

NOTE:
- When there is a disconnection or short circuit in the harness between the meter and the cruise control module, the indicated value will be 0 to 1.0 km/h (0 to 0.6 MPH).
- In “F01” mode, vehicle speed is indicated in mile per hour (MPH).

In “F02” mode, vehicle speed is indicated in kilometer per hour (km/h).

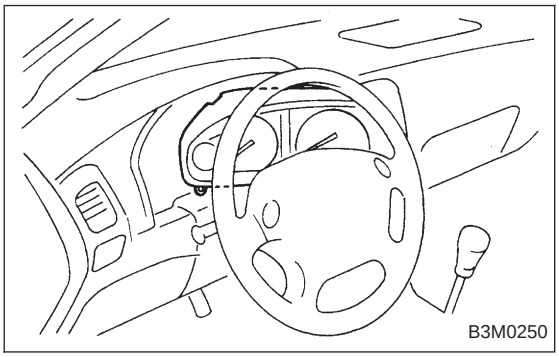

3. PERFORM A CIRCUIT TEST BETWEEN COMBINATION METER AND CRUISE CONTROL MODULE.

1) Turn ignition switch to OFF.
2) Remove combination meter.

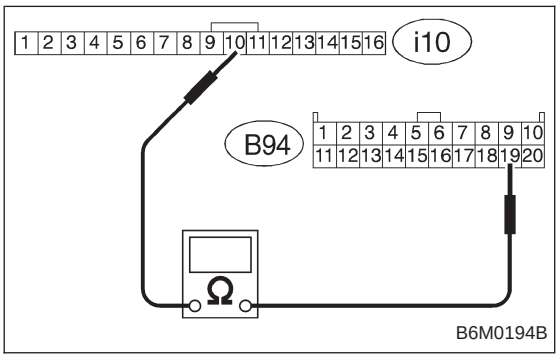

3) Disconnect connector from cruise control module.
4) Measure resistance of harness connector between combination meter and cruise control module.

Connector & terminal / Specified resistance:
(i10) No. 10 — (B94) No. 19 / 10 Ω, max.

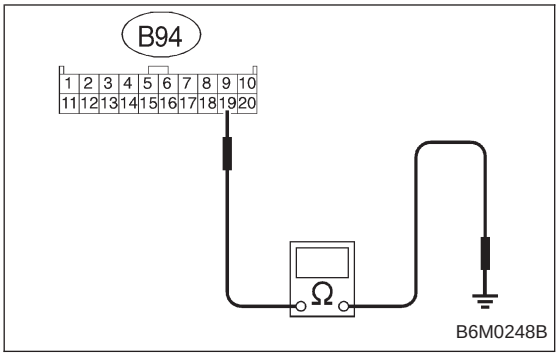

5) Measure resistance of harness connector between cruise control module and body to make sure that circuit does not short.

Connector & terminal / Specified resistance:
(B94) No. 19 — Body / 1 MΩ, min.

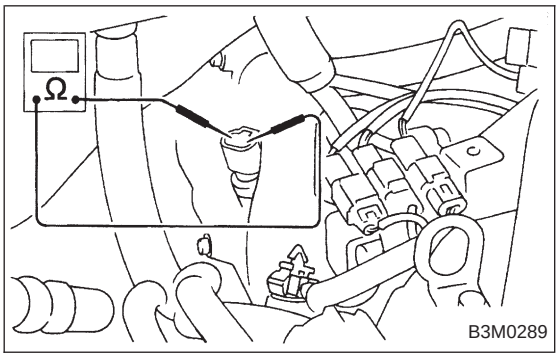

4. CHECK VEHICLE SPEED SENSOR 2.

1) Disconnect connector from vehicle speed sensor 2.
2) Measure resistance between terminals of vehicle speed sensor 2.

Terminals / Specified resistance:
No. 1 — No. 2 / 350 — 450 Ω

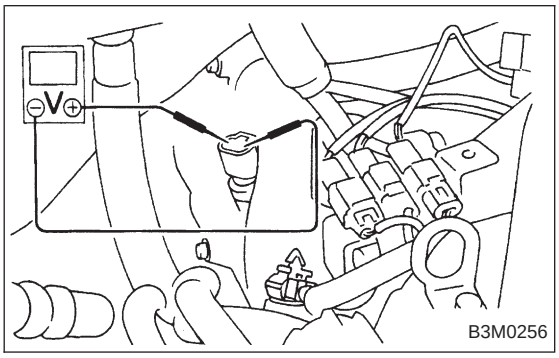

WARNING:
Be careful not to be caught up by the running wheels.

3) Set the vehicle on free roller, or lift-up the vehicle and support with safety stands.
4) Drive the vehicle at speed greater than 20 km/h (12 MPH).
5) Measure voltage between terminals of vehicle speed sensor 2.

Terminals / Specified voltage:
No. 1 — No. 2 / 2 V, or more (AC range)

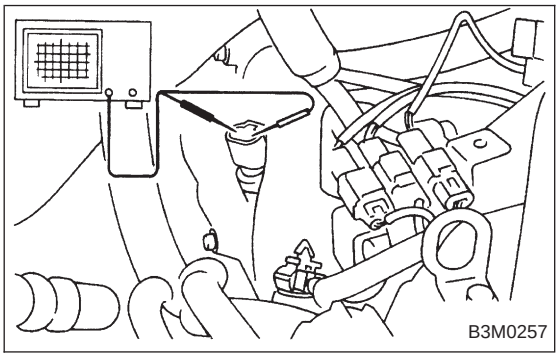

- Using an oscilloscope:
  (1) Turn ignition switch to OFF.
  (2) Set oscilloscope to vehicle speed sensor 2.
  (3) Drive the vehicle at speed greater than 20 km/h (12 MPH).
  (4) Measure signal voltage.

Specified voltage (V): 5 V, min.

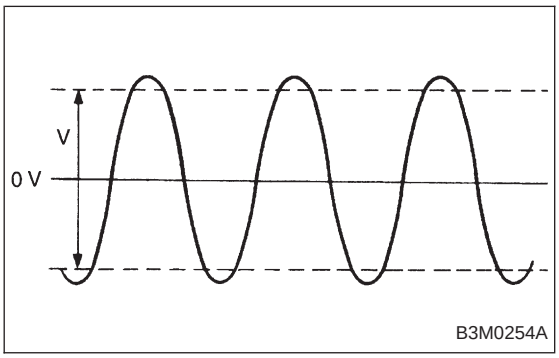

CANCEL (FB0)

14 CANCEL SW

B6M0196

E: TROUBLE CODE 14 AND 22 — SET/COAST SWITCH, RESUME/ACCEL SWITCH, CANCEL SWITCH —

DIAGNOSIS:

- Short circuit inside the SET SW and RESUME SW.

TROUBLE SYMPTOM:

- Cruise control cannot be set. (Cancelled immediately.)

1. Check short circuit of cruise control command switch.

Not OK → Replace the command switch.

OK ↓

Check for short circuit in harness between command switch and cruise control module.

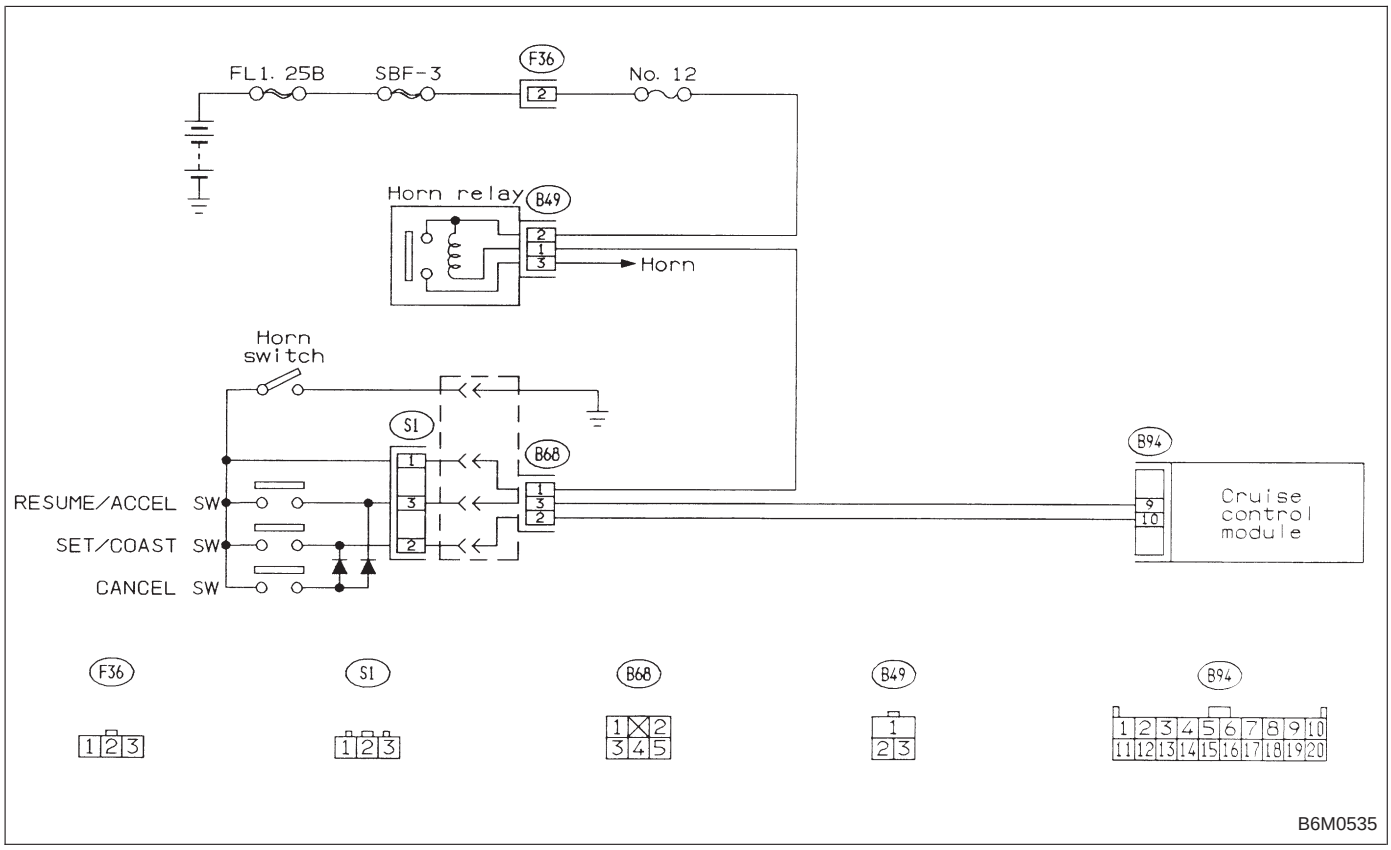

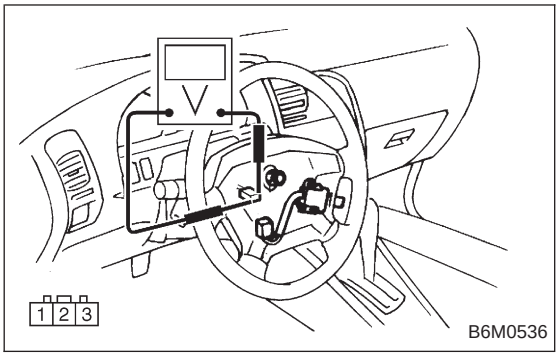

1. CHECK SHORT CIRCUIT OF CRUISE CONTROL COMMAND SWITCH.

1) Turn ignition switch to ON.
2) Measure voltage between each terminal of connector (S1).

Terminals / Specified resistance:

SET switch ON
(S1) No. 1 — (S1) No. 2 / 10 — 13 V
RESUME switch ON
(S1) No. 1 — (S1) No. 3 / 10 — 13 V
CANCEL switch ON
(S1) No. 1 — (S1) No. 2 / 10 — 13 V
(S1) No. 1 — (S1) No. 3 / 10 — 13 V

CANCEL (FB0)

23 RELAY NG

B6M0198

F: TROUBLE CODE 23 AND 24 — CRUISE CONTROL MODULE BUILT-IN RELAY, CPU RAM —

DIAGNOSIS:

- Welding of built-in relay of cruise control module.
- Failure of built-in CPU RAM of cruise control module.

TROUBLE SYMPTOM:

- Cruise control is cancelled and memorized cruise speed is also cancelled.
- Once cruise control is cancelled, cruise control cannot be set until the ignition switch and cruise main switch turns OFF, and then turns ON again.

NOTE:
Perform real-time diagnosis ("FA0" mode) and check vehicle speed signal with select monitor.
When input signals are in good condition, failure is in cruise control module.
(Check power supply and ground condition of cruise control module.)

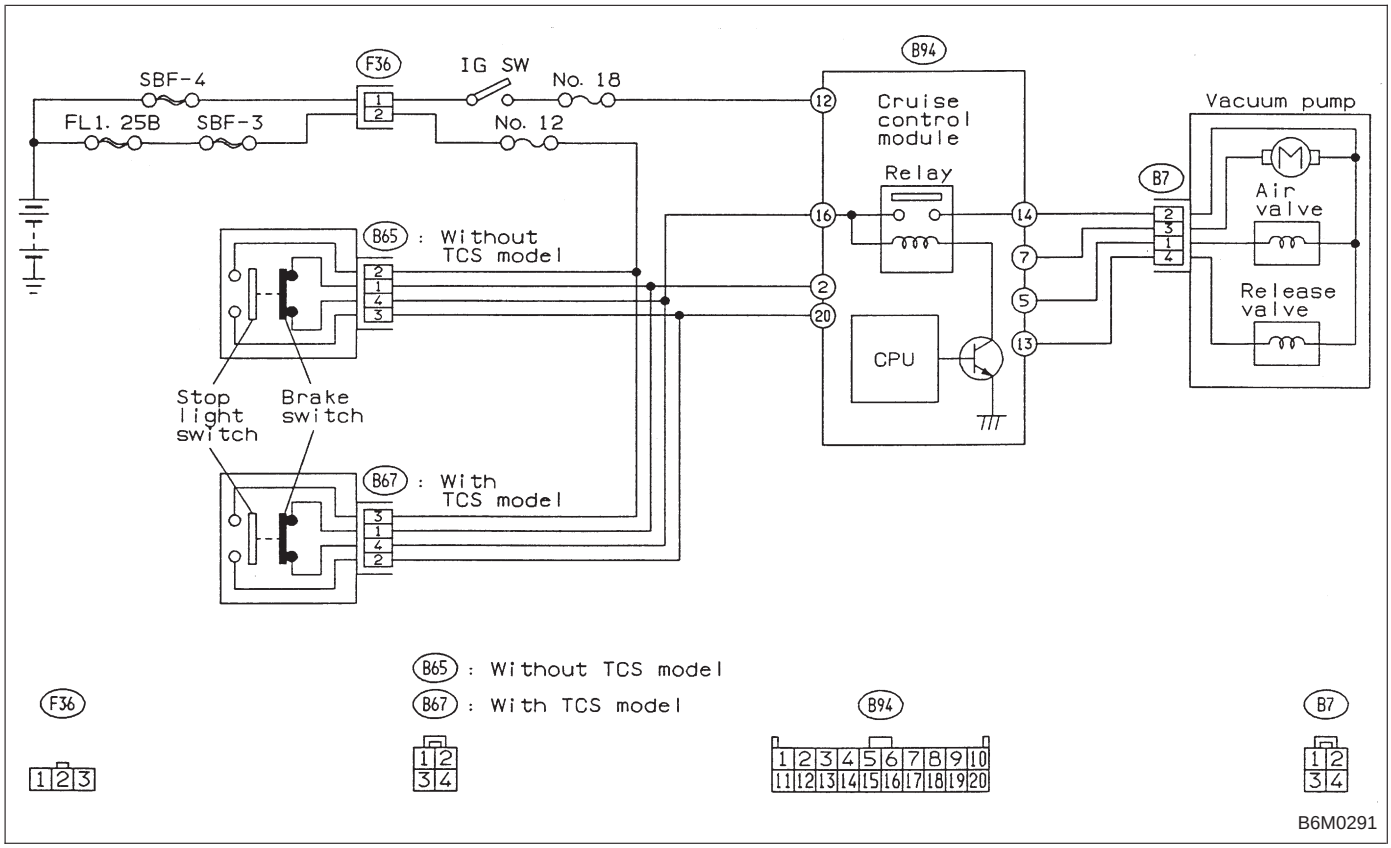

B6M0291

CANCEL (FB0)

31 MOTOR NG

B6M0200

G: TROUBLE CODE 31, 32 AND 33 — VACUUM PUMP, AIR VALVE, RELEASE VALVE —

DIAGNOSIS:

- Open or poor contact of vacuum pump motor, air valve and release valve.

TROUBLE SYMPTOM:

- Cruise control cannot be set. (Cancelled immediately.)

1. Measure resistance of vacuum pump motor, air valve and release valve.

Not OK → Malfunction in vacuum pump motor, air valve and release valve.

OK ↓

2. Perform a circuit test in harness between cruise control module and vacuum pump motor, air valve, release valve.

Not OK → Repair or replace wiring harness.

OK ↓

Failure of the cruise control module.
(Check input and output voltage.)

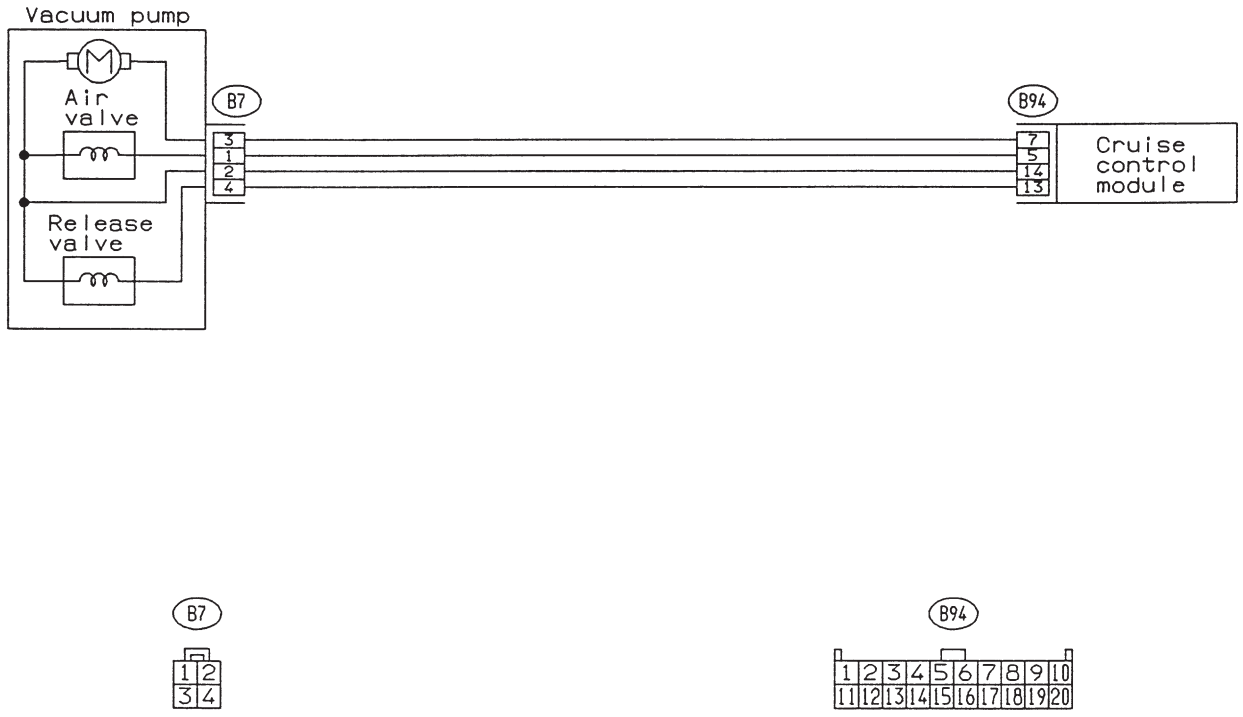

B6M0292

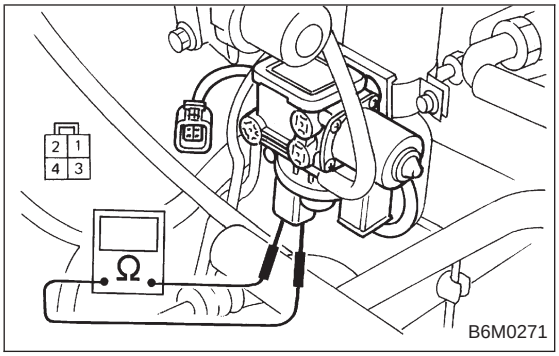

1. MEASURE RESISTANCE OF VACUUM PUMP MOTOR, AIR VALVE AND RELEASE VALVE.

1) Disconnect connector of vacuum pump and valve.
2) Measure resistance of vacuum pump motor, air valve and release valve.

Terminals / Specified resistance:
No. 2 — No. 3 / 46 Ω (Vacuum pump motor)
No. 2 — No. 1 / 69 Ω (Air valve)
No. 2 — No. 4 / 69 Ω (Release valve)

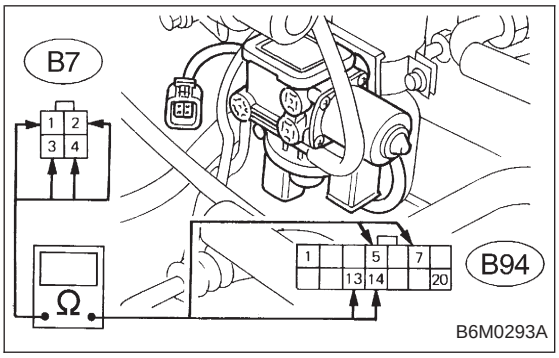

2. PERFORM A CIRCUIT TEST IN HARNESS BETWEEN CRUISE CONTROL MODULE AND VACUUM PUMP MOTOR, AIR VALVE, RELEASE VALVE.

1) Disconnect connectors from cruise control module, vacuum pump and valve.
2) Measure resistance of harness connector between cruise control module, vacuum pump motor, air valve and release valve.

Connector & terminal / Specified resistance:
(B7) No. 1 — (B94) No. 5 / 10 Ω, max.
(B7) No. 2 — (B94) No. 14 / 10 Ω, max.
(B7) No. 3 — (B94) No. 7 / 10 Ω, max.
(B7) No. 4 — (B94) No. 13 / 10 Ω, max.