1. Supplemental Restraint System “Airbag”

Airbag system wiring harness is routed near the cruise control command switch.

CAUTION:

- **All Airbag system wiring harness and connectors are colored yellow. Do not use electrical test equipment on these circuits.**
- **Be careful not to damage Airbag system wiring harness when servicing the cruise control command switch.**

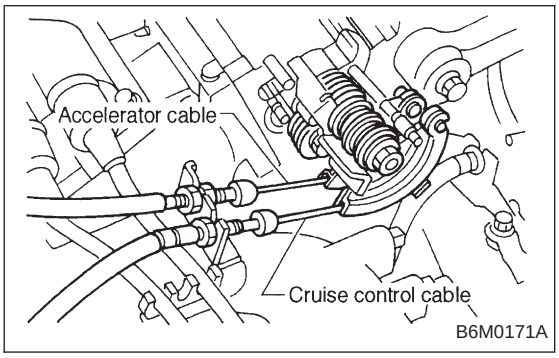

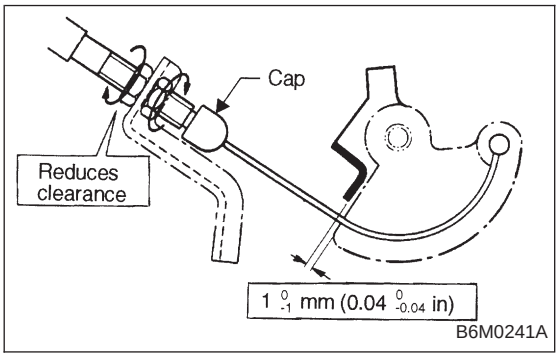

2. Pre-inspection

1. CRUISE CONTROL CABLE

1) Cable installation
   (1) Ensure that cruise control cable is attached to the left of accelerator cable (on accelerator pedal side).
   (2) Ensure that accelerator cable throttle cam does not move when cruise control throttle cam is moved by hand.
   (3) Ensure that throttle cam moves smoothly.
2) Cable free play
   (1) Ensure that throttle cam-to-lever clearance is within specifications.

Standard value: $1\,^{0}_{-1}$ mm ($0.04\,^{0}_{-0.04}$ in)

NOTE:
If clearance is not within specifications, adjust cable at its outer end.

   (2) Ensure that cap is positioned in groove.

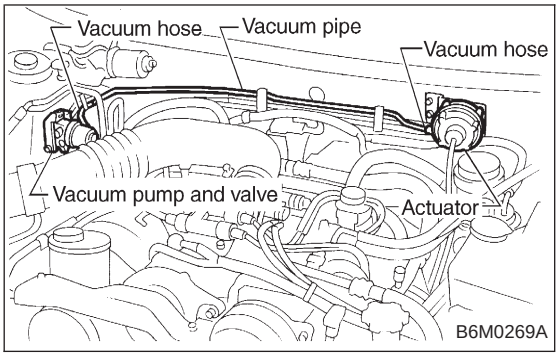

2. VACUUM HOSE AND PIPE

Check vacuum hose and pipe (which connects actuator and vacuum pump) for disconnection or cracks.

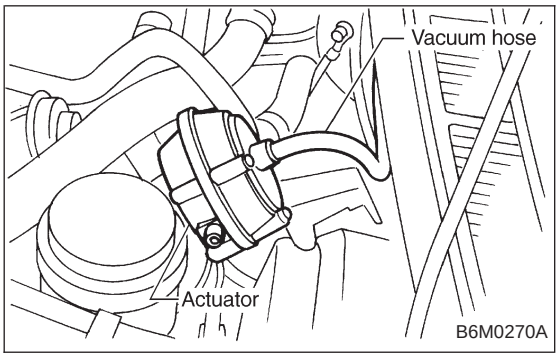

3. ACTUATOR

1) Disconnect vacuum hose from actuator.

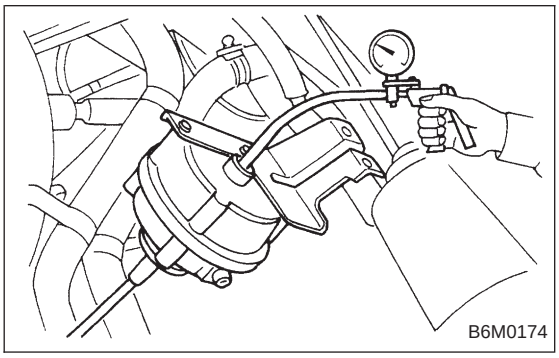

2) Connect vacuum pump as shown in figure.
3) Make sure that cruise control cable moves smoothly and quickly when a vacuum pressure of 40.0 kPa (300 mmHg, 11.81 inHg) is applied to actuator.

Stroke: 35 mm (1.38 in)

4) When vacuum pressure is released from condition 3) above, make sure the cable returns to its original position smoothly and quickly.
5) After inspection, disconnect vacuum pump and connect vacuum hose.

4. POWER SUPPLY

1) Measure battery voltage and specific gravity of electrolyte.

Standard voltage: 12 V
Specific gravity: Above 1.260

2) Check the condition of the main and other fuses, and harnesses and connectors. Also check for proper grounding.

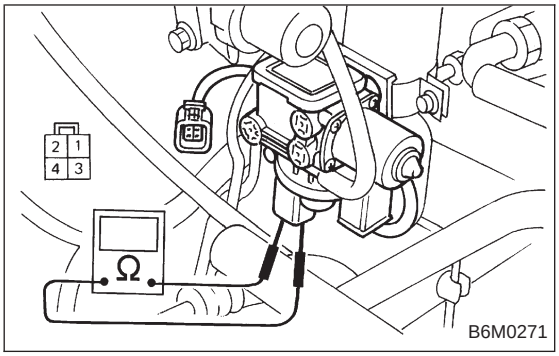

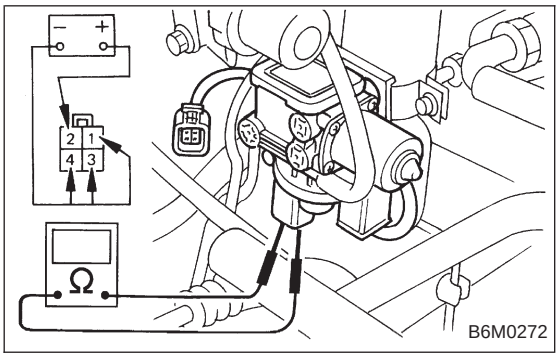

5. VACUUM PUMP AND VALVE

1) Measure resistance of vacuum pump and valve.
   (1) Disconnect connector from vacuum pump and valve.
   (2) Measure resistance between each terminal of vacuum pump and valve.

Terminals / Specified resistance:
No. 2 — No. 3 / 100 Ω or less (Vacuum pump motor)
No. 2 — No. 1 / 69 Ω (Air valve)
No. 2 — No. 4 / 69 Ω (Release valve)

2) Check for leakage and sticking of vacuum valve.
   (1) Disconnect connector from vacuum pump and valve.
   (2) Make sure that cruise control cable moves smoothly when connecting + (positive) battery cable to terminal No. 2 and − (negative) battery cable to terminals No. 1, 3 and 4 of vacuum pump and valve connector.

Stroke: 35 mm (1.38 in)
Movement time: Within 3 seconds

   (3) When the battery cable is disconnected from condition (2) above, make sure the cable returns to its original position smoothly.

Movement time: Within 1.5 seconds

   (4) Connect battery to each terminal and check cable movement.

Terminal No.				Battery		Cruise control cable operation
1	2	3	4	⊕	⊖	
—	—	—	—	—	—	—
	○			○		Pull
		○			○	
○					○	
			○		○	
	○			○		Hold
○					○	
			○		○	
	○			○		Release
			○		○	