1. Supplemental Restraint System “Airbag”

Airbag system wiring harness is routed near the cruise control command switch.

CAUTION:

- **All Airbag system wiring harness and connectors are colored yellow. Do not use electrical test equipment on these circuits.**
- **Be careful not to damage Airbag system wiring harness when servicing the cruise control command switch.**

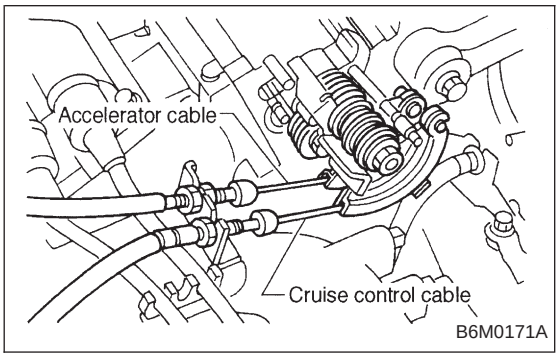

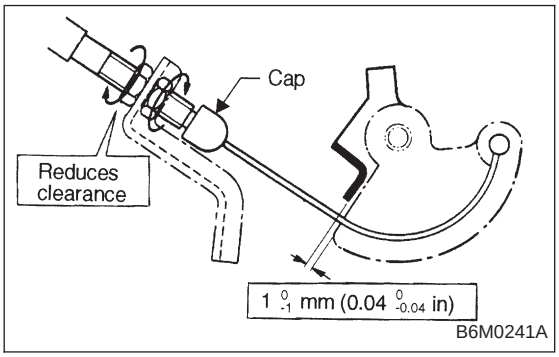

2. Pre-inspection

1. CRUISE CONTROL CABLE

1) Cable installation
   (1) Ensure that cruise control cable is attached to the left of accelerator cable (on accelerator pedal side).
   (2) Ensure that accelerator cable throttle cam does not move when cruise control throttle cam is moved by hand.
   (3) Ensure that throttle cam moves smoothly.
2) Cable free play
   (1) Ensure that throttle cam-to-lever clearance is within specifications.

Standard value: $1\,^{0}_{-1}$ mm ($0.04\,^{0}_{-0.04}$ in)

NOTE:
If clearance is not within specifications, adjust cable at its outer end.

   (2) Ensure that cap is positioned in groove.