10. Diagnostic Chart with Trouble Code for LHD Vehicles

A: DIAGNOSTIC TROUBLE CODE (DTC) LIST

DTC No.	Abbreviation (Subaru Select Monitor)	Item	Page
P0101	QA—RLOW	Mass air flow sensor circuit range/performance problem (low input)	132
P0102	QA—LOW	Mass air flow sensor circuit low input	134
P0103	QA—HI	Mass air flow sensor circuit high input	138
P0106	PS—R2	Pressure sensor circuit range/performance problem	141
P0107	P—SLOW	Pressure sensor circuit low input	145
P0108	P—SHI	Pressure sensor circuit high input	149
P0116	TW—LOW	Engine coolant temperature sensor circuit low input	154
P0117	TW—HI	Engine coolant temperature sensor circuit high input	157
P0121	TH—RHI	Throttle position sensor circuit range/performance problem (high input)	160
P0122	THV—LOW	Throttle position sensor circuit low input	162
P0123	THV—HI	Throttle position sensor circuit high input	167
P0125	TW—CL	Insufficient coolant temperature for closed loop fuel control	170
P0130	FO2—V	Front oxygen sensor circuit malfunction	172
P0133	FO2—R	Front oxygen sensor circuit slow response	175
P0135	FO2H	Front oxygen sensor heater circuit malfunction	177
P0136	RO2—V	Rear oxygen sensor circuit malfunction	181
P0139	RO2—R	Rear oxygen sensor circuit slow response	184
P0141	RO2H	Rear oxygen sensor heater circuit malfunction	186
P0170	FUEL	Fuel trim malfunction	190
P0181	TNKT—F	Fuel temperature sensor A circuit range/performance problem	195
P0182	TNKT—LOW	Fuel temperature sensor A circuit low input	197
P0183	TNKT—HI	Fuel temperature sensor A circuit high input	200
P0261	INJ1	Fuel injector circuit low input - #1	203
P0262	INJ1—HI	Fuel injector circuit high input - #1	207
P0264	INJ2	Fuel injector circuit low input - #2	203
P0265	INJ2—HI	Fuel injector circuit high input - #2	207
P0267	INJ3	Fuel injector circuit low input - #3	203
P0268	INJ3—HI	Fuel injector circuit high input - #3	207
P0270	INJ4	Fuel injector circuit low input - #4	203
P0271	INJ4—HI	Fuel injector circuit high input - #4	207
P0301	MIS—1	Cylinder 1 misfire detected	211
P0302	MIS—2	Cylinder 2 misfire detected	211
P0303	MIS—3	Cylinder 3 misfire detected	211
P0304	MIS—4	Cylinder 4 misfire detected	211
P0325	KNOCK	Knock sensor circuit malfunction	219
P0335	CRANK	Crankshaft position sensor circuit malfunction	222
P0336	CRANK—R	Crankshaft position sensor circuit range/performance problem	225
P0340	CAM	Camshaft position sensor circuit malfunction	227

DTC No.	Abbreviation (Subaru Select Monitor)	Item	Page
P0341	CAM—R	Camshaft position sensor circuit range/performance problem	230
P0400	EGR	Exhaust gas recirculation flow malfunction	232
P0403	EGRSOL	Exhaust gas recirculation circuit low input	237
P0420	CAT	Catalyst system efficiency below threshold	240
P0440	EVAP	Evaporative emission control system malfunction	242
P0441	CPC—F	Evaporative emission control system incorrect purge flow	246
P0443	CPC	Evaporative emission control system purge control valve circuit low input	248
P0446	VCMSOL—LO	Evaporative emission control system vent control low input	251
P0451	TNKP—F	Evaporative emission control system pressure sensor range/performance problem	254
P0452	TNKP—LOW	Evaporative emission control system pressure sensor low input	256
P0453	TNKP—HI	Evaporative emission control system pressure sensor high input	261
P0461	FLVL—R	Fuel level sensor circuit range/performance problem	267
P0462	FLVL—LOW	Fuel level sensor circuit low input	269
P0463	FLVL—HI	Fuel level sensor circuit high input	275
P0500	VSP	Vehicle speed sensor malfunction	281
P0505	ISC	Idle control system malfunction	283
P0506	ISC—RLOW	Idle control system RPM lower than expected	289
P0507	ISC—RHI	Idle control system RPM higher than expected	291
P0600	—	Serial communication link malfunction	293
P0601	RAM	Internal control module memory check sum error	295
P0703	ATBRK	Brake switch input malfunction	296
P0705	ATRNG	Transmission range sensor circuit malfunction	299
P0710	ATF	Transmission fluid temperature sensor circuit malfunction	311
P0720	ATVSP	Output speed sensor (vehicle speed sensor 1) circuit malfunction	312
P0725	ATNE	Engine speed input circuit malfunction	313
P0731	ATGR1	Gear 1 incorrect ratio	314
P0732	ATGR2	Gear 2 incorrect ratio	314
P0733	ATGR3	Gear 3 incorrect ratio	314
P0734	ATGR4	Gear 4 incorrect ratio	314
P0740	ATLU—F	Torque converter clutch system malfunction	317
P0743	ATLU	Torque converter clutch system electrical	321
P0748	ATPL	Pressure control solenoid electrical	322
P0753	ATSFT1	Shift solenoid A electrical	323
P0758	ATSFT2	Shift solenoid B electrical	324
P0760	ATOVR—F	Shift solenoid C malfunction	325
P0763	ATOVR	Shift solenoid C electrical	328
P1100	ST—SWOFF	Starter switch circuit low input	329
P1101	N—SW	Neutral position switch circuit malfunction [MT vehicles]	331
P1101	N—SWOFF	Neutral position switch circuit high input [AT vehicles]	335
P1102	BR	Pressure sources switching solenoid valve circuit low input	340
P1103	TRQ	Engine torque control signal circuit malfunction	343
P1104	TCS—LOW	TCS signal circuit low input	346

DTC No.	Abbreviation (Subaru Select Monitor)	Item	Page
P1120	ST—SWON	Starter switch circuit high input	348
P1121	N—SWON	Neutral position switch circuit low input [AT vehicles]	350
P1122	BR—HI	Pressure sources switching solenoid valve circuit high input	354
P1124	TCS—HI	TCS signal circuit high input	357
P1141	QA—RHI	Mass air flow sensor circuit range/performance problem (high input)	360
P1142	TH—RLOW	Throttle position sensor circuit range/performance problem (low input)	362
P1143	PS—RLOW	Pressure sensor circuit range/performance problem (low input)	364
P1144	PS—RHI	Pressure sensor circuit range/performance problem (high input)	368
P1400	PCVSOL—LO	Fuel tank pressure control solenoid valve circuit low input	370
P1420	PCVSOL—HI	Fuel tank pressure control solenoid valve circuit high input	374
P1421	EGRSOL—HI	Exhaust gas recirculation circuit high input	377
P1422	CPC—HI	Evaporative emission control system purge control valve circuit high input	380
P1423	VCMSOL—HI	Evaporative emission control system vent control high input	383
P1440	PCV—FLOW	Fuel tank pressure control system function problem (low input)	386
P1441	PCV—FHI	Fuel tank pressure control system function problem (high input)	390
P1442	FLVL—R2	Fuel level sensor circuit range/performance problem 2	393
P1500	FAN—1	Radiator fan relay 1 circuit low input	395
P1502	FAN—F	Radiator fan function problem	401
P1507	ISC—SHI	Idle control system malfunction (fail-safe)	403
P1520	FAN—1HI	Radiator fan relay 1 circuit high input	405
P1540	VSP—S	Vehicle speed sensor malfunction 2	407
P1700	ATTH	Throttle position sensor circuit malfunction for automatic transmission	409
P1701	ATCRS	Cruise control set signal circuit malfunction for automatic transmission	411
P1702	ATDIAG—LO	Automatic transmission diagnosis input signal circuit low input	413
P1722	ATDIAG—HI	Automatic transmission diagnosis input signal circuit high input	416
P1742	ATDIAG—2	Automatic transmission diagnosis input signal circuit malfunction	419

OBD (FB1)

P0101 <QA_RLOW>

B2M1056

B: DTC P0101 — MASS AIR FLOW SENSOR CIRCUIT RANGE/PERFORMANCE PROBLEM (LOW INPUT) —

DTC DETECTING CONDITION:

- Two consecutive driving cycles with fault

TROUBLE SYMPTOM:

- Erroneous idling
- Engine stalls.
- Poor driving performance

WIRING DIAGRAM:

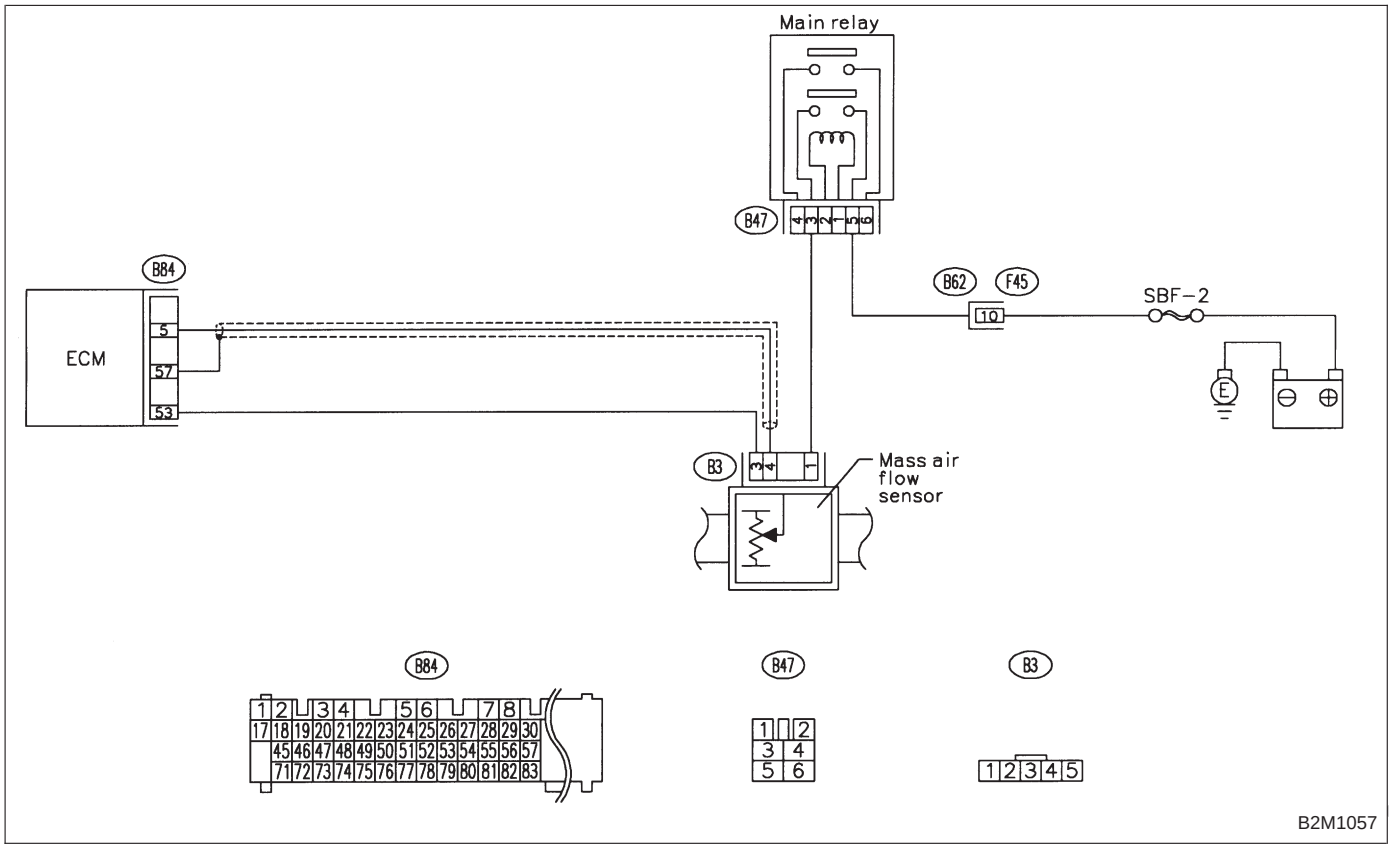

B2M1057

CAUTION:
After repair or replacement of faulty parts, conduct CLEAR MEMORY and INSPECTION MODES.
<Ref. to 2-7 [T3D0] and [T3E0].>

10B1	CHECK DTC P0102 OR P0103 ON DISPLAY.

CHECK : ***Does the Subaru select monitor or OBD-II general scan tool indicate DTC P0102 or P0103?***

YES : Inspect DTC P0102 or P0103 using “10. Diagnostics Chart with Trouble Code”. <Ref. to 2-7 [T10A0].>

NOTE:
In this case, it is not necessary to inspect DTC P0101.

NO : Replace mass air flow sensor.

OBD (FB1)

P0102 <QA_LOW>

B2M1058

C: DTC P0102 — MASS AIR FLOW SENSOR CIRCUIT LOW INPUT —

DTC DETECTING CONDITION:

- Immediately at fault recognition

TROUBLE SYMPTOM:

- Erroneous idling
- Engine stalls.
- Poor driving performance

WIRING DIAGRAM:

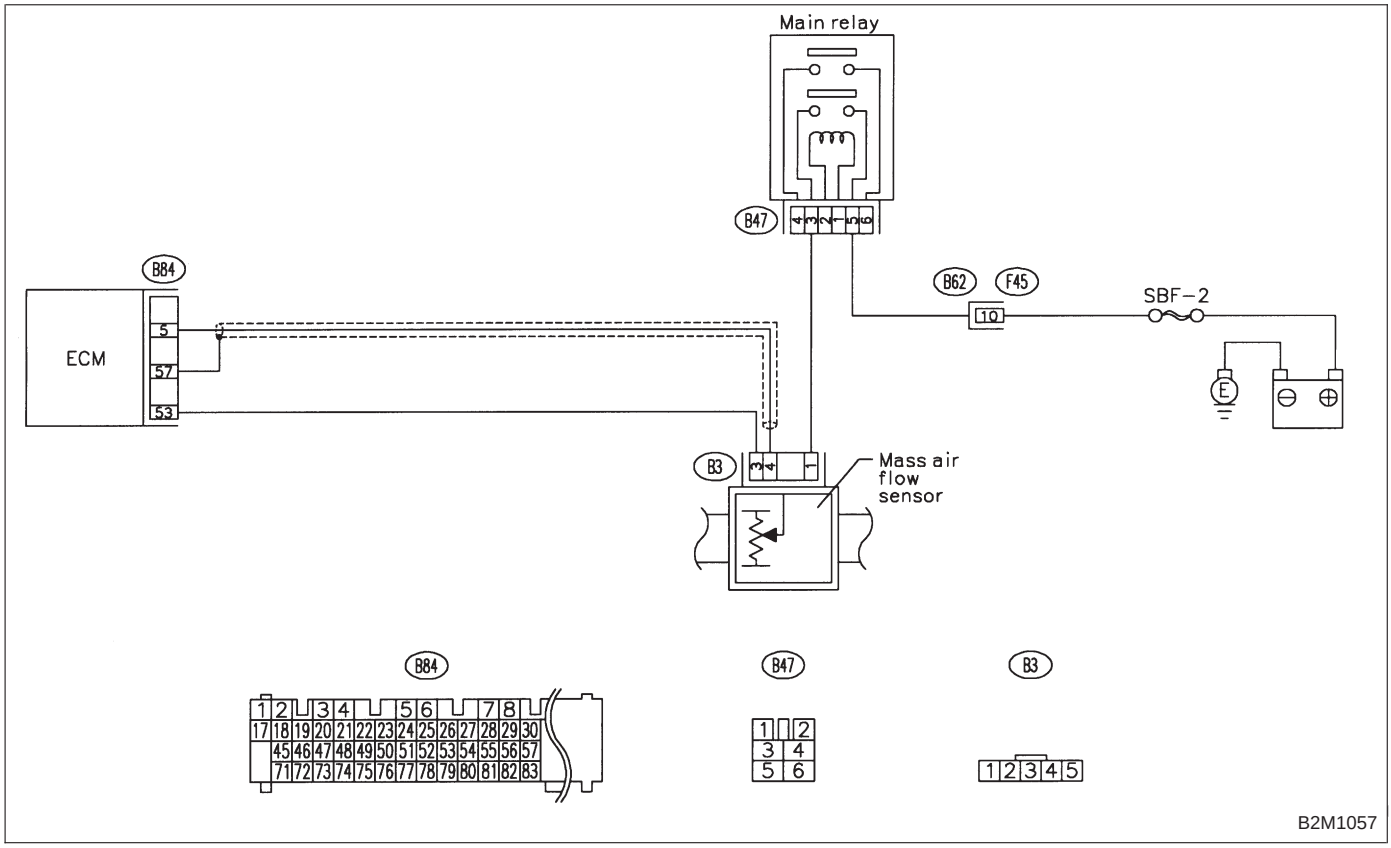

CAUTION:
After repair or replacement of faulty parts, conduct CLEAR MEMORY and INSPECTION MODES.
<Ref. to 2-7 [T3D0] and [T3E0].>

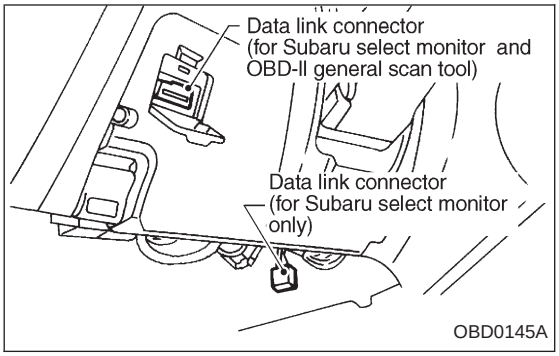

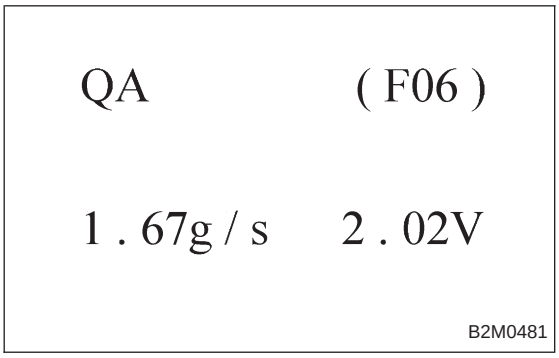

10C1	CONNECT SUBARU SELECT MONITOR OR THE OBD-II GENERAL SCAN TOOL, AND READ DATA.

1) Turn ignition switch to OFF.
2) Connect Subaru Select Monitor or the OBD-II general scan tool to data link connector.
3) Turn ignition switch to ON and Subaru Select Monitor or the OBD-II general scan tool switch to ON.
4) Start engine.

5) Read data on Subaru Select Monitor or OBD-II general scan tool.
● Subaru Select Monitor
Designate mode using function key.

Function mode: F06

● F06: Mass air flow and voltage input from mass air flow sensor are shown on display at the same time.

CHECK : ***Is the value equal to or more than 1.3 g/sec or 0.3 V and equal to or less than 250 g/sec or 5.0 V in function mode F06?***

Probable cause: Poor connect of connectors, circuit and grounding line.

YES : Even if MIL lights up, the circuit has returned to a normal condition at this time. A temporary poor contact of the connector or harness may be the cause. Repair harness or connector in the mass air flow sensor.

NOTE:
In this case, repair the following:
● Open or ground short circuit in harness between mass air flow sensor and ECM connector
● Poor contact in mass air flow sensor or ECM connector

NO : Go to step **10C2**.

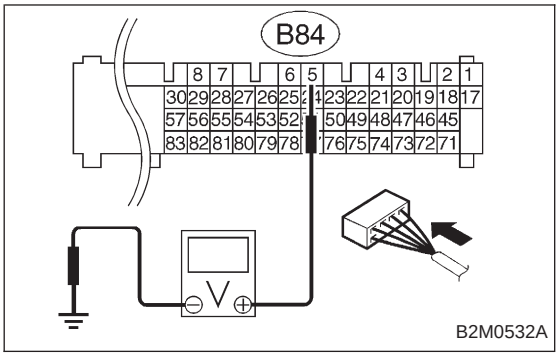

10C2	CHECK INPUT SIGNAL FOR ECM. (USING VOLTAGE METER AND SUBARU SELECT MONITOR.)

Measure voltage between ECM connector and chassis ground while engine is idling.

CHECK : ***Connector & terminal (B84) No. 5 (+) — Chassis ground (−): Is the voltage less than 0.3 V?***

YES : Go to step **10C3**.

NO : Go to next CHECK .

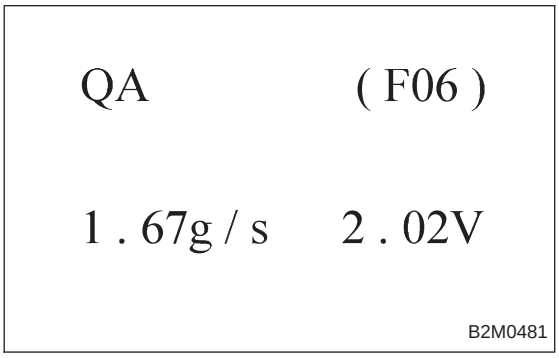

CHECK : ***Does the voltage change more than 0.3 V by shaking harness and connector of ECM while monitoring the value with Subaru select monitor?***

YES : Repair poor contact in ECM connector.

NO : Contact with SOA service.

NOTE:
Inspection by DTM is required, because probable cause is deterioration of multiple parts.

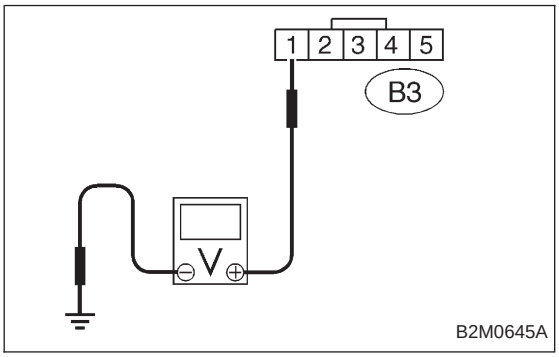

10C3	CHECK POWER SUPPLY TO MASS AIR FLOW SENSOR.

1) Turn ignition switch to OFF.
2) Disconnect connector from mass air flow sensor.
3) Turn ignition switch to ON.
4) Measure voltage between mass air flow sensor connector and engine ground.

CHECK : ***Connector & terminal (B3) No. 1 (+) — Engine ground (−): Is the voltage more than 10 V?***

YES : Go to step **10C4**.

NO : Repair open circuit in harness between main relay and mass air flow sensor connector.

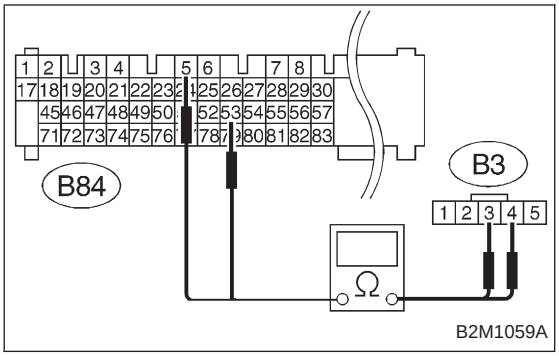

10C4	CHECK HARNESS BETWEEN ECM AND MASS AIR FLOW SENSOR CONNECTOR.

1) Turn ignition switch to OFF.
2) Disconnect connector from ECM.
3) Measure resistance of harness between ECM and mass air flow sensor connector.

CHECK : ***Connector & terminal (B84) No. 5 — (B3) No. 4: Is the resistance less than 1 Ω?***

YES : Go to next CHECK .

NO : Repair harness and connector.

NOTE:
In this case, repair the following:
- Open circuit in harness between ECM and mass air flow sensor connector
- Poor contact in mass air flow sensor connector
- Poor contact in ECM connector

CHECK : ***Connector & terminal (B84) No. 53 — (B3) No. 3: Is the resistance less than 1 Ω?***

YES : Go to step **10C5**.

NO : Repair harness and connector.

NOTE:
In this case, repair the following:
- Open circuit in harness between ECM and mass air flow sensor connector
- Poor contact in mass air flow sensor connector
- Poor contact in ECM connector

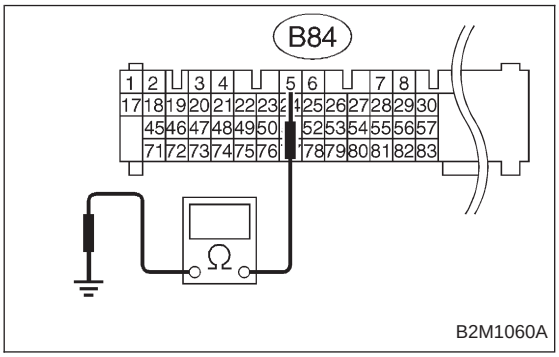

10C5	CHECK HARNESS BETWEEN ECM AND MASS AIR FLOW SENSOR CONNECTOR.

Measure resistance of harness between ECM connector and chassis ground.

CHECK : ***Connector & terminal (B84) No. 5 — Chassis ground: Is the resistance more than 1 MΩ?***

YES : Replace mass air flow sensor.

NO : Repair ground short circuit in harness between ECM and mass air flow sensor connector.

OBD (FB1)
P0103 <QA_HI>
B2M1061

D: DTC P0103 — MASS AIR FLOW SENSOR CIRCUIT HIGH INPUT —

DTC DETECTING CONDITION:

- Immediately at fault recognition

TROUBLE SYMPTOM:

- Erroneous idling
- Engine stalls.
- Poor driving performance

WIRING DIAGRAM:

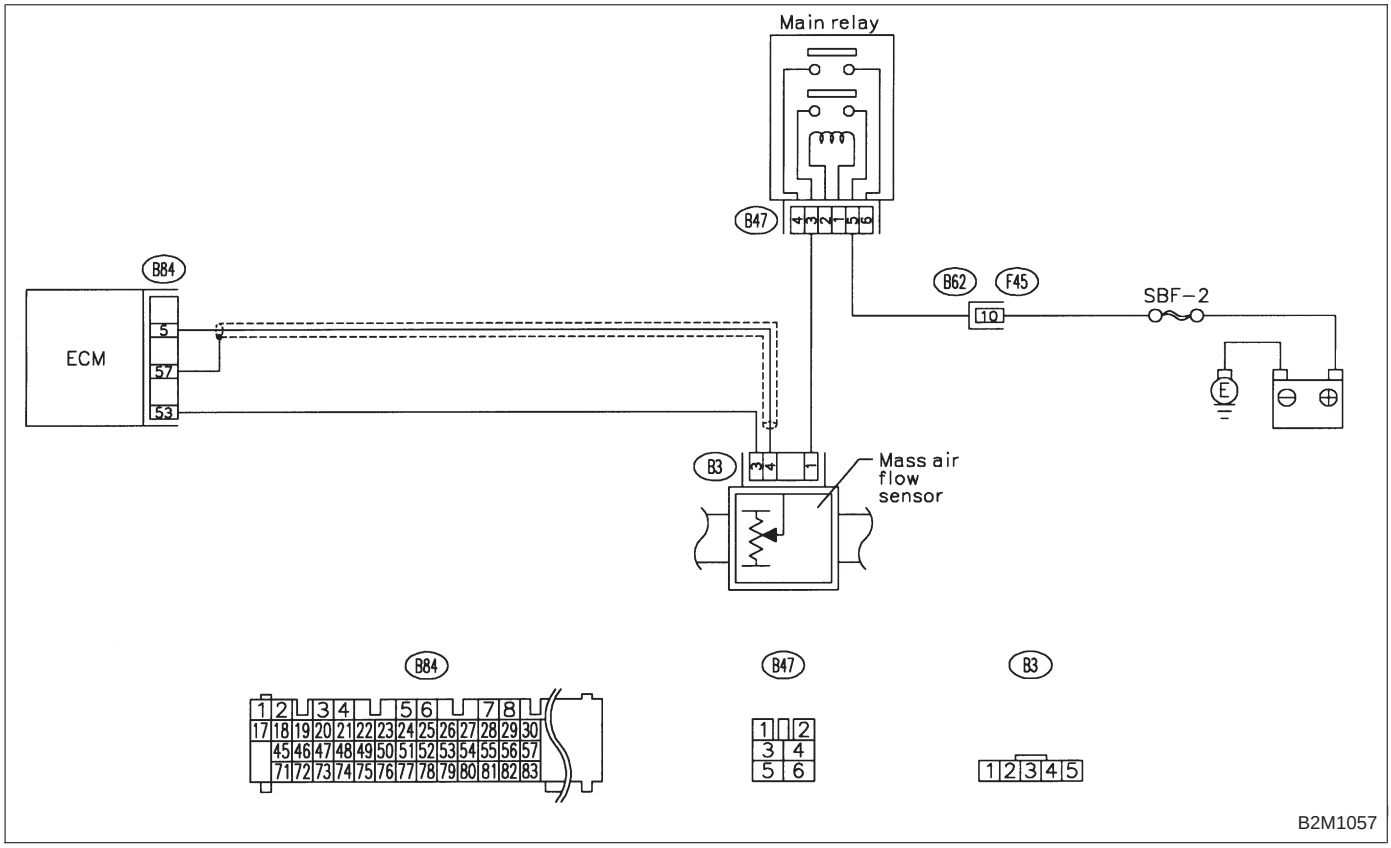

CAUTION:
After repair or replacement of faulty parts, conduct CLEAR MEMORY and INSPECTION MODES.
<Ref. to 2-7 [T3D0] and [T3E0].>

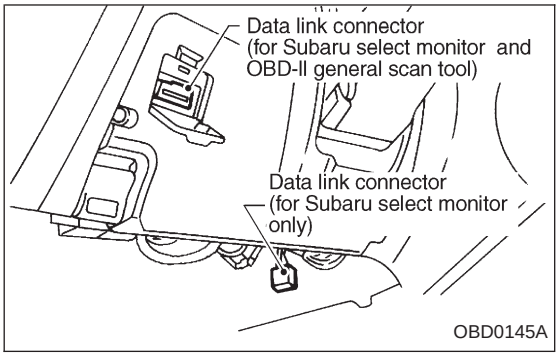

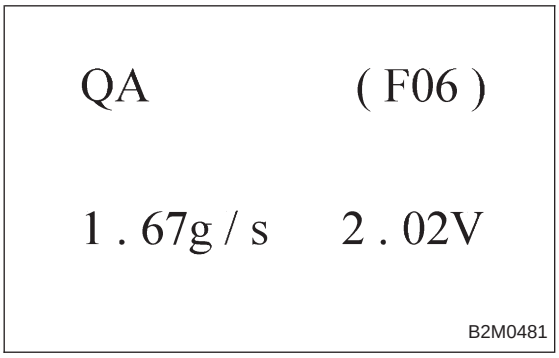

10D1	CONNECT SUBARU SELECT MONITOR OR THE OBD-II GENERAL SCAN TOOL, AND READ DATA.

1) Turn ignition switch to OFF.
2) Connect Subaru Select Monitor or the OBD-II general scan tool to data link connector.
3) Turn ignition switch to ON and Subaru Select Monitor or the OBD-II general scan tool switch to ON.
4) Start engine.

5) Read data on Subaru Select Monitor or OBD-II general scan tool.
● Subaru Select Monitor
Designate mode using function key.

Function mode: F06

● F06: Mass air flow and voltage input from mass air flow sensor are shown on display at the same time.

CHECK : ***Is the value equal to or more than 1.3 g/sec or 0.3 V and equal to or less than 250 g/sec or 5.0 V in function mode F06?***

Probable cause: Poor connect of connectors, circuit and grounding line.

YES : Even if MIL lights up, the circuit has returned to a normal condition at this time.

NO : Go to step **10D2**.

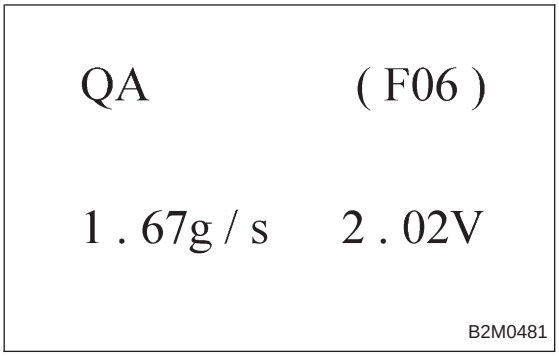

10D2	CHECK HARNESS BETWEEN ECM AND MASS AIR FLOW SENSOR CONNECTOR.

1) Turn ignition switch to OFF and Subaru Select Monitor or the OBD-II general scan tool switch to OFF.
2) Disconnect connector from mass air flow sensor.
3) Turn ignition switch to ON and Subaru Select Monitor or the OBD-II general scan tool switch to ON.
4) Read data on Subaru select monitor or OBD-II general scan tool.

● Subaru Select Monitor
Designate mode using function key.

Function mode: F06

CHECK ***: Is the value more than 250 g/sec or 5 V in function mode F06?***

YES : Repair battery short circuit in harness between mass air flow sensor and ECM connector. After repair, replace ECM.

NO : Replace mass air flow sensor.

● OBD-II general scan tool
For detailed operation procedures, refer to OBD-II General Scan Tool Instruction Manual.

OBD (FB1)

P0106 <PS_R2>

B2M1062

E: DTC P0106 — PRESSURE SENSOR CIRCUIT RANGE/PERFORMANCE PROBLEM —

DTC DETECTING CONDITION:

- Two consecutive driving cycles with fault

WIRING DIAGRAM:

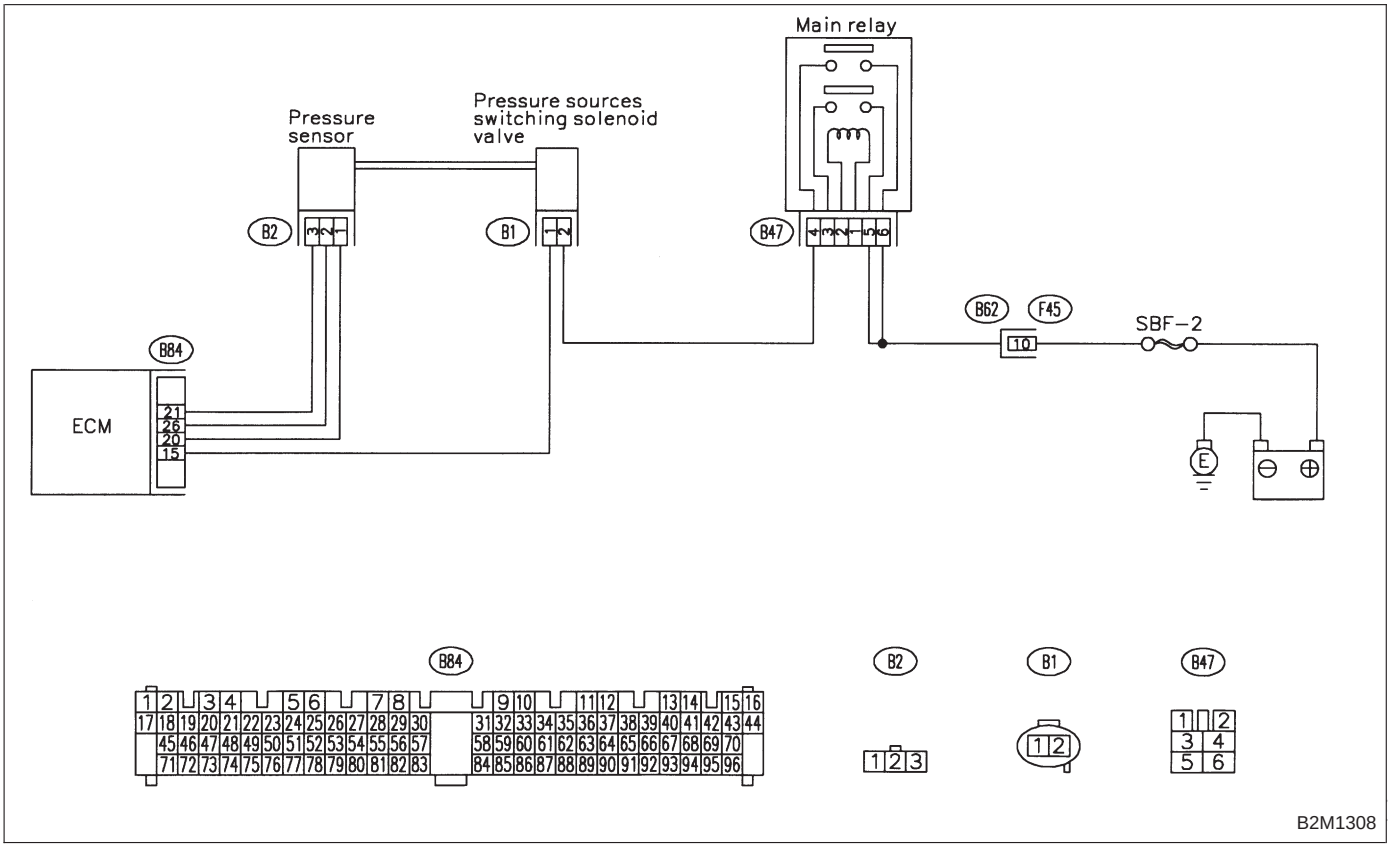

CAUTION:
After repair or replacement of faulty parts, conduct CLEAR MEMORY and INSPECTION MODES.
<Ref. to 2-7 [T3D0] and [T3E0].>

10E1	CHECK DTC P0107, P0108, P1102 OR P1122 ON DISPLAY.

CHECK : ***Does the Subaru select monitor or OBD-II general scan tool indicate DTC P0107, P0108, P1102 OR P1122?***

YES : Inspect DTC P0107, P0108, P1102 OR P1122 using “10. Diagnostics Chart with Trouble Code”. <Ref. to 2-7 [T10A0].>

NOTE:
In this case, it is not necessary to inspect DTC P0106.

NO : Go to step **10E2**.

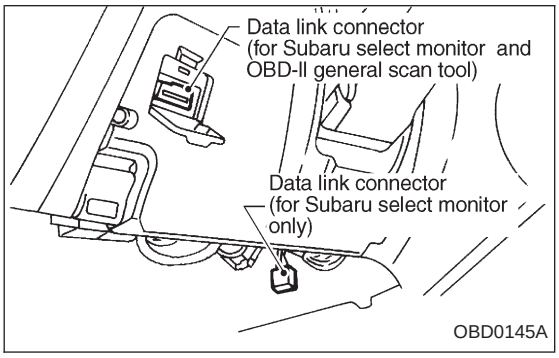

10E2	CHECK DATA FOR CONTROL.

1) Turn ignition switch to OFF.
2) Connect Subaru Select Monitor or the OBD-II general scan tool to data link connector.
3) Turn ignition switch ON and Subaru Select Monitor or the OBD-II general scan tool switch ON.
4) Start engine.

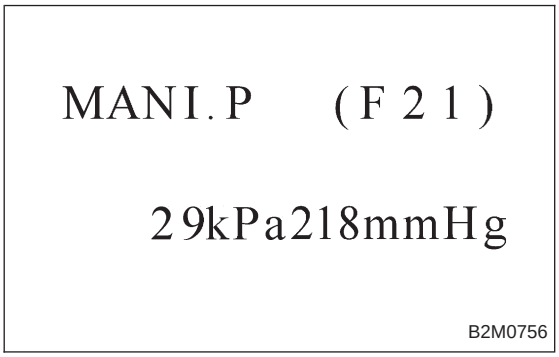

5) Read data on Subaru Select Monitor or the OBD-II general scan tool.

- Subaru Select Monitor

Designate mode using function key.

Function mode: F21 and F20

- F21: Display shows pressure signal value sent from the pressure sensor.
- F20: Display shows pressure signal value sent from the pressure sensor.

CHECK : ***Is the value more than 85 kPa in function mode F21?***

YES : Go to step **10E3**.

NO : Go to next CHECK .

BARO. P (F 20)

100kPa752mmHg

B2M0755

CHECK : ***Is the value less than 32 kPa in function mode F20?***

YES : Go to step **10E4**.

NO : Go to next CHECK .

BARO. P (F 20)

100kPa752mmHg

B2M0755

CHECK : ***Is the value more than 133 kPa in function mode F20?***

YES : Replace pressure sensor.

NO : Repair poor contact in pressure sensor connector, pressure sources switching solenoid valve connector, and ECM connector.

● OBD-II general scan tool

For detailed operation procedures, refer to the OBD-II General Scan Tool Instruction Manual.

2200 cc AWD except Taiwan spec. vehicles

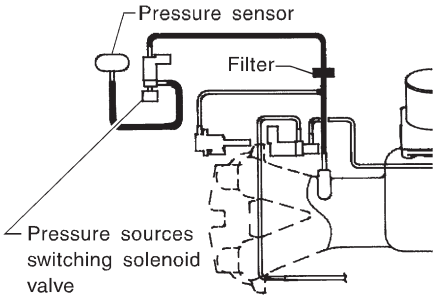

B2M1063A

2200 cc FWD and Taiwan spec. vehicles

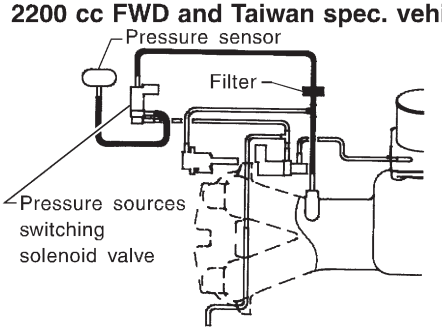

B2M1269A

2500 cc model

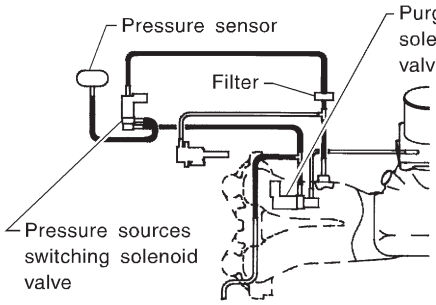

B2M1270A

10E3	CHECK VACUUM HOSE.

CHECK : ***Is there a fault in vacuum hose?***

NOTE:

Check the following items.

● Disconnection of the vacuum hose from pressure sources switching solenoid valve to intake manifold

● Holes in the vacuum hose between pressure sources switching solenoid valve to intake manifold

● Clogging of the vacuum hose between pressure sources switching solenoid valve to intake manifold

● Disconnection of the vacuum hose from pressure sensor to pressure sources switching solenoid valve

● Holes in the vacuum hose between pressure sensor and pressure sources switching solenoid valve

● Clogging of the vacuum hose between pressure sensor and pressure sources switching solenoid valve

● Clogging of the filter

YES : Repair or replace hoses or filter.

NO : Go to step **10E4**.

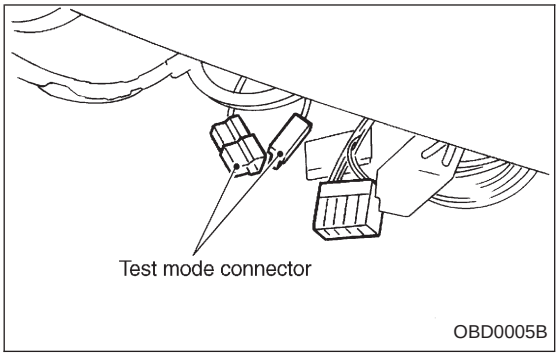

10E4	CHECK PRESSURE SOURCES SWITCHING SOLENOID VALVE.

1) Turn ignition switch to OFF.
2) Connect test mode connector.
3) Turn ignition switch to ON.

CHECK : ***Does pressure sources switching solenoid valve produce operating sound? (ON ↔ OFF each 1.5 sec.)***

NOTE:
Pressure sources switching solenoid valve operation check can also be executed using Subaru Select Monitor (Function mode: FD10). For the procedure, refer to “COMPULSORY VALVE OPERATION CHECK MODE”. <Ref. to 2-7 [T3F0].>

YES : Replace pressure sensor.

NO : Replace pressure sources switching solenoid valve.

OBD (FB1)

P0107 <P_SLOW>

B2M1064

F: DTC P0107 — PRESSURE SENSOR CIRCUIT LOW INPUT —

DTC DETECTING CONDITION:

- Immediately at fault recognition

WIRING DIAGRAM:

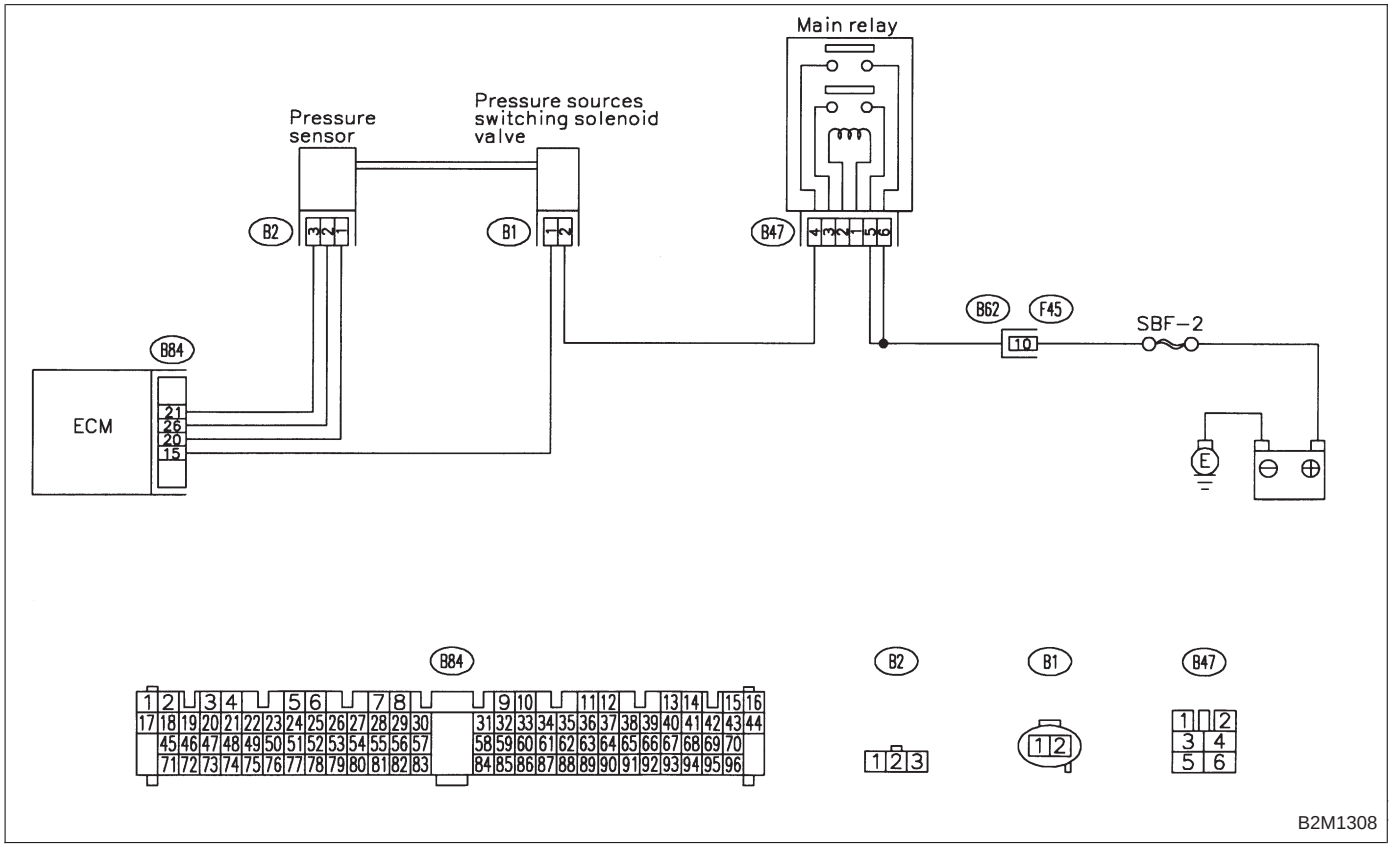

CAUTION:
After repair or replacement of faulty parts, conduct CLEAR MEMORY and INSPECTION MODES.
<Ref. to 2-7 [T3D0] and [T3E0].>

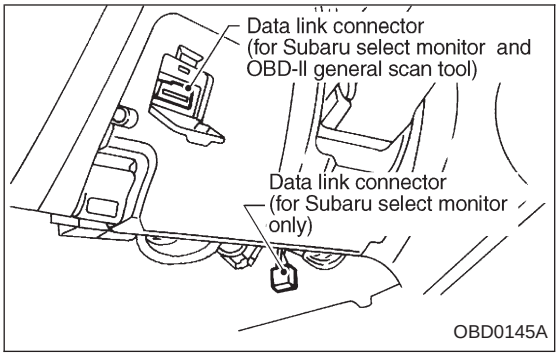

10F1	CONNECT SUBARU SELECT MONITOR OR THE OBD-II GENERAL SCAN TOOL, AND READ DATA.

1) Turn ignition switch to OFF.
2) Connect Subaru Select Monitor or the OBD-II general scan tool to data link connector.
3) Turn ignition switch to ON and Subaru Select Monitor or the OBD-II general scan tool switch to ON.
4) Start engine.

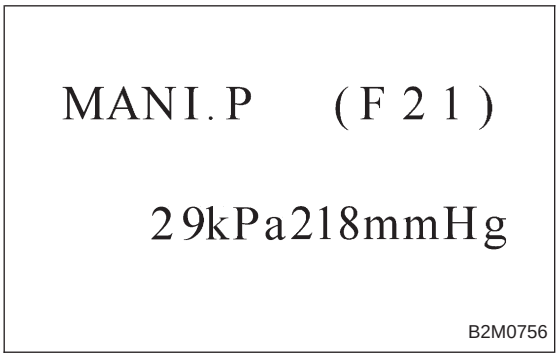

5) Read the data on Subaru Select Monitor or the OBD-II general scan tool.
● Subaru Select Monitor
Designate mode using function key.

Function mode: F21

● F21: Display shows pressure signal value sent from pressure sensor.

CHECK : ***Is the value less than 0 kPa in function mode F21?***

YES : Go to step **10F2**.

NO : Even if MIL lights up, the circuit has returned to a normal condition at this time.

● OBD-II general scan tool

For detailed operation procedures, refer to the OBD-II General Scan Tool Instruction Manual.

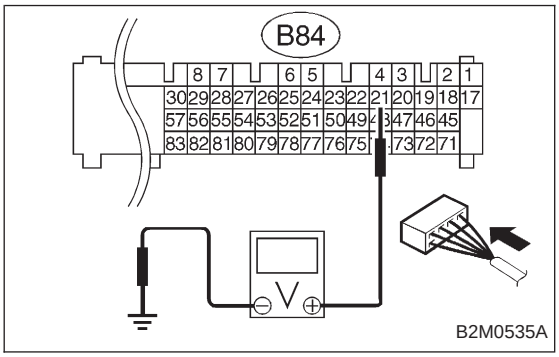

10F2	CHECK INPUT SIGNAL FOR ECM. (USING VOLTAGE METER AND SUBARU SELECT MONITOR.)

1) Measure voltage between ECM connector and chassis ground.

CHECK : ***Connector & terminal (B84) No. 21 (+) — Chassis ground (−): Is the voltage more than 4.5 V?***

YES : Go to next step 2).

NO : Go to next CHECK .

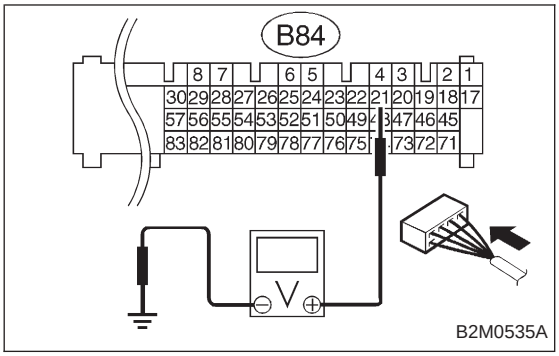

CHECK : ***Does the voltage change more than 4.5 V by shaking harness and connector of ECM while monitoring the value with voltage meter?***

YES : Repair poor contact in ECM connector.

NO : Contact with SOA service.

NOTE:
Inspection by DTM is required, because probable cause is deterioration of multiple parts.

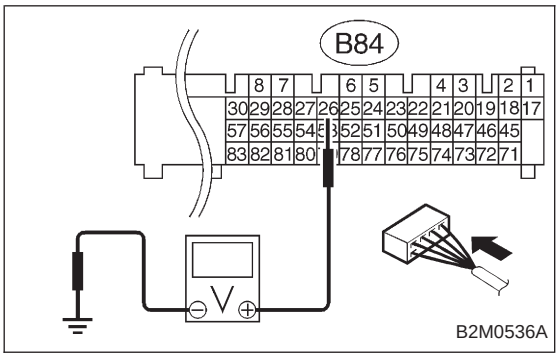

2) Measure voltage between ECM and chassis ground.

CHECK : ***Connector & terminal (B84) No. 26 (+) — Chassis ground (−): Is the voltage less than 0.2 V?***

YES : Go to step **10F3**.

NO : Go to next step 3).

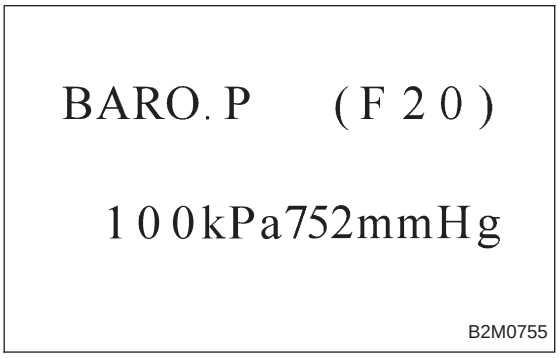

3) Read data on Subaru Select Monitor.

● Subaru Select Monitor

Designate mode using function key.

Function mode: F20

● F20: Display shows pressure signal value sent from pressure sensor.

CHECK : ***Does the value change more than 0 kPa by shaking harness and connector of ECM while monitoring the value with Subaru select monitor?***

YES : Repair poor contact in ECM connector.

NO : Go to step **10F3**.

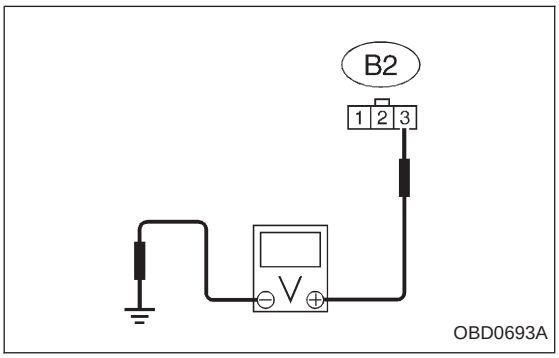

10F3	**CHECK HARNESS BETWEEN ECM AND PRESSURE SENSOR CONNECTOR.**

1) Turn ignition switch to OFF.
2) Disconnect connector from pressure sensor.
3) Turn ignition switch to ON.
4) Measure voltage between pressure sensor connector and engine ground.

CHECK : ***Connector & terminal (B2) No. 3 (+) — Engine ground (−): Is the voltage more than 4.5 V?***

YES : Go to next step 5).

NO : Repair open circuit in harness between ECM and pressure sensor connector.

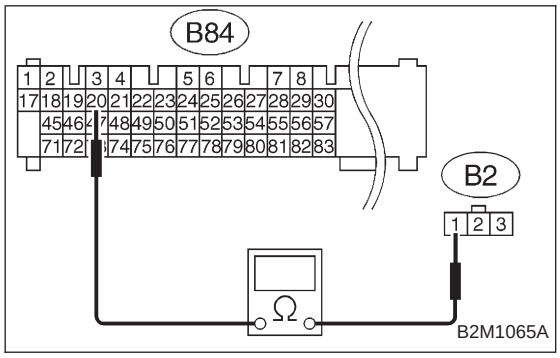

5) Turn ignition switch to OFF.
6) Disconnect connector from ECM.
7) Measure resistance of harness between ECM and pressure sensor connector.

CHECK : ***Connector & terminal (B84) No. 20 — (B2) No. 1: Is the resistance less than 1 Ω?***

YES : Go to next step 8).

NO : Repair open circuit in harness between ECM and pressure sensor connector.

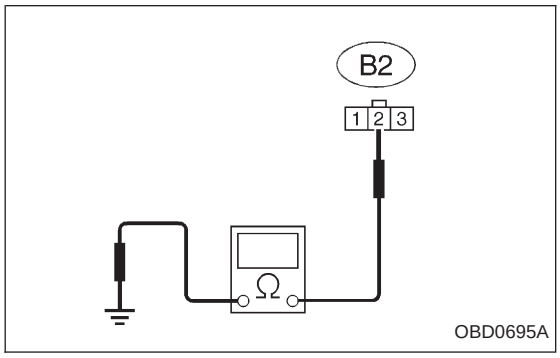

8) Measure resistance of harness between pressure sensor connector and engine ground.

CHECK : ***Connector & terminal (B2) No. 2 — Engine ground: Is the resistance more than 500 kΩ?***

YES : Go to next CHECK .

NO : Repair ground short circuit in harness between ECM and pressure sensor connector.

CHECK : ***Is there poor contact in pressure sensor connector?***

YES : Repair poor contact in pressure sensor connector.

NO : Replace pressure sensor.

OBD (FB1)
P0108 <P_SHI>

B2M1066

G: DTC P0108 — PRESSURE SENSOR CIRCUIT HIGH INPUT —

DTC DETECTING CONDITION:

- Immediately at fault recognition

WIRING DIAGRAM:

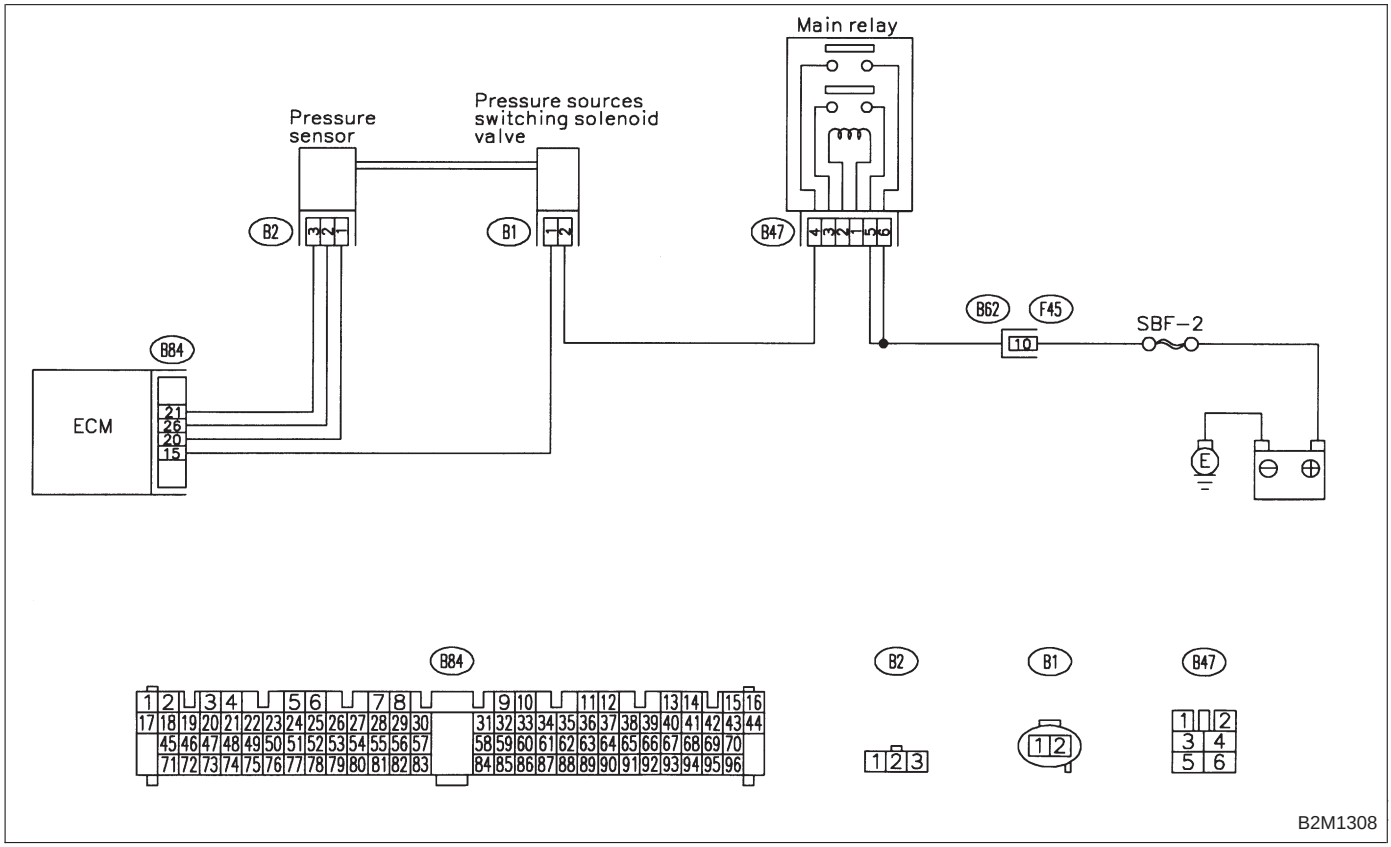

CAUTION:
After repair or replacement of faulty parts, conduct CLEAR MEMORY and INSPECTION MODES.
<Ref. to 2-7 [T3D0] and [T3E0].>

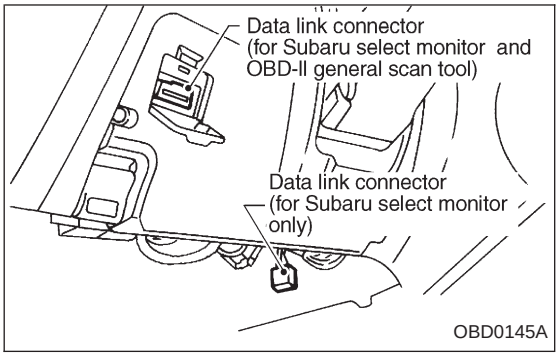

10G1	CONNECT SUBARU SELECT MONITOR OR THE OBD-II GENERAL SCAN TOOL, AND READ DATA.

1) Turn ignition switch to OFF.
2) Connect Subaru Select Monitor or the OBD-II general scan tool to data link connector.
3) Turn ignition switch to ON and Subaru Select Monitor or the OBD-II general scan tool switch to ON.
4) Start engine.

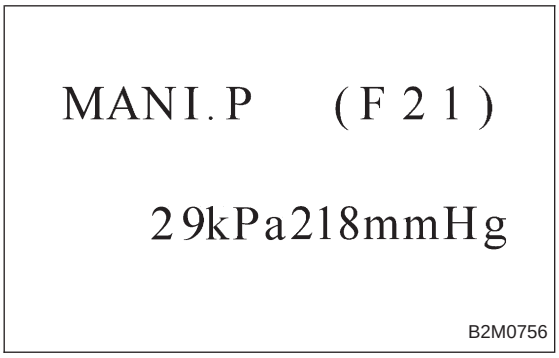

5) Read the data on Subaru Select Monitor or the OBD-II general scan tool.
● Subaru Select Monitor
Designate mode using function key.

Function mode: F21

● F21: Display shows pressure signal value sent from pressure sensor.

CHECK : ***Is the value more than 140 kPa in function mode F21?***

YES : Go to step **10G4**.

NO : Go to step **10G2**.

● OBD-II general scan tool

For detailed operation procedures, refer to the OBD-II General Scan Tool Instruction Manual.

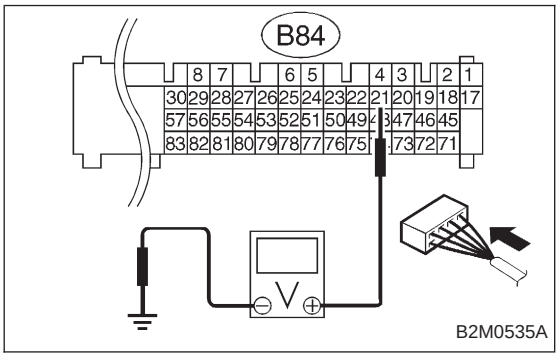

10G2	CHECK INPUT SIGNAL FOR ECM. (USING VOLTAGE METER AND SUBARU SELECT MONITOR.)

1) Measure voltage between ECM connector and chassis ground.

CHECK : ***Connector & terminal (B84) No. 21 (+) — Chassis ground (−): Is the voltage more than 4.5 V?***

YES : Go to next step 2).

NO : Go to next CHECK .

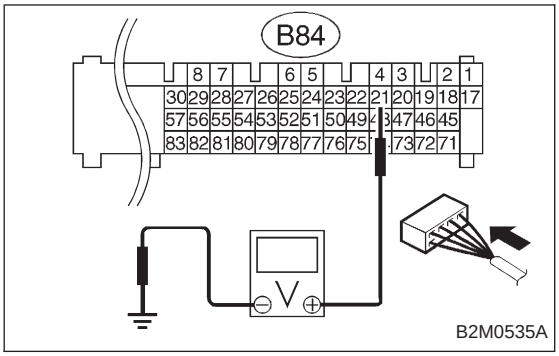

CHECK : ***Does the voltage change more than 4.5 V by shaking harness and connector of ECM while monitoring the value with voltage meter?***

YES : Repair poor contact in ECM connector.

NO : Contact with SOA service.

NOTE:
Inspection by DTM is required, because probable cause is deterioration of multiple parts.

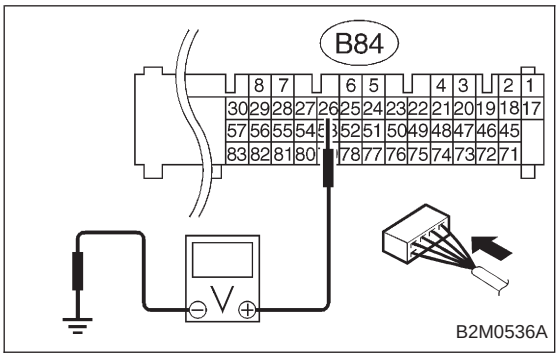

2) Measure voltage between ECM and chassis ground.

CHECK : ***Connector & terminal (B84) No. 26 (+) — Chassis ground (−): Is the voltage less than 0.2 V?***

YES : Go to step **10G3**.

NO : Go to next step 3).

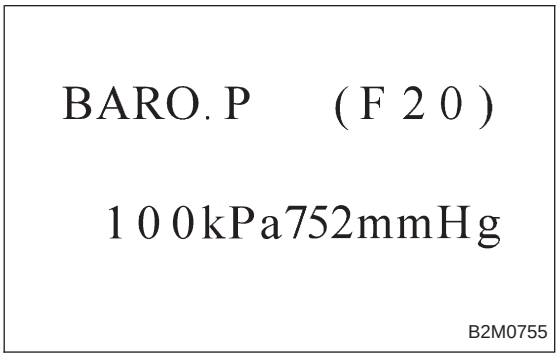

3) Read data on Subaru Select Monitor.

- Subaru Select Monitor

Designate mode using function key.

Function mode: F20

- F20: Display shows pressure signal value sent from pressure sensor.

CHECK : ***Does the value change more than 0 kPa by shaking harness and connector of ECM while monitoring the value with Subaru select monitor?***

YES : Repair poor contact in ECM connector.

NO : Go to step **10G3**.

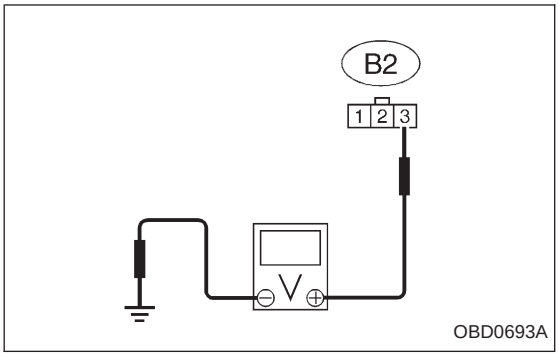

10G3	CHECK HARNESS BETWEEN ECM AND PRESSURE SENSOR CONNECTOR.

1) Turn ignition switch to OFF.
2) Disconnect connector from pressure sensor.
3) Turn ignition switch to ON.
4) Measure voltage between pressure sensor connector and engine ground.

CHECK : ***Connector & terminal (B2) No. 3 (+) — Engine ground (−): Is the voltage more than 4.5 V?***

YES : Go to next step 5).

NO : Repair open circuit in harness between ECM and pressure sensor connector.

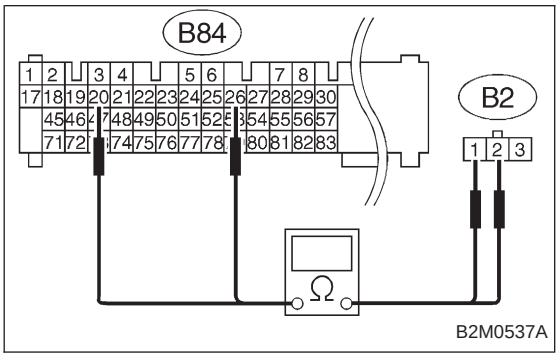

5) Turn ignition switch to OFF.
6) Disconnect connector from ECM.
7) Measure resistance of harness between ECM and pressure sensor connector.

CHECK : ***Connector & terminal (B84) No. 26 — (B2) No. 2: Is the resistance less than 1 Ω?***

YES : Go to next CHECK .

NO : Repair open circuit in harness between ECM and pressure sensor connector.

CHECK : ***Connector & terminal (B84) No. 20 — (B2) No. 1: Is the resistance less than 1 Ω?***

YES : Go to next CHECK .

NO : Repair open circuit in harness between ECM and pressure sensor connector.

CHECK : ***Is there poor contact in pressure sensor connector?***

YES : Repair poor contact in pressure sensor connector.

NO : Replace pressure sensor.

MANI.P (F21)

29kPa218mmHg

B2M0756

10G4	CHECK HARNESS BETWEEN ECM AND PRESSURE SENSOR CONNECTOR.

1) Turn ignition switch to OFF and Subaru Select Monitor or the OBD-II general scan tool switch to OFF.
2) Disconnect connector from pressure sensor.
3) Turn ignition switch to ON and Subaru Select Monitor or the OBD-II general scan tool switch to ON.
4) Read data on Subaru select monitor or the OBD-II general scan tool.

● Subaru Select Monitor

Designate mode using function key.

Function mode: F21

CHECK ***: Is the value more than 140 kPa in function mode F21?***

YES : Repair battery short circuit in harness between ECM and pressure sensor connector.

NO : Replace pressure sensor.

● OBD-II general scan tool

For detailed operation procedures, refer to the OBD-II General Scan Tool Instruction Manual.

OBD (FB1)

P0116 <TW_LOW>

B2M1067

H: DTC P0116 — ENGINE COOLANT TEMPERATURE SENSOR CIRCUIT LOW INPUT —

DTC DETECTING CONDITION:

- Immediately at fault recognition

TROUBLE SYMPTOM:

- Hard to start
- Erroneous idling
- Poor driving performance

WIRING DIAGRAM:

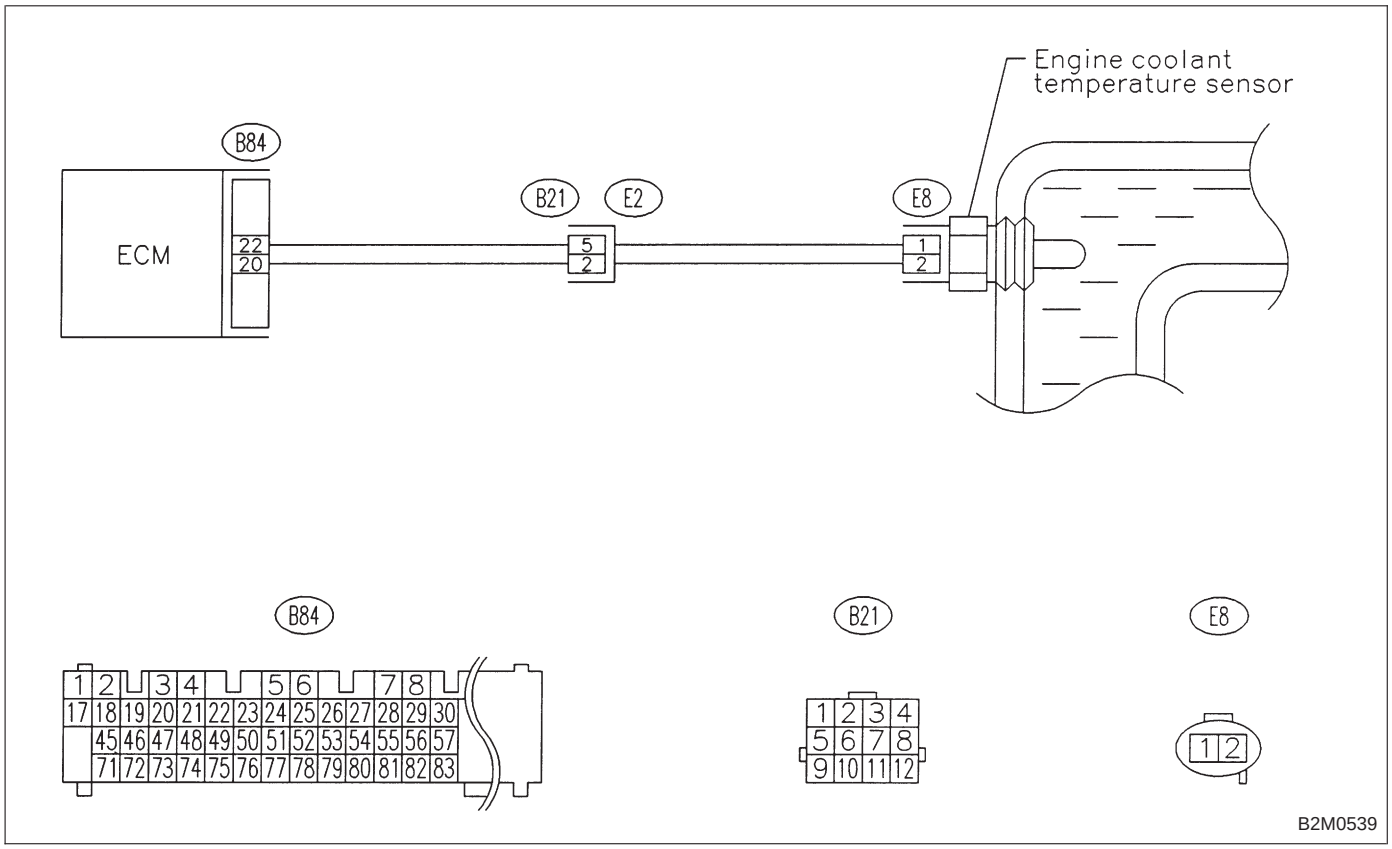

CAUTION:
After repair or replacement of faulty parts, conduct CLEAR MEMORY and INSPECTION MODES.
<Ref. to 2-7 [T3D0] and [T3E0].>

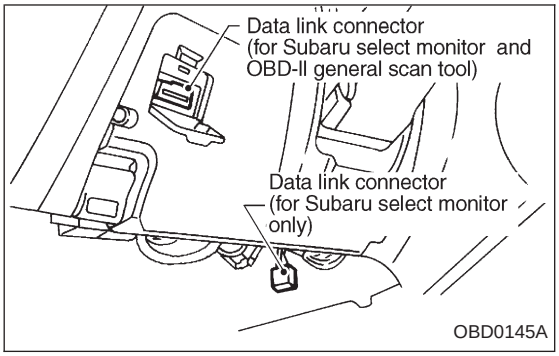

10H1	CONNECT SUBARU SELECT MONITOR OR THE OBD-II GENERAL SCAN TOOL, AND READ DATA.

1) Turn ignition switch to OFF.
2) Connect Subaru Select Monitor or the OBD-II general scan tool to data link connector.
3) Turn ignition switch to ON and Subaru Select Monitor or OBD-II general scan tool switch to ON.
4) Start engine.

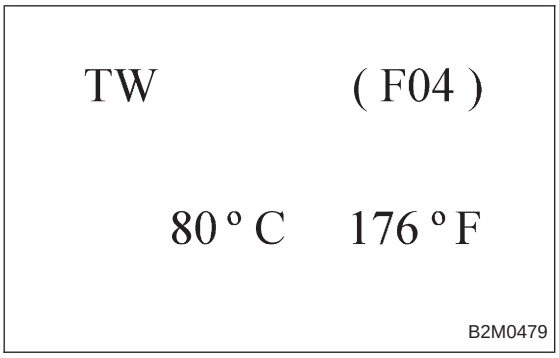

5) Read data on Subaru Select Monitor or OBD-II general scan tool.

- Subaru Select Monitor

Designate mode using function key.

Function mode: F04

- F04: Water temperature is indicated in "°C" and "°F".

CHECK ***: Is the value greater than 150°C or 300°F in function mode F04?***

YES : Go to step **10H2**.

NO : Repair poor contact.

NOTE:
In this case, repair the following:
- Poor contact in engine coolant temperature sensor
- Poor contact in ECM
- Poor contact in coupling connector (B21)
- OBD-II general scan tool

For detailed operation procedures, refer to the OBD-II General Scan Tool Instruction Manual.

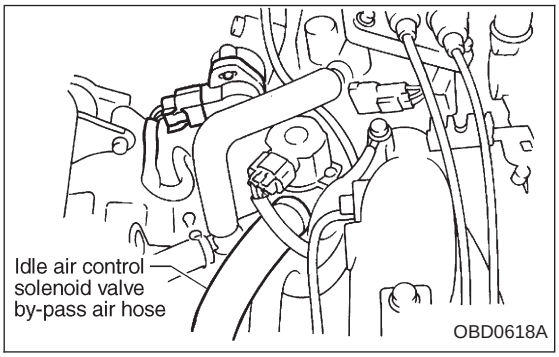

10H2	CHECK HARNESS BETWEEN ENGINE COOLANT TEMPERATURE SENSOR AND ECM CONNECTOR.

1) Turn ignition switch to OFF.
2) Remove idle air control solenoid valve by-pass air hose.
3) Disconnect connector from engine coolant temperature sensor.

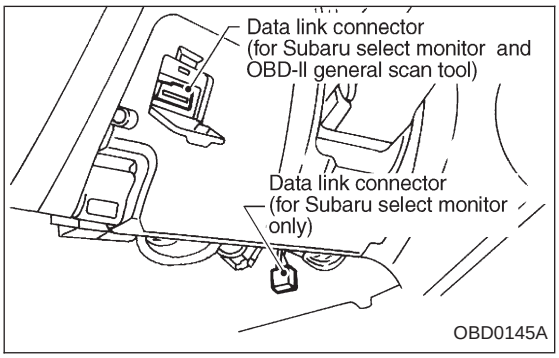

4) Connect Subaru Select Monitor or the OBD-II general scan tool to data link connector.
5) Turn ignition switch and Subaru Select Monitor or OBD-II general scan tool switch to ON.

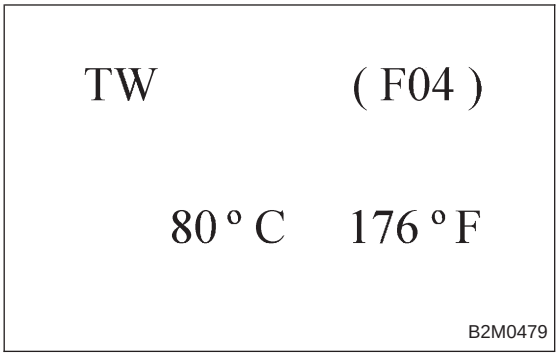

6) Read data on Subaru Select Monitor or the OBD-II general scan tool.

● Subaru Select Monitor
Designate mode using function key.

Function mode: F04

● F04: Water temperature is indicated in "°C" and "°F".

CHECK ***: Is the value less than −40°C or −40°F in function mode F04?***

YES : Replace engine coolant temperature sensor.

NO : Repair ground short circuit in harness between engine coolant temperature sensor and ECM connector.

● OBD-II general scan tool
For detailed operation procedures, refer to the OBD-II General Scan Tool Instruction Manual.

OBD (FB1)
P0117 <TW_HI>
B2M1068

I: DTC P0117 — ENGINE COOLANT TEMPERATURE SENSOR CIRCUIT HIGH INPUT —

DTC DETECTING CONDITION:

- Immediately at fault recognition

TROUBLE SYMPTOM:

- Hard to start
- Erroneous idling
- Poor driving performance

WIRING DIAGRAM:

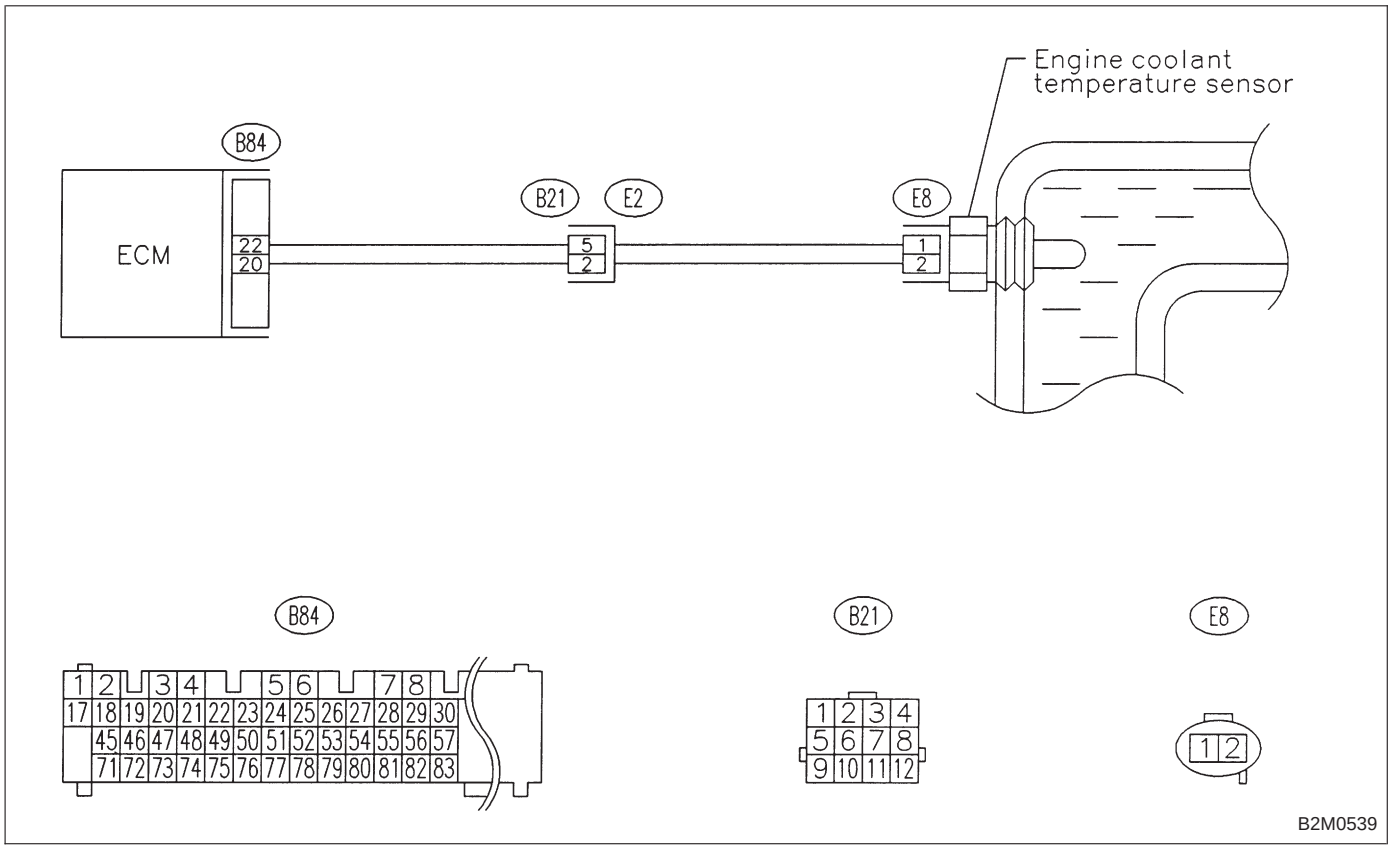

CAUTION:
After repair or replacement of faulty parts, conduct CLEAR MEMORY and INSPECTION MODES.
<Ref. to 2-7 [T3D0] and [T3E0].>

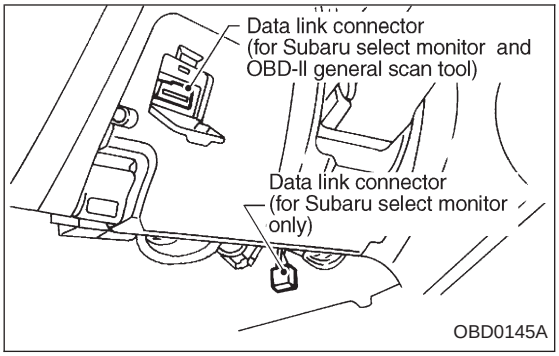

10I1	CONNECT SUBARU SELECT MONITOR OR THE OBD-II GENERAL SCAN TOOL, AND READ DATA.

1) Turn ignition switch to OFF.
2) Connect Subaru Select Monitor or the OBD-II general scan tool to data link connector.
3) Turn ignition switch to ON and Subaru Select Monitor or OBD-II general scan tool switch to ON.
4) Start engine.

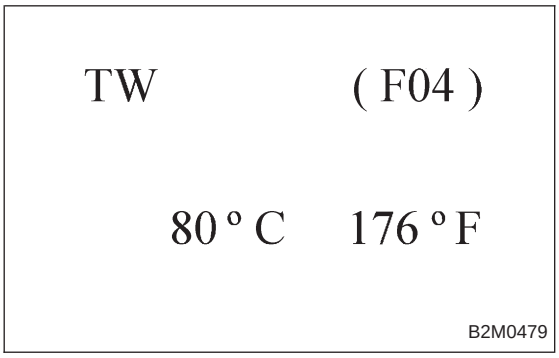

5) Read data on Subaru Select Monitor or OBD-II general scan tool.

- Subaru Select Monitor

Designate mode using function key.

Function mode: F04

- F04: Water temperature is indicated in "°C" and "°F".

CHECK ***: Is the value less than −40°C or −40°F in function mode F04?***

YES : Go to step **10I3**.

NO : Repair poor contact.

NOTE:
In this case, repair the following:

- Poor contact in engine coolant temperature sensor
- Poor contact in ECM
- Poor contact in coupling connector (B21)
- OBD-II general scan tool

For detailed operation procedures, refer to the OBD-II General Scan Tool Instruction Manual.

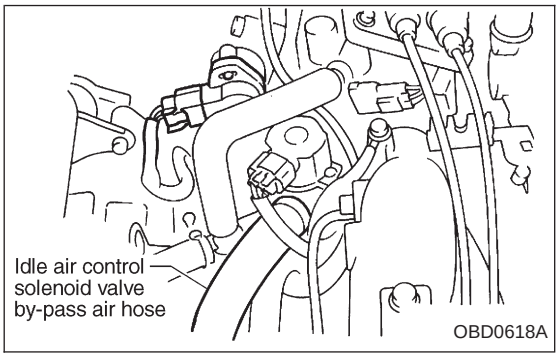

10I2	CHECK HARNESS BETWEEN ENGINE COOLANT TEMPERATURE SENSOR AND ECM CONNECTOR.

1) Turn ignition switch to OFF.
2) Remove idle air control solenoid valve by-pass air hose.
3) Disconnect connector from engine coolant temperature sensor.

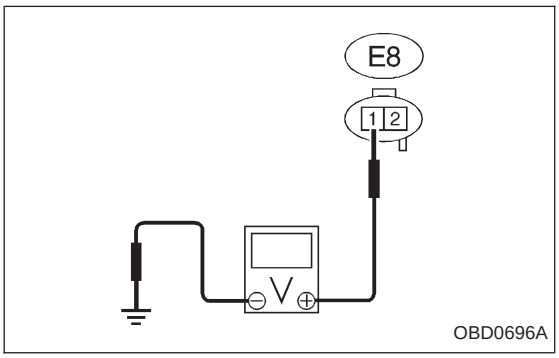

4) Measure voltage between engine coolant temperature sensor connector and engine ground.

CHECK ***: Connector & terminal (E8) No. 1 (+) — Engine ground (−): Is the voltage more than 10 V?***

YES : Repair battery short circuit in harness between ECM and engine coolant temperature sensor connector.

NO : Go to next step 5).

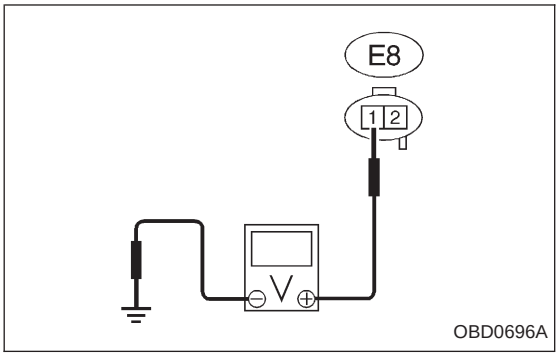

5) Turn ignition switch to ON.
6) Measure voltage between engine coolant temperature sensor connector and engine ground.

CHECK : ***Connector & terminal (E8) No. 1 (+) — Engine ground (−): Is the voltage more than 10 V?***

YES : Repair battery short circuit in harness between ECM and engine coolant temperature sensor connector.

NO : Go to step **10I3**.

10I3	**CHECK HARNESS BETWEEN ENGINE COOLANT TEMPERATURE SENSOR AND ECM CONNECTOR.**

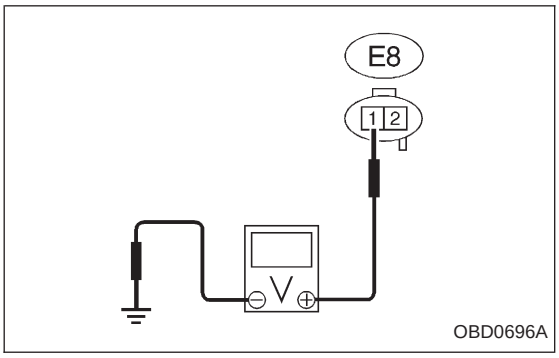

1) Measure voltage between engine coolant temperature sensor connector and engine ground.

CHECK : ***Connector & terminal (E8) No. 1 (+) — Engine ground (−): Is the voltage more than 4 V?***

YES : Go to next step 2).

NO : Repair harness and connector.

NOTE:
In this case, repair the following:
- Open circuit in harness between ECM and engine coolant temperature sensor connector
- Poor contact in engine coolant temperature sensor connector
- Poor contact in ECM connector
- Poor contact in coupling connector (B21)

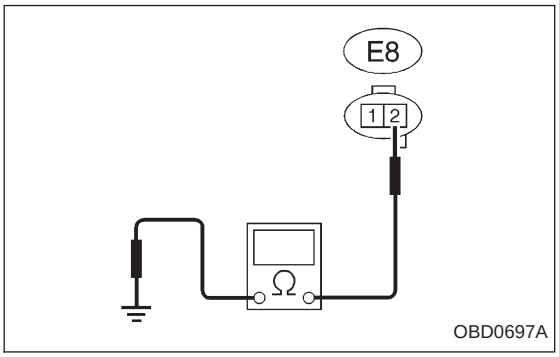

2) Turn ignition switch to OFF.
3) Measure resistance of harness between engine coolant temperature sensor connector and engine ground.

CHECK : ***Connector & terminal (E8) No. 2 — Engine ground: Is the resistance less than 5 Ω?***

YES : Replace engine coolant temperature sensor.

NO : Repair harness and connector.

NOTE:
In this case, repair the following:
- Open circuit in harness between ECM and engine coolant temperature sensor connector
- Poor contact in engine coolant temperature sensor connector
- Poor contact in ECM connector
- Poor contact in coupling connector (B21)

OBD (FB1)

P0121 <TH_RHI>

B2M1069

J: DTC P0121 — THROTTLE POSITION SENSOR CIRCUIT RANGE/PERFORMANCE PROBLEM (HIGH INPUT) —

DTC DETECTING CONDITION:

- Two consecutive driving cycles with fault

TROUBLE SYMPTOM:

- Erroneous idling
- Engine stalls.
- Poor driving performance

WIRING DIAGRAM:

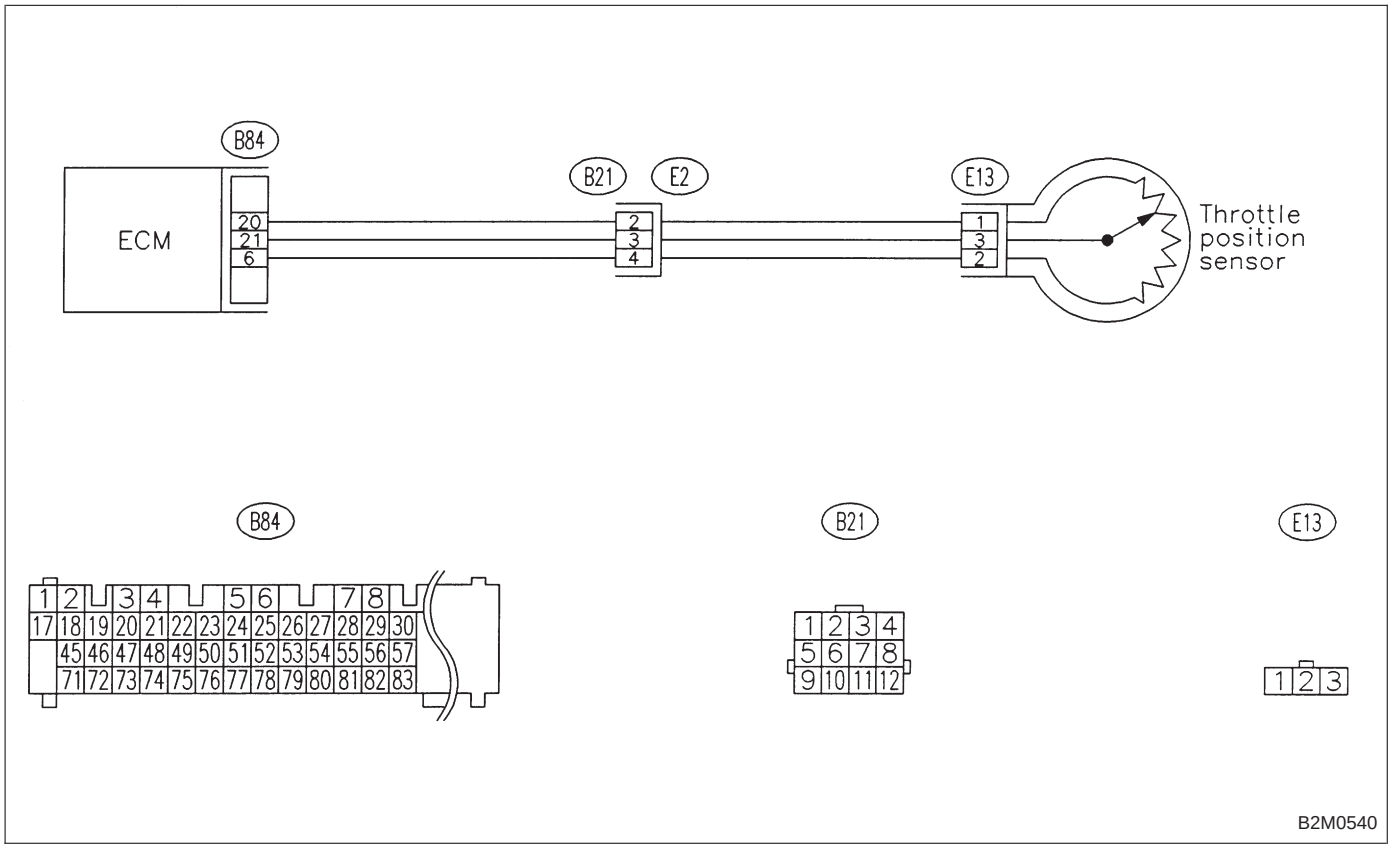

CAUTION:
After repair or replacement of faulty parts, conduct CLEAR MEMORY and INSPECTION MODES.
<Ref. to 2-7 [T3D0] and [T3E0].>

10J1	CHECK DTC P0122 OR P0123 ON DISPLAY.

CHECK : ***Does the Subaru select monitor or OBD-II general scan tool indicate DTC P0122 or P0123?***

YES : Inspect DTC P0122 or P0123 using “10. Diagnostics Chart with Trouble Code”. <Ref. to 2-7 [T10A0].>

NOTE:
In this case, it is not necessary to inspect DTC P0121.

NO : Replace throttle position sensor.

OBD (FB1)

P0122 <THV_LOW>

B2M1070

K: DTC P0122 — THROTTLE POSITION SENSOR CIRCUIT LOW INPUT —

DTC DETECTING CONDITION:

- Immediately at fault recognition

TROUBLE SYMPTOM:

- Erroneous idling
- Engine stalls.
- Poor driving performance

WIRING DIAGRAM:

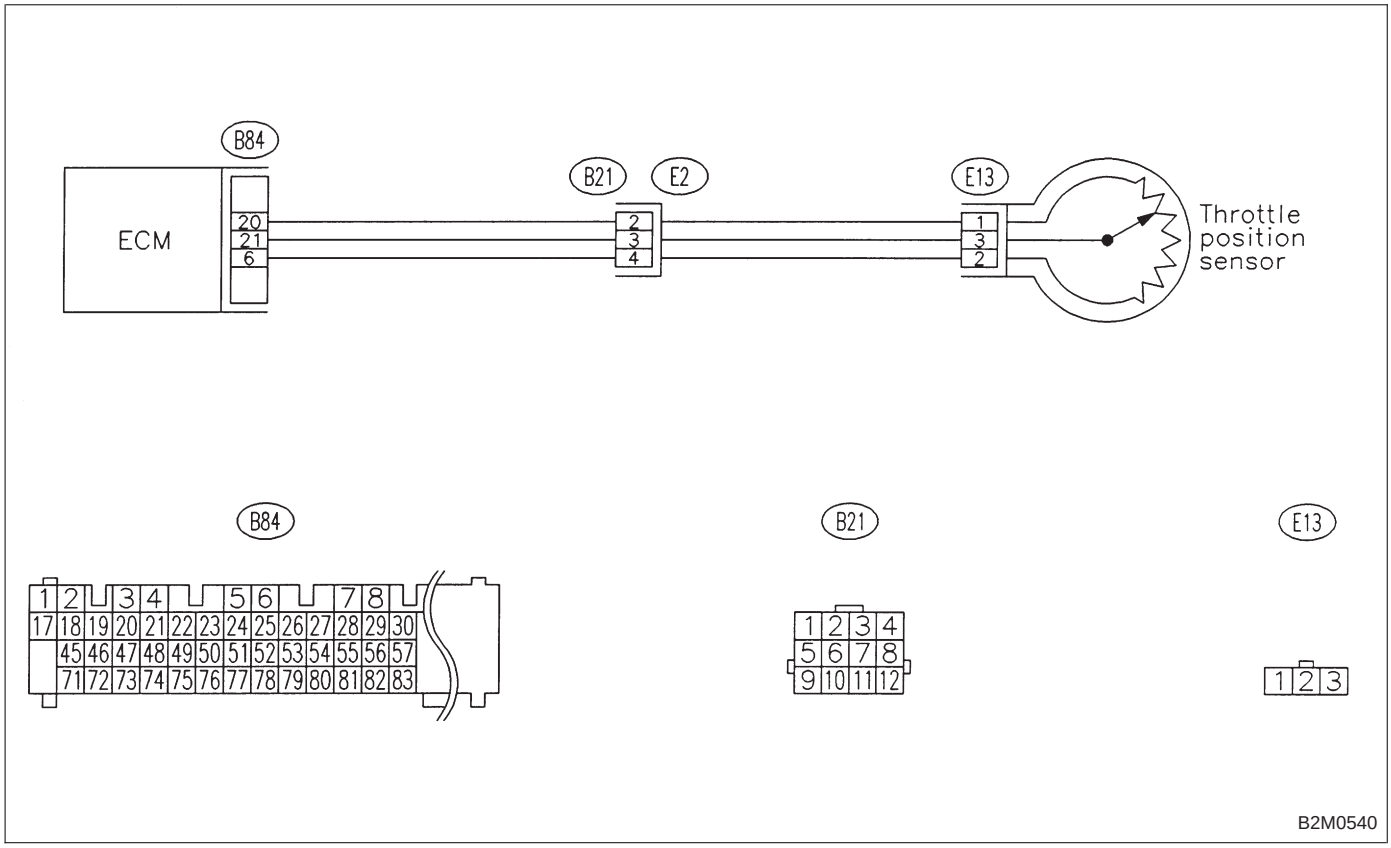

CAUTION:
After repair or replacement of faulty parts, conduct CLEAR MEMORY and INSPECTION MODES.
<Ref. to 2-7 [T3D0] and [T3E0].>

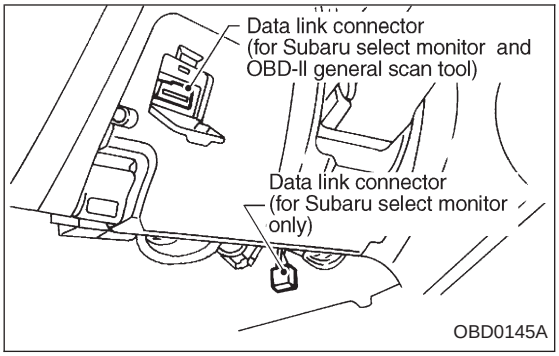

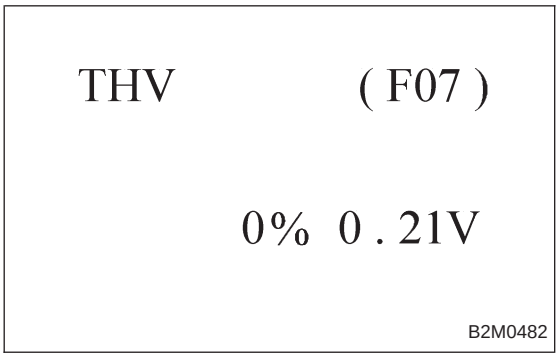

10K1	CONNECT SUBARU SELECT MONITOR OR THE OBD-II GENERAL SCAN TOOL, AND READ DATA.

1) Turn ignition switch to OFF.
2) Connect Subaru Select Monitor or the OBD-II general scan tool to data link connector.
3) Turn ignition switch to ON and Subaru Select Monitor or OBD-II general scan tool switch to ON.
4) Start engine.

5) Read data on Subaru Select Monitor or OBD-II general scan tool.

- Subaru Select Monitor

Designate mode using function key.

Function mode: F07

- F07: Throttle position sensor output signal is indicated.

CHECK : ***Is the value less than 0.1 V in function mode F07?***

YES : Go to step **10G2**.

NO : Even if MIL lights up, the circuit has returned to a normal condition at this time. A temporary poor contact of the connector may be the cause.

NOTE:
In this case, repair the following:

- Poor contact in throttle position sensor connector
- Poor contact in ECM connector
- Poor contact in coupling connector (B21)

- OBD-II general scan tool

For detailed operation procedures, refer to the OBD-II General Scan Tool Instruction Manual.

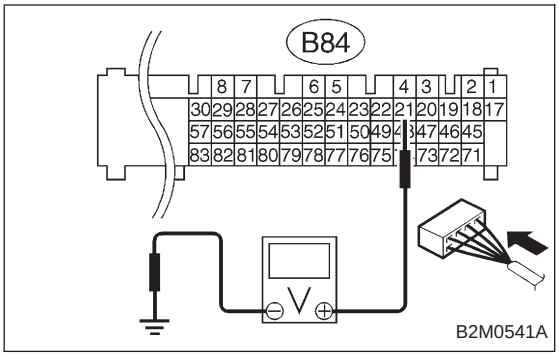

10K2	CHECK INPUT SIGNAL FOR ECM. (USING VOLTAGE METER AND SUBARU SELECT MONITOR.)

1) Measure voltage between ECM connector and chassis ground while throttle valve is fully closed.

CHECK : ***Connector & terminal (B84) No. 21 (+) — Chassis ground (−): Is the voltage more than 4.5 V?***

YES : Go to next step 2).

NO : Go to next CHECK .

CHECK : ***Does the voltage change more than 4.5 V by shaking harness and connector of ECM while monitoring the value with voltage meter?***

YES : Repair poor contact in ECM connector.

NO : Contact with SOA service.

NOTE:
Inspection by DTM is required, because probable cause is deterioration of multiple parts.

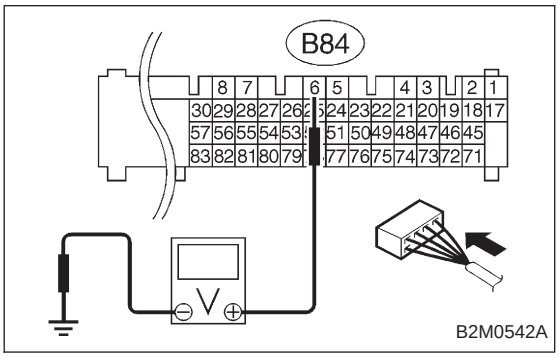

2) Measure voltage between ECM connector and chassis ground.

CHECK : ***Connector & terminal (B84) No. 6 (+) — Chassis ground (−): Is the voltage less than 0.1 V?***

YES : Go to step **10K3**.

NO : Go to next CHECK .

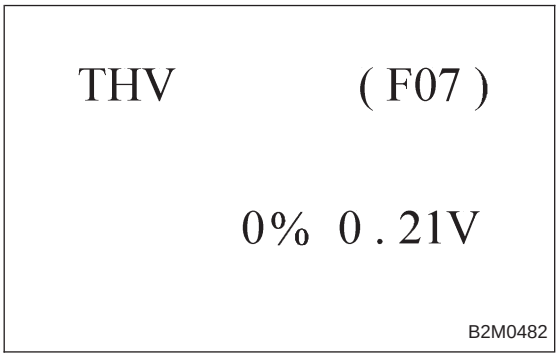

CHECK : ***Does the voltage change more than 0.1 V by shaking harness and connector of ECM while monitoring the value with Subaru select monitor?***

YES : Repair poor contact in ECM connector.

NO : Go to step **10K3**.

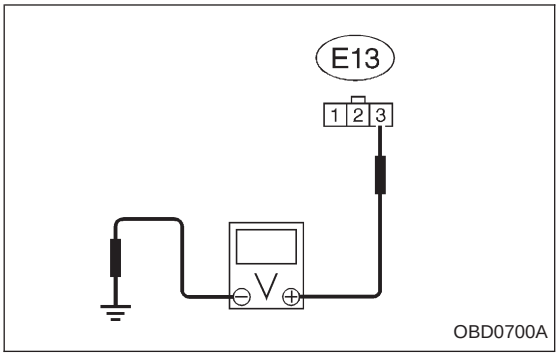

10K3	CHECK HARNESS BETWEEN ECM AND THROTTLE POSITION SENSOR CONNECTOR.

1) Turn ignition switch to OFF.
2) Disconnect connectors from throttle position sensor.
3) Turn ignition switch to ON.
4) Measure voltage between throttle position sensor connector and engine ground.

CHECK : ***Connector & terminal (E13) No. 3 (+) — Engine ground (−): Is the voltage more than 4.5 V?***

YES : Go to next step 5).

NO : Repair harness and connector.

NOTE:
In this case, repair the following:
- Open circuit in harness between throttle position sensor and ECM connector
- Poor contact in throttle position sensor connector
- Poor contact in ECM connector
- Poor contact in coupling connector (B21)

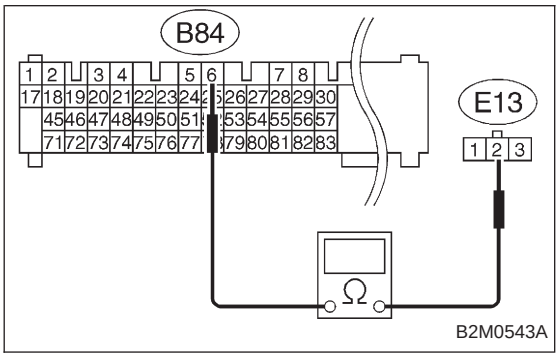

5) Turn ignition switch to OFF.
6) Measure resistance of harness between ECM connector and throttle position sensor connector.

CHECK : ***Connector & terminal (B84) No. 6 — (E13) No. 2: Is the resistance less than 1 Ω?***

YES : Go to next step 7).

NO : Repair harness and connector.

NOTE:
In this case, repair the following:
- Open circuit in harness between throttle position sensor and ECM connector
- Poor contact in ECM connector
- Poor contact in throttle position sensor connector
- Poor contact in coupling connector (B21)

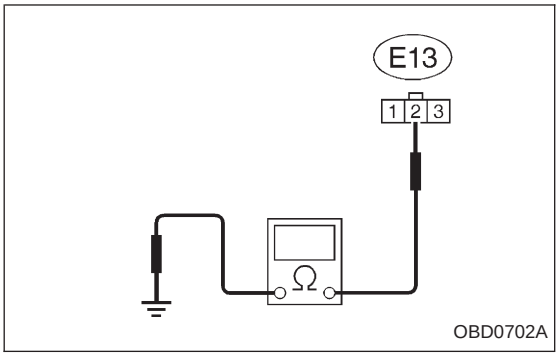

7) Measure resistance of harness between throttle position sensor connector and engine ground.

CHECK : ***Connector & terminal (E13) No. 2 — Engine ground: Is the resistance less than 10 Ω?***

YES : Repair ground short circuit in harness between throttle position sensor and ECM connector.

NO : Go to next CHECK .

CHECK : ***Is there poor contact in throttle position sensor connector?***

YES : Repair poor contact in throttle position sensor connector.

NO : Replace throttle position sensor.

OBD (FB1)
P0123 <THV_HI>
B2M1071

L: DTC P0123 — THROTTLE POSITION SENSOR CIRCUIT HIGH INPUT —

DTC DETECTING CONDITION:

- Immediately at fault recognition

TROUBLE SYMPTOM:

- Erroneous idling
- Engine stalls.
- Poor driving performance

WIRING DIAGRAM:

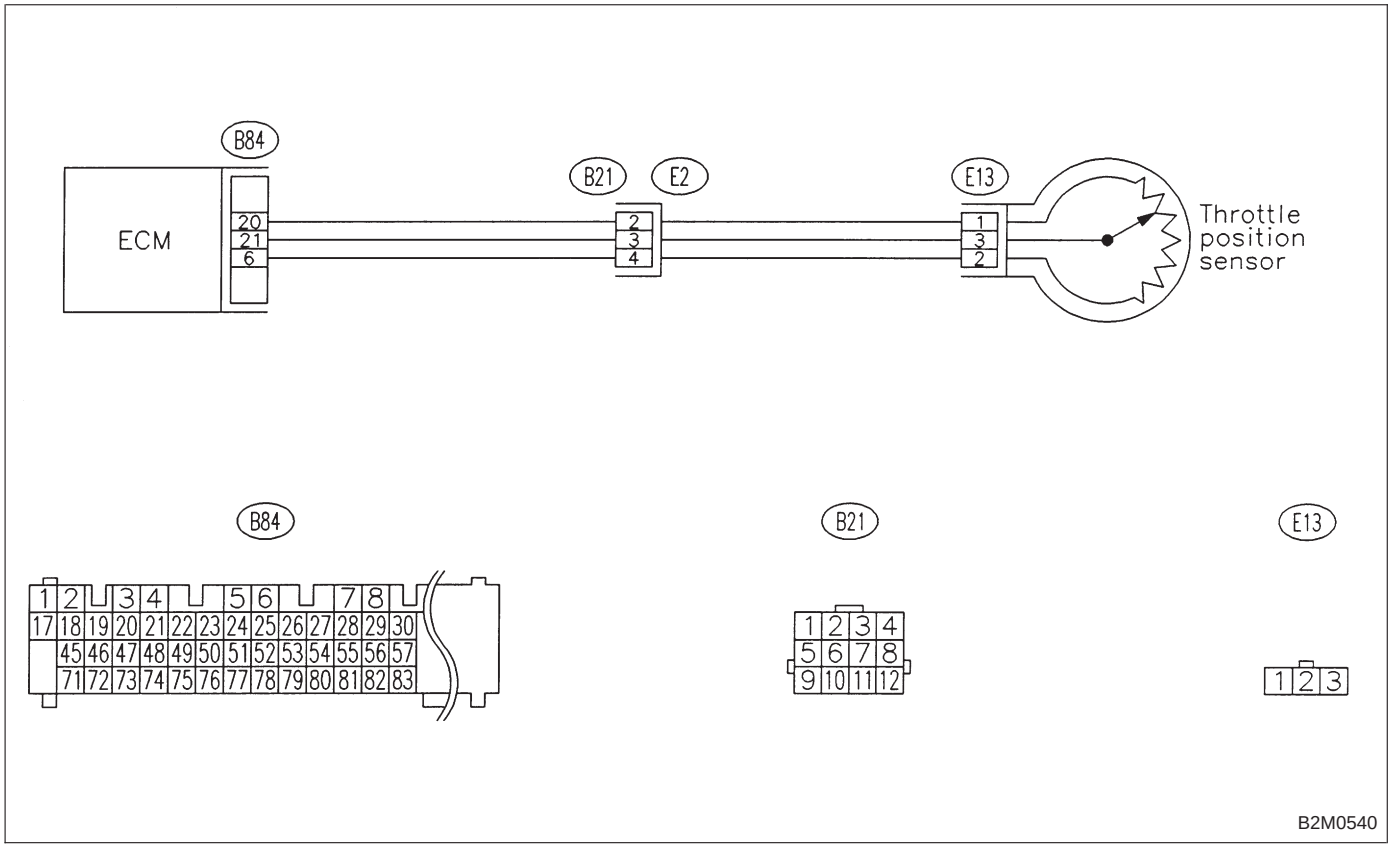

CAUTION:
After repair or replacement of faulty parts, conduct CLEAR MEMORY and INSPECTION MODES.
<Ref. to 2-7 [T3D0] and [T3E0].>

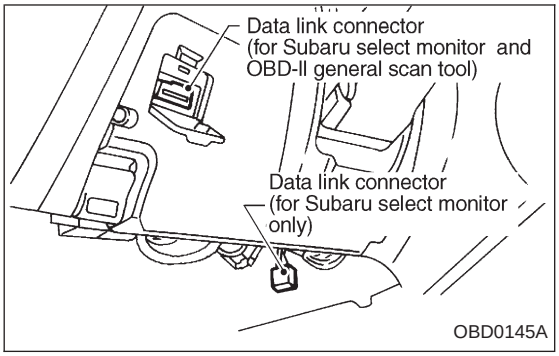

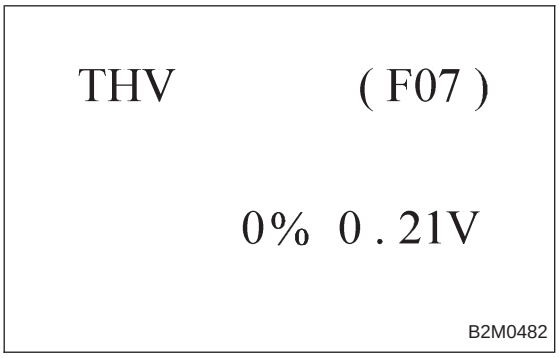

10L1	CONNECT SUBARU SELECT MONITOR OR THE OBD-II GENERAL SCAN TOOL, AND READ DATA.

1) Turn ignition switch to OFF.
2) Connect Subaru Select Monitor or the OBD-II general scan tool to data link connector.
3) Turn ignition switch to ON and Subaru Select Monitor or OBD-II general scan tool switch to ON.
4) Start engine.

5) Read data on Subaru Select Monitor or OBD-II general scan tool.

- Subaru Select Monitor

Designate mode using function key.

Function mode: F07

- F07: Throttle position sensor output signal is indicated.

CHECK ***: Is the value more than 4.9 V in function mode F07?***

YES : Go to step **10L2**.

NO : Even if MIL lights up, the circuit has returned to a normal condition at this time. A temporary poor contact of the connector may be the cause.

NOTE:
In this case, repair the following:

- Poor contact in throttle position sensor connector
- Poor contact in ECM connector
- Poor contact in coupling connector (B21)

- OBD-II general scan tool

For detailed operation procedures, refer to the OBD-II General Scan Tool Instruction Manual.

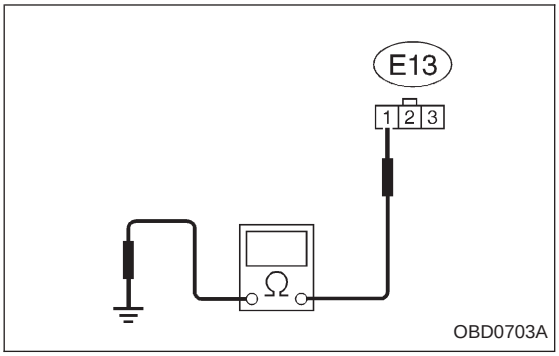

10L2	CHECK HARNESS BETWEEN THROTTLE POSITION SENSOR AND BODY CONNECTOR.

1) Turn ignition switch to OFF.
2) Disconnect connector from throttle position sensor.
3) Measure resistance of harness between throttle position sensor connector and engine ground.

CHECK : ***Connector & terminal***
(E13) No. 1 — Engine ground:
Is the resistance less than 5 Ω?

YES : Go to next step 4).

NO : Repair open circuit in harness between throttle position sensor and ECM connector.

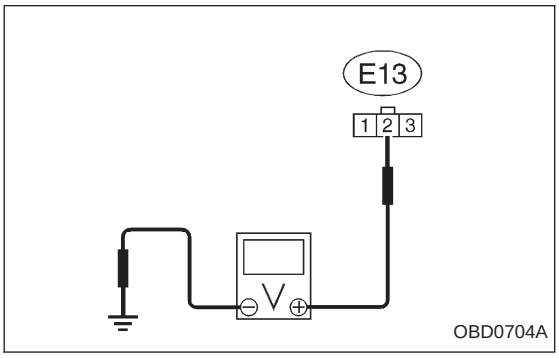

4) Turn ignition switch to ON.
5) Measure voltage between throttle position sensor connector and engine ground.

CHECK : ***Connector & terminal***
(E13) No. 2 (+) — Engine ground (−):
Is the voltage more than 4.9 V?

YES : Repair battery short circuit in harness between throttle position sensor and ECM connector. After repair, replace ECM.

NO : Replace throttle position sensor.

OBD	(FB1)
P0125	<TW_CL>

OBD0191

M: DTC P0125 — INSUFFICIENT COOLANT TEMPERATURE FOR CLOSED LOOP FUEL CONTROL —

DTC DETECTING CONDITION:

- Two consecutive driving cycles with fault

TROUBLE SYMPTOM:

- Engine would not return to idling.

WIRING DIAGRAM:

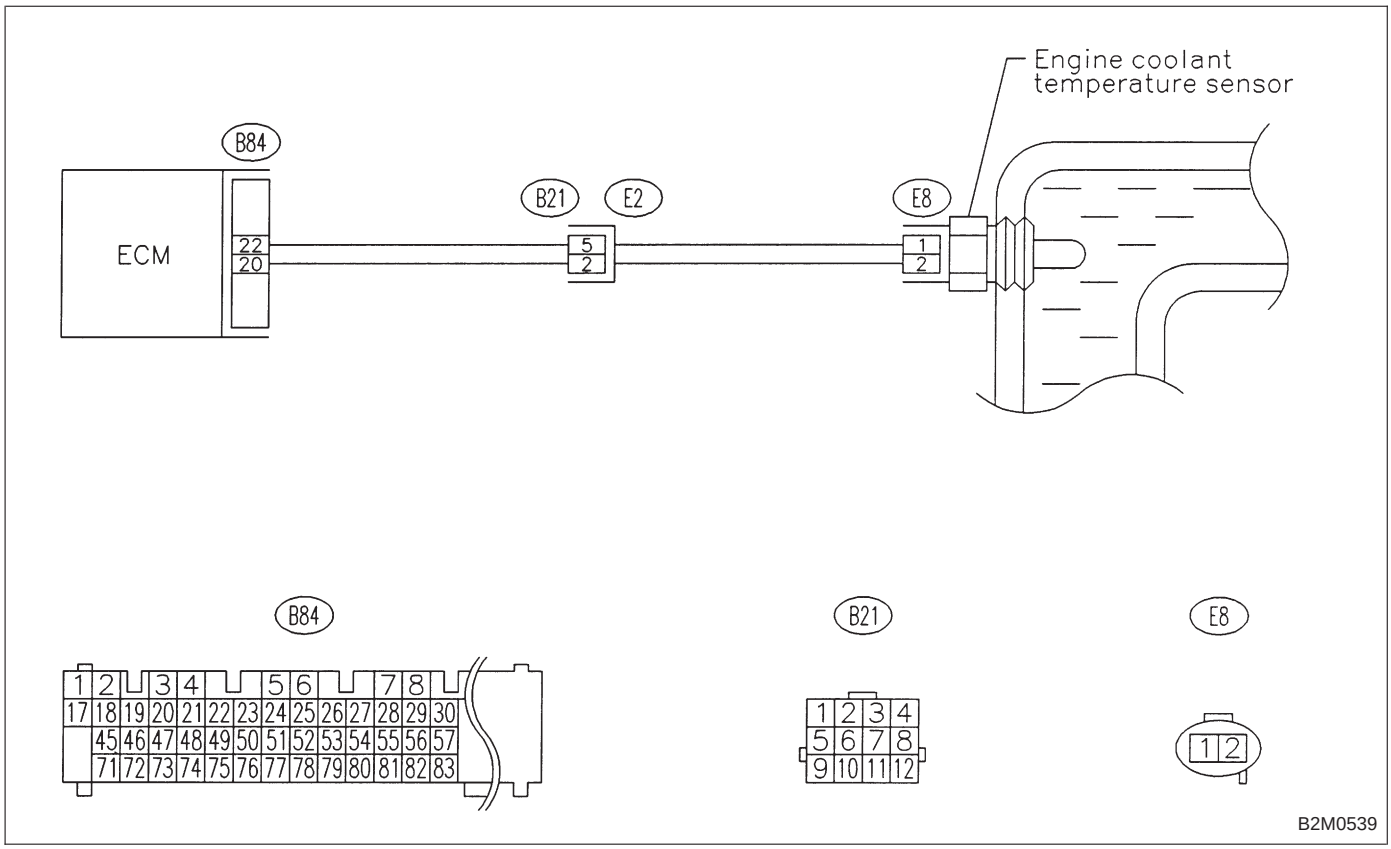

CAUTION:
After repair or replacement of faulty parts, conduct CLEAR MEMORY and INSPECTION MODES.
<Ref. to 2-7 [T3D0] and [T3E0].>

10M1	CHECK DTC P0116 OR P0117 ON DISPLAY.

CHECK : ***Does the Subaru select monitor or OBD-II general scan tool indicate DTC P0116 or P0117?***

YES : Inspect DTC P0116 or P0117 using “10. Diagnostics Chart with Trouble Code”. <Ref. to 2-7 [T10A0].>

NOTE:
In this case, it is not necessary to inspect DTC P0125.

NO : Replace engine coolant temperature sensor.

OBD	(FB1)
P0130	<FO2_V>

OBD0199

N: DTC P0130 — FRONT OXYGEN SENSOR CIRCUIT MALFUNCTION —

DTC DETECTING CONDITION:

- Two consecutive driving cycles with fault

WIRING DIAGRAM:

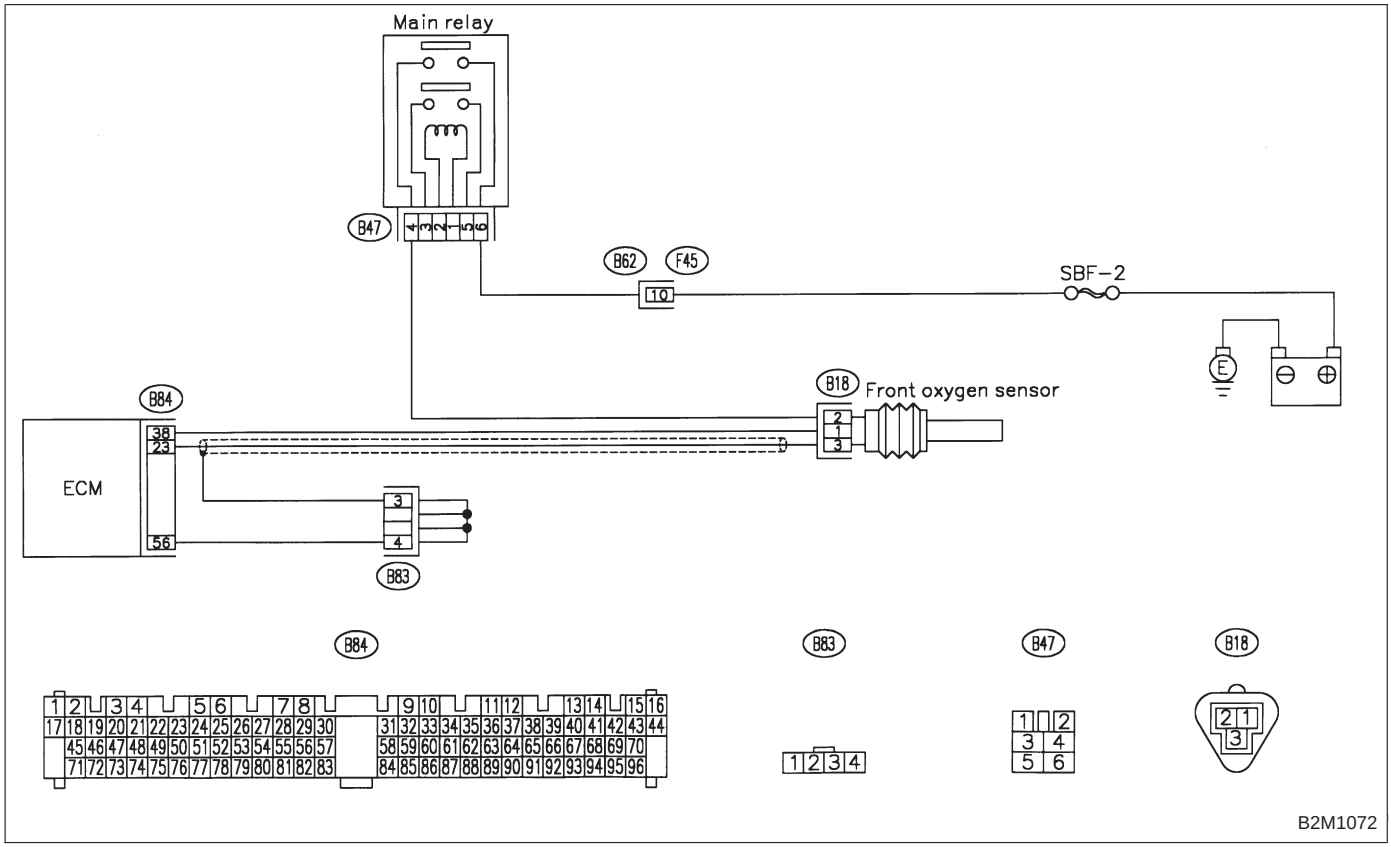

CAUTION:
After repair or replacement of faulty parts, conduct CLEAR MEMORY and INSPECTION MODES.
<Ref. to 2-7 [T3D0] and [T3E0].>

10N1	CHECK FOR OTHER CAUSES AFFECTING EXHAUST GAS.

CHECK : ***Is CO % more than 2 % after engine warm-up?***

YES : Check fuel system.

NOTE:
- Check for use of improper fuel.
- Check if engine oil or coolant level is extremely low.

NO : Go to step **10N2**.

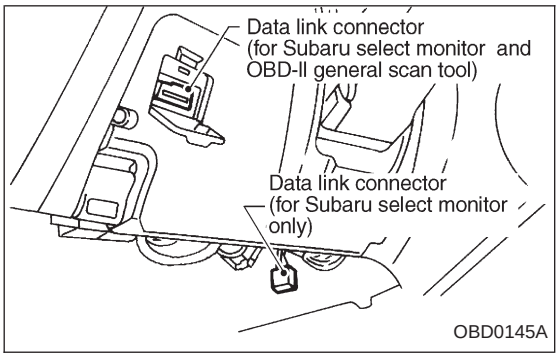

10N2	CHECK FRONT OXYGEN SENSOR DATA.

1) Turn ignition switch to OFF.
2) Connect the Subaru Select Monitor or the OBD-II general scan tool to data link connector.
3) Start engine and Turn the Subaru Select Monitor and the OBD-II general scan tool switch to ON.
4) Warm-up the engine until coolant temperature is above 70°C (160°F) and keep the engine speed at 2,000 rpm to 3,000 rpm for one minute.

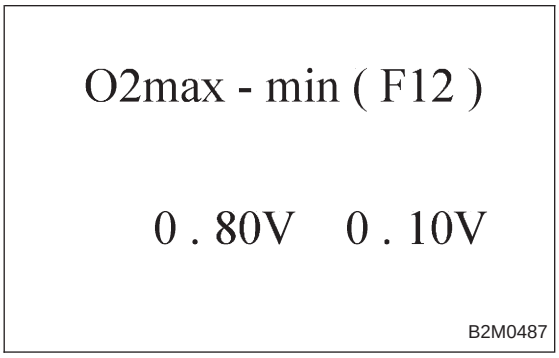

5) Read data on Subaru Select Monitor or the OBD-II general scan tool.

- Subaru Select Monitor

Designate mode using function key.

Function mode: F12

- F12: Front oxygen sensor max. and min. output signals are indicated at the same time.

CHECK : ***Is the difference of voltage less than 0.1 V between the value of max. output and min. output with function mode F12?***

YES : Go to step **10N3**.

NO : Replace front oxygen sensor.

- OBD-II general scan tool

For detailed operation procedures, refer to the OBD-II General Scan Tool Instruction Manual.

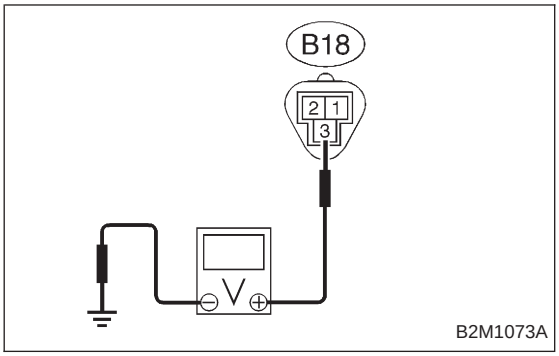

10N3	CHECK HARNESS BETWEEN FRONT OXYGEN SENSOR AND ECM CONNECTOR.

1) Turn ignition switch to OFF.
2) Disconnect connector from front oxygen sensor.
3) Turn ignition switch to ON.
4) Measure voltage between front oxygen sensor harness connector and engine ground.

CHECK : ***Connector & terminal (B18) No. 3 (+) — Engine ground (−): Is the voltage more than 0.2 V?***

YES : Go to next CHECK .

NO : Repair harness and connector.

NOTE:
In this case, repair the following:
- Open circuit in harness between ECM and front oxygen sensor connector
- Poor contact in the ECM connector

CHECK : ***Is there poor contact in front oxygen sensor connector?***

YES : Repair poor contact in front oxygen sensor connector.

NO : Replace front oxygen sensor.

OBD	(FB1)
P0133	<FO2_R>

OBD0209

O: DTC P0133 — FRONT OXYGEN SENSOR CIRCUIT SLOW RESPONSE —

DTC DETECTING CONDITION:

- Two consecutive driving cycles with fault

WIRING DIAGRAM:

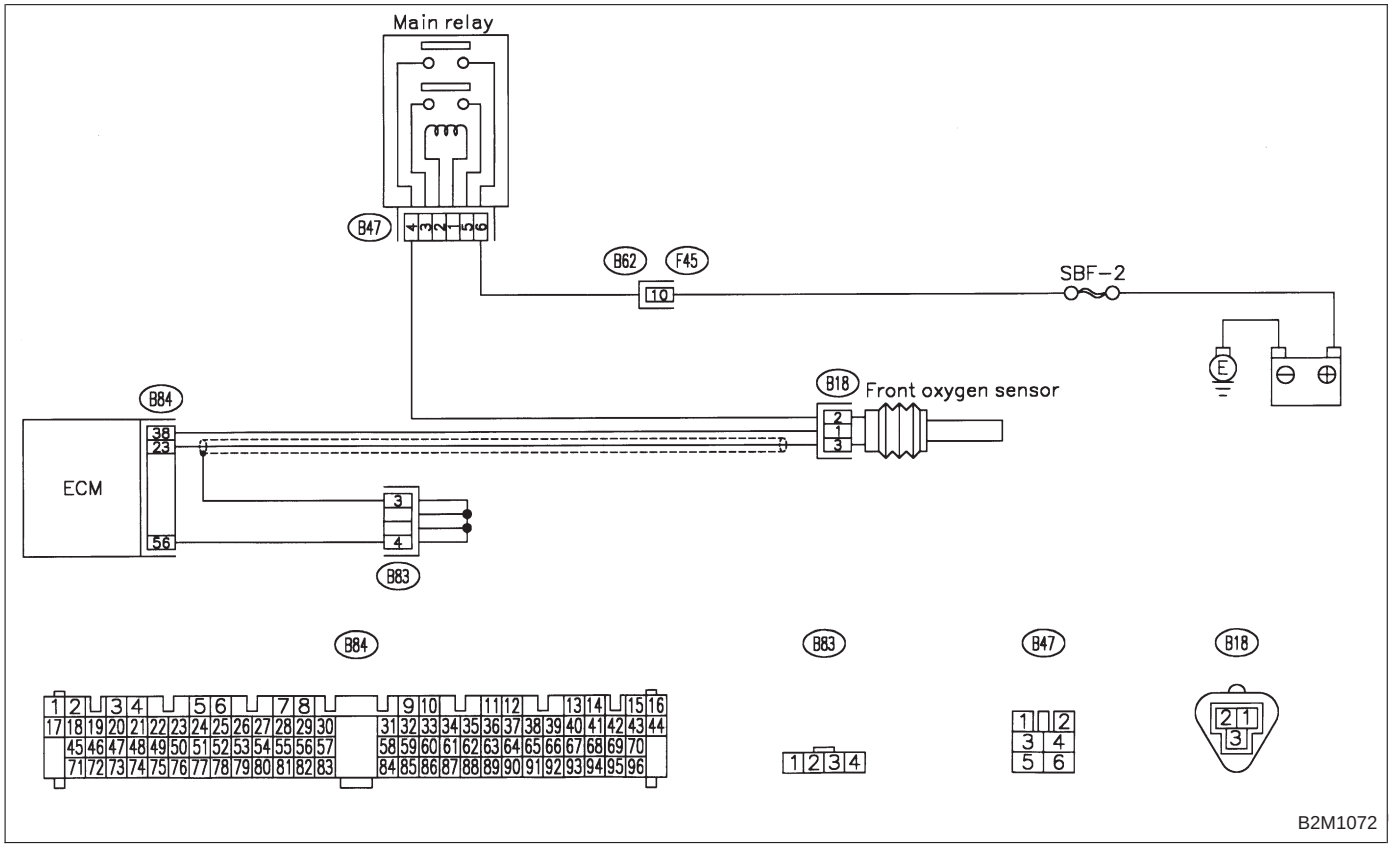

CAUTION:
After repair or replacement of faulty parts, conduct CLEAR MEMORY and INSPECTION MODES.
<Ref. to 2-7 [T3D0] and [T3E0].>

10O1	CHECK DTC P0130 ON DISPLAY.

CHECK : ***Does the Subaru select monitor or OBD-II general scan tool indicate DTC P0130?***

YES : Inspect DTC P0130 using “10. Diagnostics Chart with Trouble Code”. <Ref. to 2-7 [T10A0].>

NOTE:
In this case, it is not necessary to inspect DTC P0133.

NO : Go to step **10O2**.

10O2	CHECK EXHAUST SYSTEM.

CHECK : ***Is there a fault in exhaust system?***

NOTE:
Check the following items.
- Loose installation of front portion of exhaust pipe onto cylinder heads
- Loose connection between front exhaust pipe and front catalytic converter
- Damage of exhaust pipe resulting in a hole

YES : Repair exhaust system.

NO : Replace front oxygen sensor.

OBD	(FB1)
P0135	<FO2H>

OBD0212

P: DTC P0135 — FRONT OXYGEN SENSOR HEATER CIRCUIT MALFUNCTION —

DTC DETECTING CONDITION:

- Two consecutive driving cycles with fault

WIRING DIAGRAM:

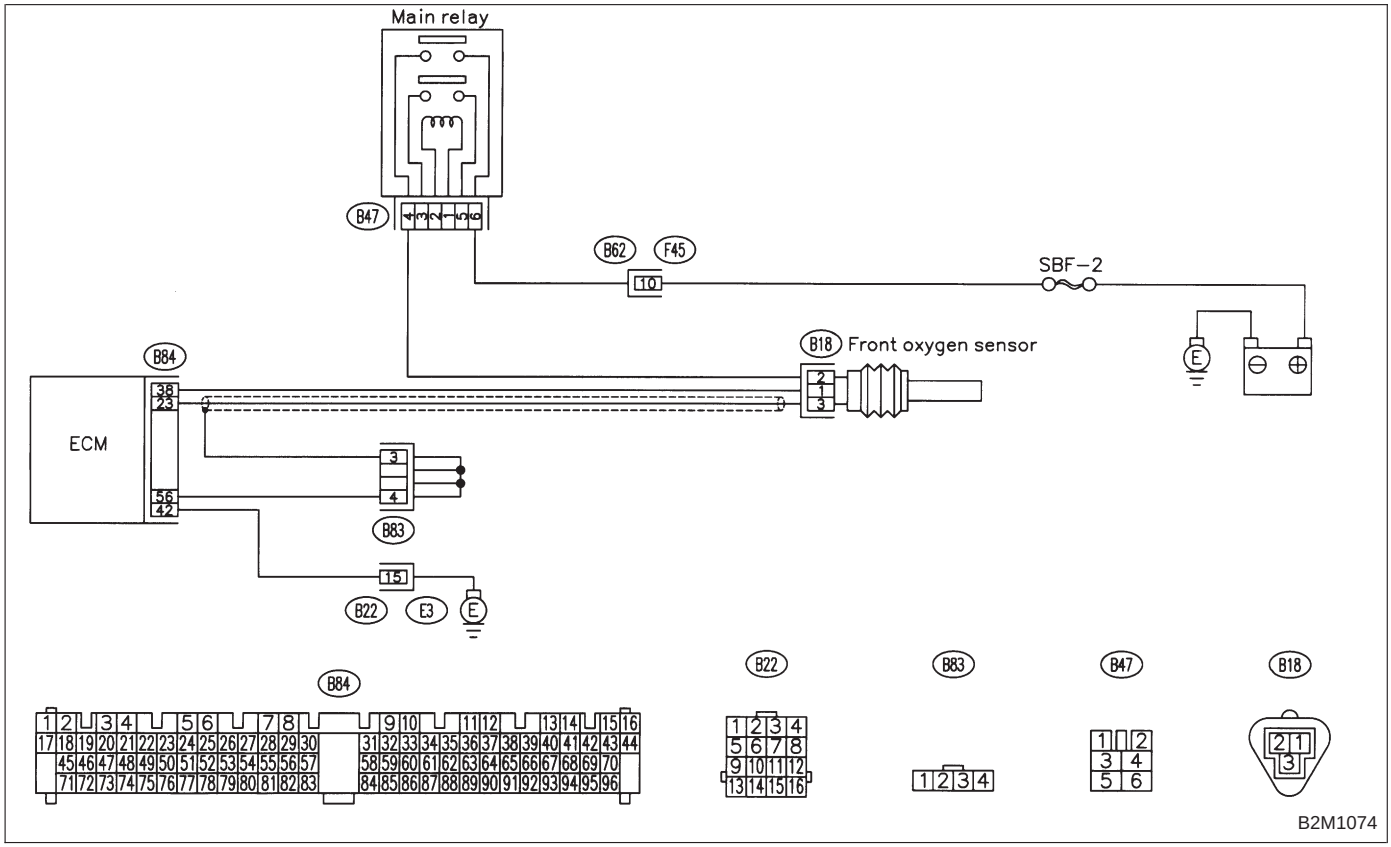

CAUTION:
After repair or replacement of faulty parts, conduct CLEAR MEMORY and INSPECTION MODES.
<Ref. to 2-7 [T3D0] and [T3E0].>

10P1	CHECK DTC P0141 ON DISPLAY.

CHECK : ***Does the Subaru select monitor or OBD-II general scan tool indicate DTC P0135 and P0141 at the same time?***

YES : Go to next step 1).

NO : Go to step **10P2**.

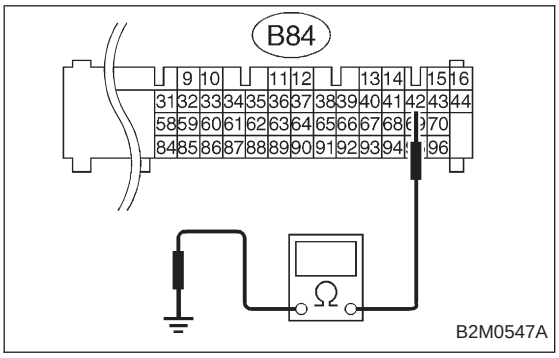

1) Turn ignition switch to OFF.
2) Disconnect connector from ECM.
3) Measure resistance of harness between ECM connector and chassis ground.

CHECK : ***Connector & terminal (B84) No. 42 — Chassis ground: Is the resistance less than 5 Ω?***

YES : Repair poor contact in ECM connector.

NO : Repair harness and connector.

NOTE:
In this case, repair the following:
- Open circuit in harness between ECM and coupling connector (B22)
- Open circuit in harness between coupling connector (B22) and engine grounding terminal
- Poor contact in front oxygen sensor connector
- Poor contact in coupling connector (B22)

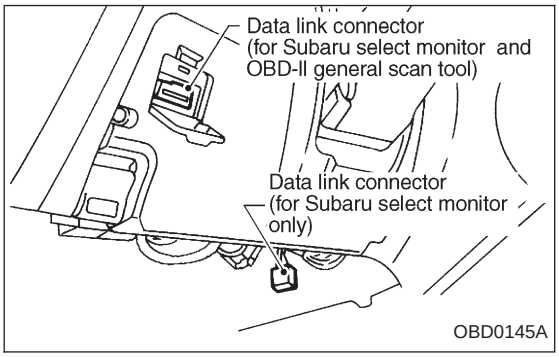

10P2	CONNECT SUBARU SELECT MONITOR OR THE OBD-II GENERAL SCAN TOOL, AND READ DATA.

1) Turn ignition switch to OFF.
2) Connect Subaru Select Monitor or the OBD-II general scan tool to data link connector.
3) Turn ignition switch to ON and Subaru Select Monitor or OBD-II general scan tool switch to ON.
4) Start engine.

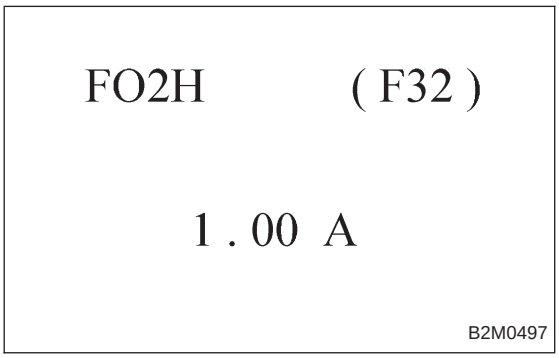

5) Read data on Subaru Select Monitor or OBD-II general scan tool.
- Subaru Select Monitor

Designate mode using function key.

Function mode: F32

- F32: Front oxygen sensor heater current is indicated.

CHECK : ***Is the value more than 0.2 A in function mode F32?***

YES : Repair connector.

NOTE:
In this case, repair the following:
- Poor contact in front oxygen sensor connector
- Poor contact in ECM connector

NO : Go to step **10P3**.

- OBD-II scan tool

For detailed operation procedures, refer to the OBD-II General Scan Tool Instruction Manual.

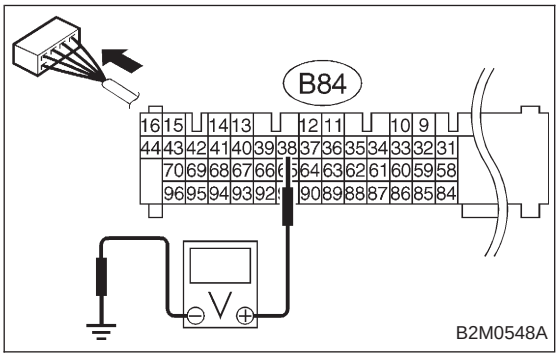

10P3	CHECK OUTPUT SIGNAL FROM ECM. (USING VOLTAGE METER.)

1) Start and idle the engine.
2) Measure voltage between ECM connector and chassis ground.

CHECK : ***Connector & terminal (B84) No. 38 (+) — Chassis ground (−): Is the voltage less than 1.0 V?***

YES : Go to step **10P4**.

NO : Go to next CHECK .

CHECK : ***Does the voltage change less than 1.0 V by shaking harness and connector of ECM while monitoring the value with voltage meter?***

YES : Repair poor contact in ECM connector.

NO : Go to next step 3).

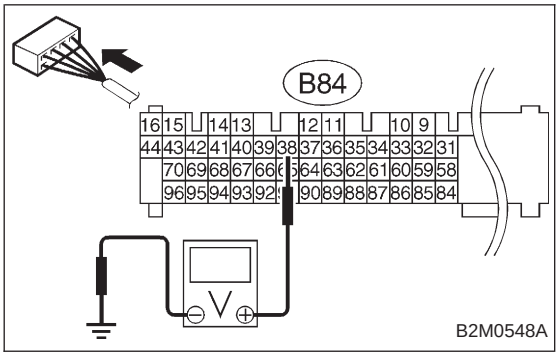

3) Disconnect connector from front oxygen sensor.
4) Measure voltage between ECM connector and chassis ground.

CHECK : ***Connector & terminal (B84) No. 38 (+) — Chassis ground (−): Is the voltage less than 1.0 V?***

YES : Replace ECM.

NO : Repair battery short circuit in harness between ECM and front oxygen sensor connector. After repair, replace ECM.

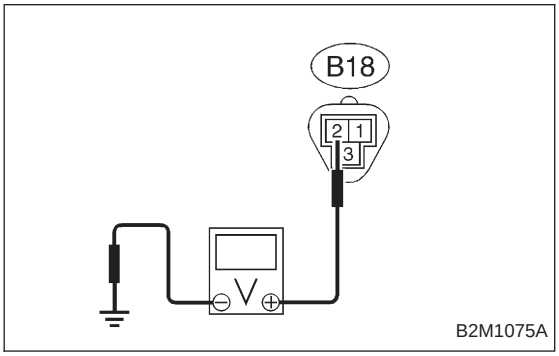

10P4	CHECK POWER SUPPLY TO FRONT OXYGEN SENSOR.

1) Turn ignition switch to OFF.
2) Disconnect connector from front oxygen sensor.
3) Turn ignition switch to ON.
4) Measure voltage between front oxygen sensor connector and engine ground.

CHECK : ***Connector & terminal (B18) No. 2 (+) — Engine ground (−): Is the voltage more than 10 V?***

YES : Go to step **10P5**.

NO : Repair power supply line.

NOTE:
In this case, repair the following:
- Open circuit in harness between main relay and front oxygen sensor connector
- Poor contact in front oxygen sensor connector
- Poor contact in main relay connector

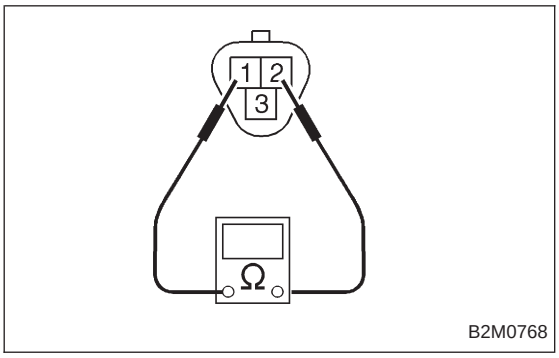

10P5	CHECK FRONT OXYGEN SENSOR.

1) Turn ignition switch to OFF.
2) Measure resistance between front oxygen sensor connector terminals.

CHECK : ***Terminals***
No. 1 — No. 2:
Is the resistance less than 30 Ω?

YES : Repair harness and connector.

NOTE:
In this case, repair the following:
- Open circuit in harness between front oxygen sensor and ECM connector
- Poor contact in front oxygen sensor connector
- Poor contact in ECM connector

NO : Replace front oxygen sensor.

OBD	(FB1)
P0136	<RO2_V>

OBD0220

Q: DTC P0136 — REAR OXYGEN SENSOR CIRCUIT MALFUNCTION —

DTC DETECTING CONDITION:

- Two consecutive driving cycles with fault

WIRING DIAGRAM:

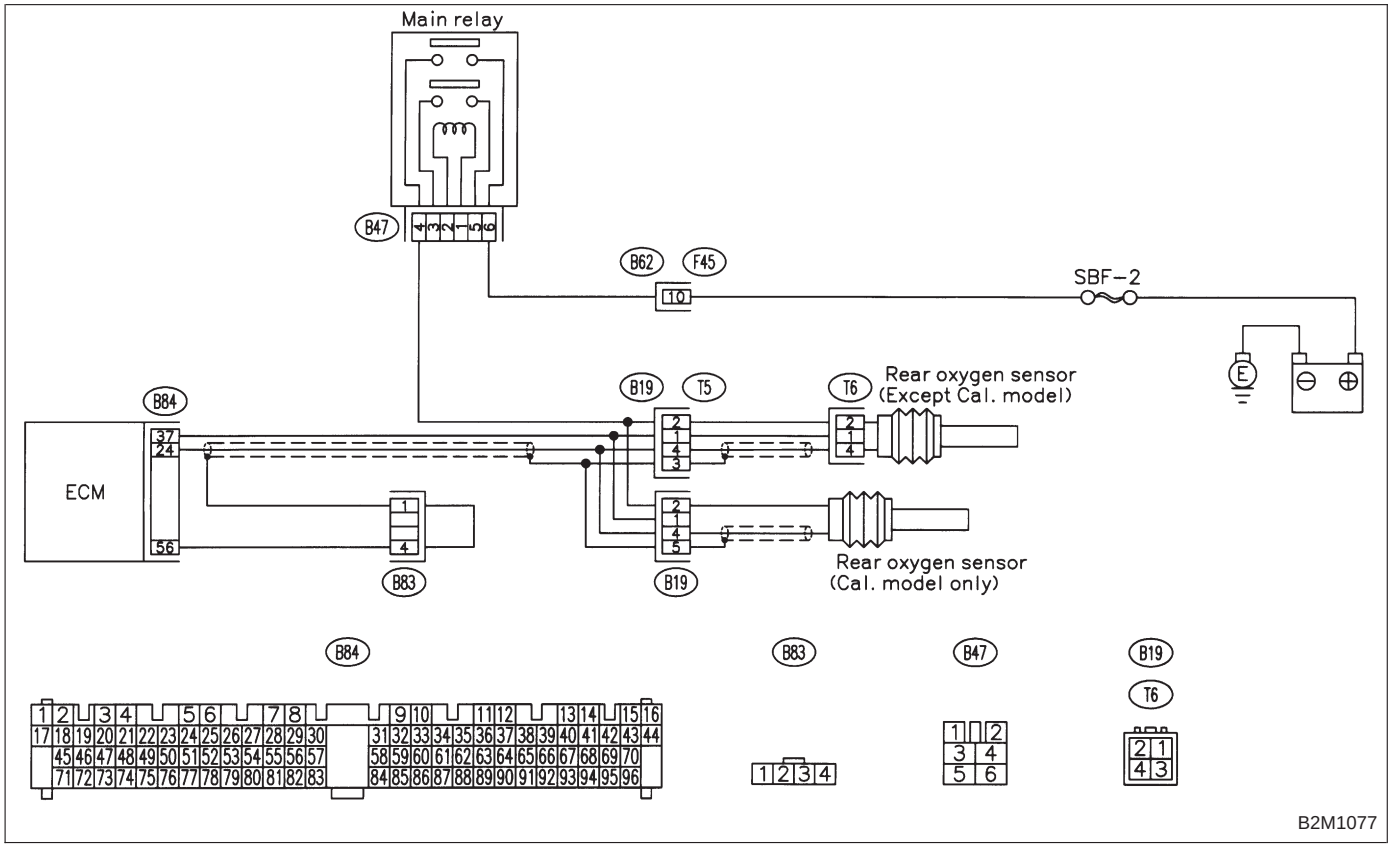

CAUTION:
After repair or replacement of faulty parts, conduct CLEAR MEMORY and INSPECTION MODES.
<Ref. to 2-7 [T3D0] and [T3E0].>

10Q1	CHECK DTC P0130 ON DISPLAY.

CHECK : ***Does the Subaru select monitor or OBD-II general scan tool indicate DTC P0130?***

YES : Go to step **10Q2**.

NO : Go to step **10Q3**.

10Q2	CHECK FAILURE CAUSE OF P0130.

Perform the step 1 of DTC P0130.

CHECK : ***Is the failure cause of P0130 in the fuel system?***

YES : Check fuel system.

NOTE:
In this case, it is not necessary to inspect DTC P0136.

NO : Go to step **10Q3**.

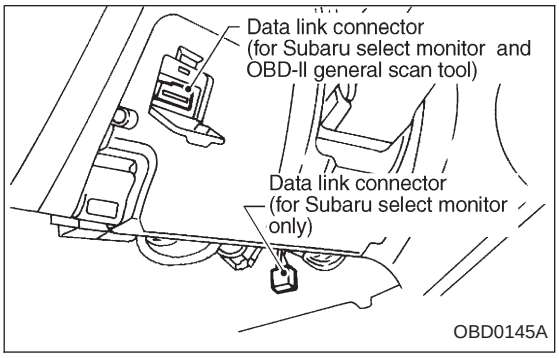

10Q3	CHECK REAR OXYGEN SENSOR DATA.

1) Turn ignition switch to OFF.
2) Connect Subaru Select Monitor or OBD-II general scan tool to data link connector.
3) Start the engine, and turn Subaru Select Monitor or OBD-II general scan tool switch to ON.
4) Warm-up the engine until engine coolant temperature is above 70°C (160°F), and keep the engine speed at 2,000 rpm to 3,000 rpm for two minutes.

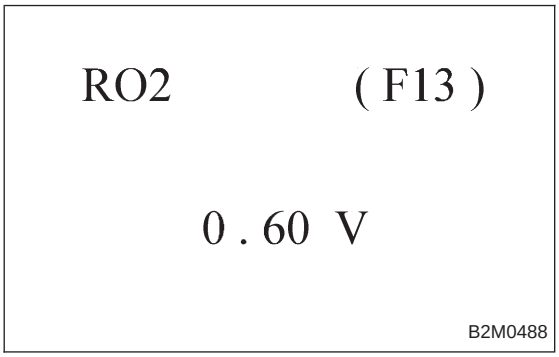

5) Read data on Subaru Select Monitor or OBD-II general scan tool.

- Subaru Select Monitor

Designate mode using function key.

Function mode: F13

- F13: Rear oxygen sensor output signal is indicated.

CHECK : ***Does the value fluctuate in function mode F13?***

YES : Go to step **10Q5**.

NO : Go to next CHECK .

CHECK : ***Is the value fixed between 0.2 and 0.4 V in function mode F13?***

YES : Go to step **10Q4**.

NO : Replace rear oxygen sensor.

● OBD-II general scan tool
For detailed operation procedures, refer to the OBD-II General Scan Tool Instruction Manual.

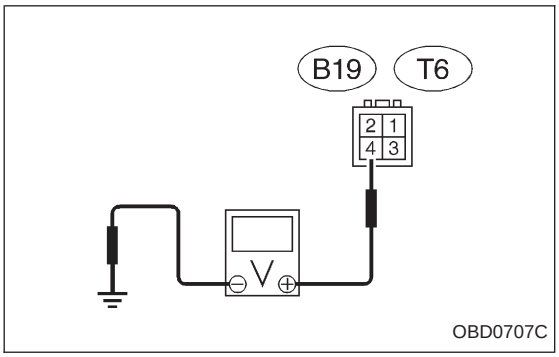

10Q4	CHECK HARNESS BETWEEN REAR OXYGEN SENSOR AND ECM CONNECTOR.

1) Turn ignition switch to OFF.
2) Disconnect connector from rear oxygen sensor.
3) Turn ignition switch to ON.
4) Measure voltage between rear oxygen sensor harness connector and engine ground or chassis ground.

CHECK : ***Connector & terminal***
● 2200 cc California spec. vehicles (B19) No. 4 (+) — Engine ground (−):
● Except 2200 cc California spec. vehicles (T6) No. 4 (+) — Chassis ground (−):
Is the voltage more than 0.2 V?

YES : Replace rear oxygen sensor.

NO : Repair harness and connector.

NOTE:
In this case, repair the following:
● Open circuit in harness between rear oxygen sensor and ECM connector
● Poor contact in rear oxygen sensor connector
● Poor contact in ECM connector
● Poor contact in rear oxygen sensor connecting harness connector (Except 2200 cc California spec. vehicles)

10Q5	CHECK EXHAUST SYSTEM.

CHECK : ***Is there a fault in exhaust system?***

NOTE:
Check the following items.
● Loose installation of portions
● Damage (crack, hole etc.) of parts
● Looseness and ill fitting of parts between front oxygen sensor and rear oxygen sensor

YES : Repair or replace faulty parts.

NO : Replace rear oxygen sensor.

OBD	(FB1)
P0139	<RO2_R>

OBD0229

R: DTC P0139 — REAR OXYGEN SENSOR CIRCUIT SLOW RESPONSE —

DTC DETECTING CONDITION:

- Two consecutive driving cycles with fault

WIRING DIAGRAM:

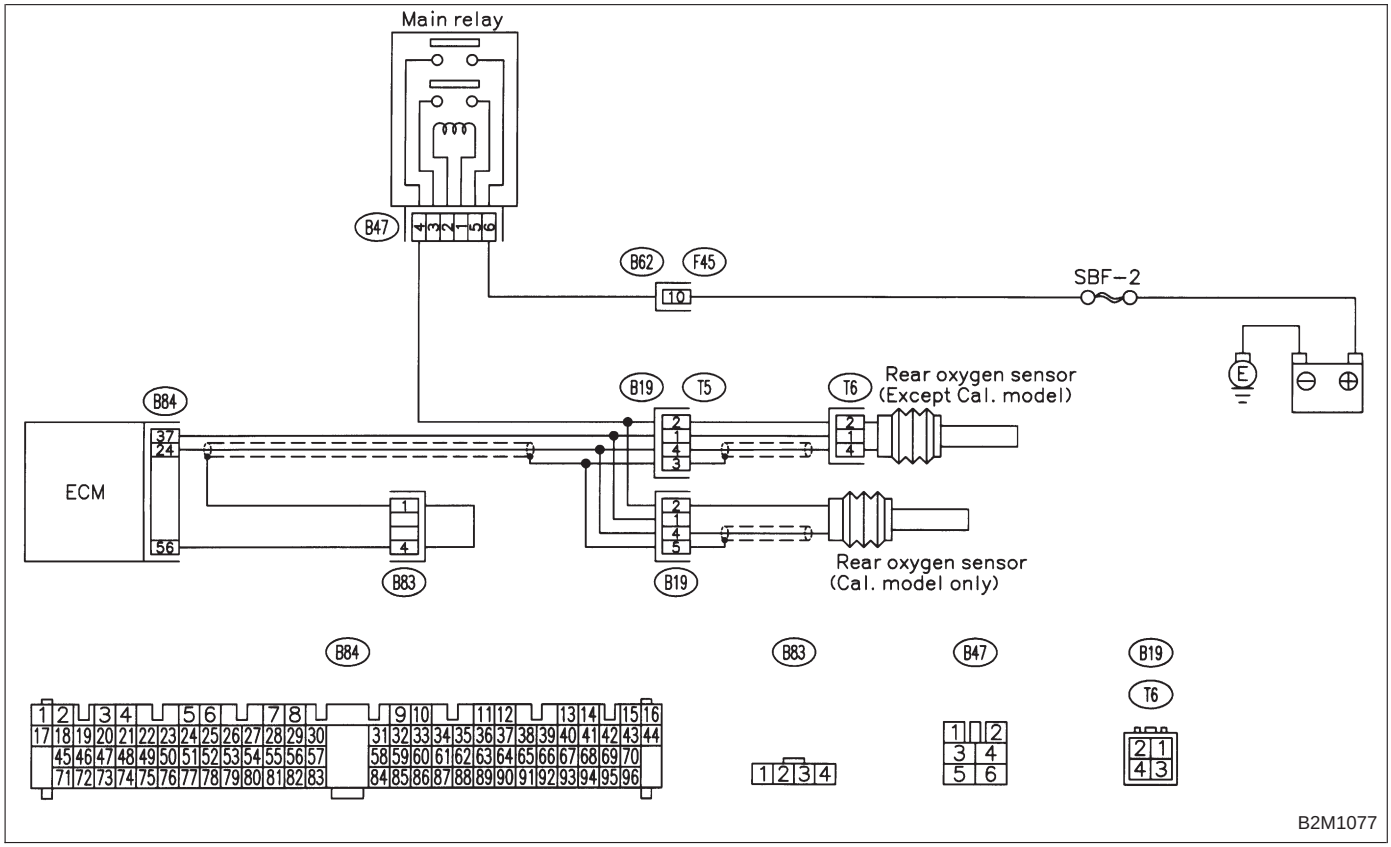

CAUTION:
After repair or replacement of faulty parts, conduct CLEAR MEMORY and INSPECTION MODES.
<Ref. to 2-7 [T3D0] and [T3E0].>

10R1	CHECK DTC P0136 ON DISPLAY.

CHECK : ***Does the Subaru select monitor or OBD-II general scan tool indicate DTC P0136?***

YES : Inspect DTC P0136 using “10. Diagnostics Chart with Trouble Code”. <Ref. to 2-7 [T10A0].>

NOTE:
In this case, it is not necessary to inspect DTC P0139.

NO : Replace rear oxygen sensor.

OBD	(FB1)
P0141	<RO2H>

OBD0232

S: DTC P0141 — REAR OXYGEN SENSOR HEATER CIRCUIT MALFUNCTION —

DTC DETECTING CONDITION:

- Two consecutive driving cycles with fault

WIRING DIAGRAM:

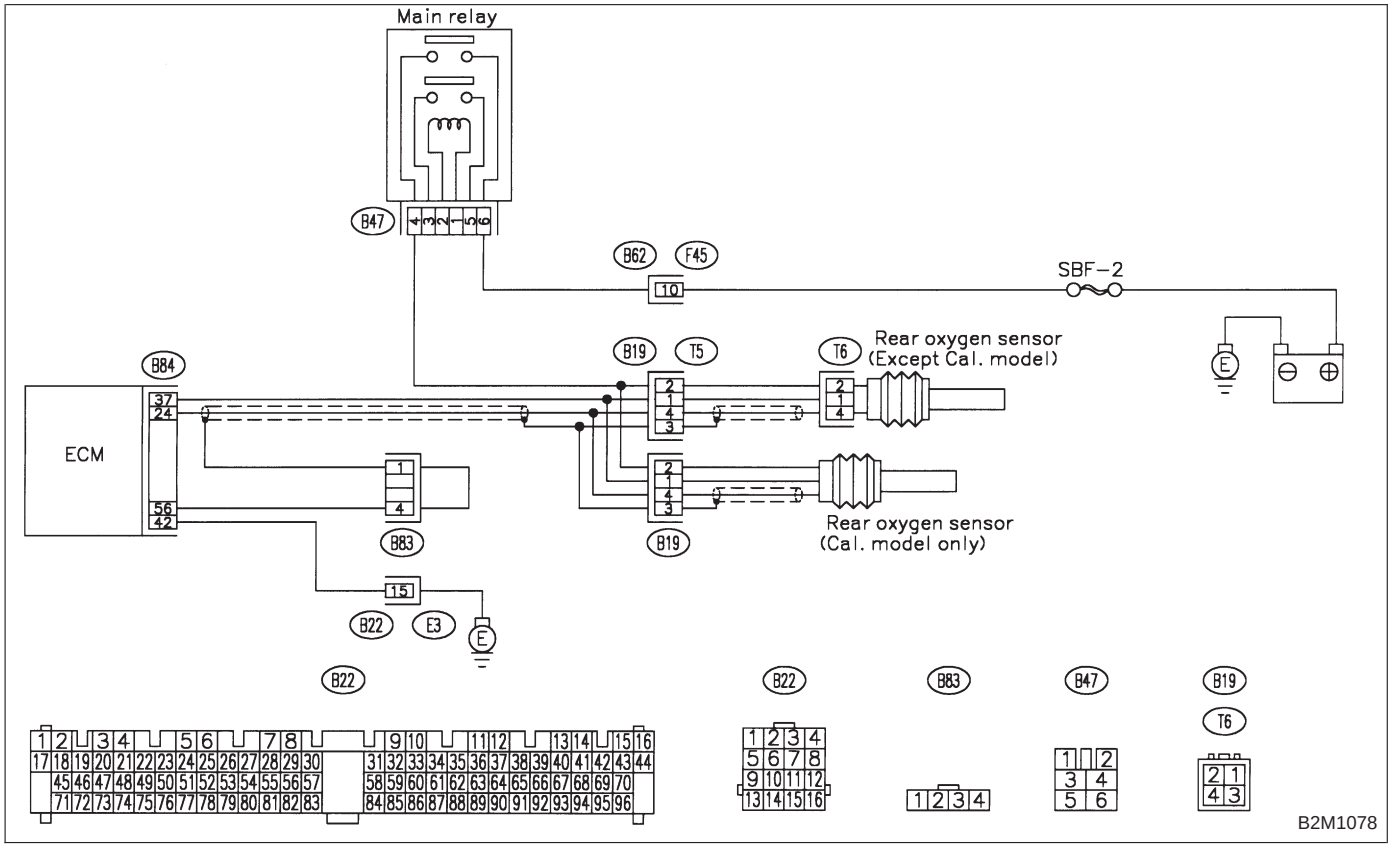

CAUTION:
After repair or replacement of faulty parts, conduct CLEAR MEMORY and INSPECTION MODES.
<Ref. to 2-7 [T3D0] and [T3E0].>

10S1	CHECK DTC P0135 ON DISPLAY.

CHECK : ***Does the Subaru select monitor or OBD-II general scan tool indicate DTC P0141 and P0135 at the same time?***

YES : Go to next step 1).

NO : Go to step **10S2**.

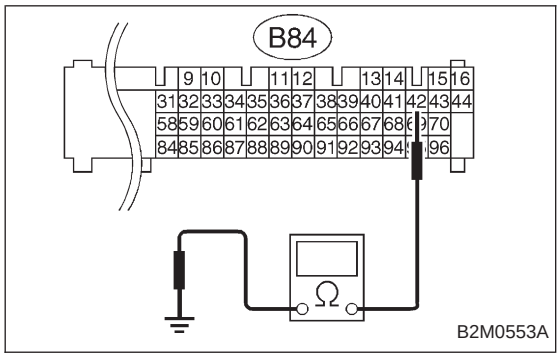

1) Turn ignition switch to OFF.
2) Disconnect connector from ECM.
3) Measure resistance of harness between ECM connector and chassis ground.

CHECK : ***Connector & terminal (B84) No. 42 — Chassis ground: Is the resistance less than 5 Ω?***

YES : Repair poor contact in ECM connector.

NO : Repair harness and connector.

NOTE:
In this case, repair the following:
- Open circuit in harness between ECM and coupling connector (B22)
- Open circuit in harness between coupling connector (B22) and engine grounding terminal
- Poor contact in rear oxygen sensor connector
- Poor contact in rear oxygen sensor connecting harness connector (B19)
- Poor contact in coupling connector (B22)

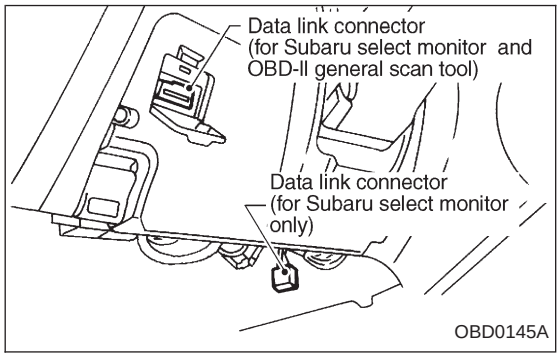

10S2	CONNECT SUBARU SELECT MONITOR OR THE OBD-II GENERAL SCAN TOOL, AND READ DATA.

1) Turn ignition switch to OFF.
2) Connect Subaru Select Monitor or the OBD-II general scan tool to data link connector.
3) Turn ignition switch to ON and Subaru Select Monitor or OBD-II general scan tool switch to ON.
4) Start engine.

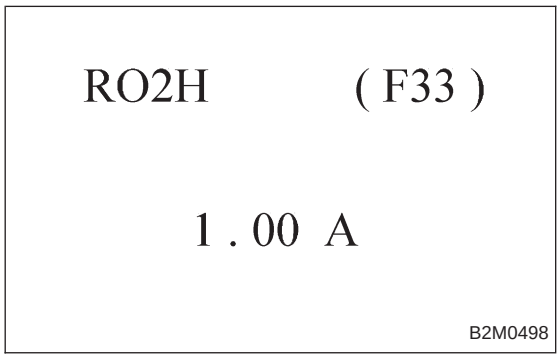

5) Read data on Subaru Select Monitor or OBD-II general scan tool.
- Subaru Select Monitor

Designate mode using function key.

Function mode: F33

- F33: Rear oxygen sensor heater current is indicated.

CHECK : ***Is the value more than 0.2 A in function mode F33?***

YES : Repair connector.

NOTE:
In this case, repair the following:
- Poor contact in rear oxygen sensor connector
- Poor contact in rear oxygen sensor connecting harness connector
- Poor contact in ECM connector

NO : Go to step **10S3**.

- OBD-II scan tool

For detailed operation procedures, refer to the OBD-II General Scan Tool Instruction Manual.

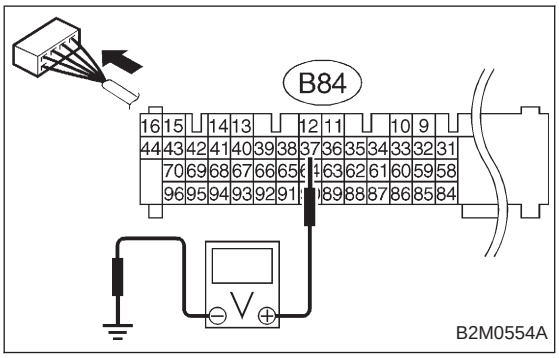

10S3	CHECK OUTPUT SIGNAL FROM ECM. (USING VOLTAGE METER.)

1) Start and idle the engine.
2) Measure voltage between ECM connector and chassis ground.

CHECK : ***Connector & terminal***
(B84) No. 37 (+) — Chassis ground (−):
Is the voltage less than 1.0 V?

YES : Go to step **10S4**.

NO : Go to next CHECK .

CHECK : ***Does the voltage change less than 1.0 V by shaking harness and connector of ECM while monitoring the value with voltage meter?***

YES : Repair poor contact in ECM connector.

NO : Go to next step 3).

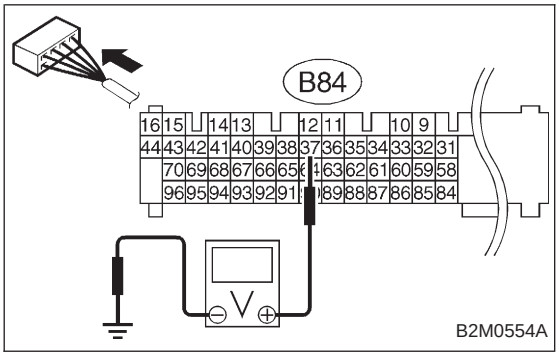

3) Disconnect connector from rear oxygen sensor.
4) Measure voltage between ECM connector and chassis ground.

CHECK : ***Connector & terminal***
(B84) No. 37 (+) — Chassis ground (−):
Is the voltage less than 1.0 V?

YES : Replace ECM.

NO : Repair battery short circuit in harness between ECM and rear oxygen sensor connector. After repair, replace ECM.

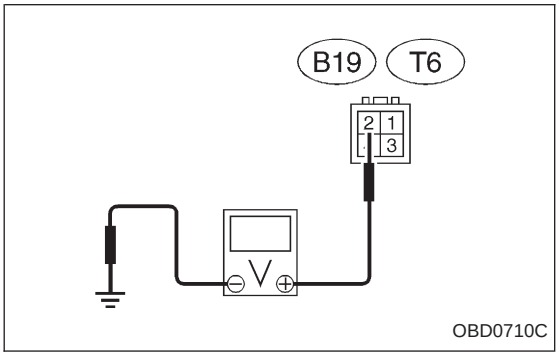

10S4	CHECK POWER SUPPLY TO REAR OXYGEN SENSOR.

1) Turn ignition switch to OFF.
2) Disconnect connector from rear oxygen sensor.
3) Turn ignition switch to ON.
4) Measure voltage between rear oxygen sensor connector and engine ground or chassis ground.

CHECK : ***Connector & terminal***
● 2200 cc California spec. vehicles
(B19) No. 2 (+) — Engine ground (−):

● Except 2200 cc California spec. vehicles (T6) No. 2 (+) — Chassis ground (−): Is the voltage more than 10 V?

YES : Go to step **10S5**.

NO : Repair power supply line.

NOTE:
In this case, repair the following:
● Open circuit in harness between main relay and rear oxygen sensor connector
● Poor contact in rear oxygen sensor connector
● Poor contact in rear oxygen sensor connecting harness connector (Except 2200 cc California spec. vehicles)

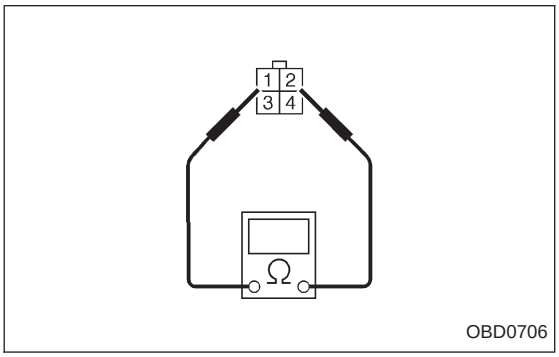

10S5	CHECK REAR OXYGEN SENSOR.

1) Turn ignition switch to OFF.
2) Measure resistance between rear oxygen sensor connector terminals.

CHECK : ***Terminals No. 1 — No. 2: Is the resistance less than 30 Ω?***

YES : Repair harness and connector.

NOTE:
In this case, repair the following:
● Open circuit in harness between rear oxygen sensor and ECM connector
● Poor contact in rear oxygen sensor connector
● Poor contact in ECM connector
● Poor contact in rear oxygen sensor connecting harness connector

NO : Replace rear oxygen sensor.

OBD	(FB1)
P0170	<FUEL>

OBD0240

T: DTC P0170
— FUEL TRIM MALFUNCTION —

DTC DETECTING CONDITION:

- Two consecutive driving cycles with fault

TROUBLE SYMPTOM:

- Erroneous idling
- Engine stalls.
- Poor driving performance

CAUTION:
After repair or replacement of faulty parts, conduct CLEAR MEMORY and INSPECTION MODE.
<Ref. to 2-7 [T3D0] and [T3E0].>

10T1	CHECK EXHAUST SYSTEM.

CHECK : ***Are there holes or loose bolts on exhaust system?***

YES : Repair exhaust system.

NO : Go to step **10T2**.

10T2	CHECK AIR INTAKE SYSTEM.

CHECK : ***Are there holes, loose bolts or disconnection of hose on air intake system?***

YES : Repair air intake system.

NO : Go to step **10T3**.

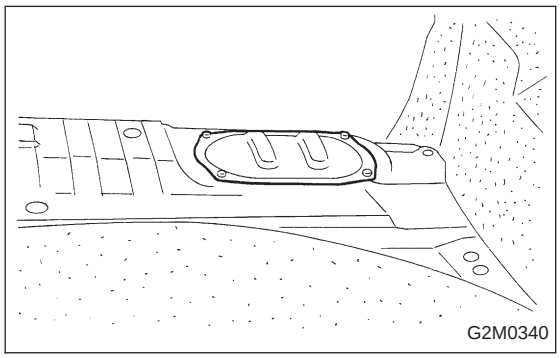

G2M0340

10T3	CHECK FUEL PRESSURE.

1) Release fuel pressure.
   (1) Remove fuel pump access hole lid located on the right rear of trunk compartment floor (Sedan) or luggage compartment floor (Wagon).

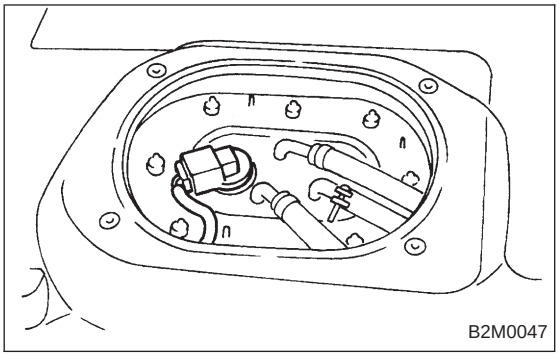

(2) Disconnect connector from fuel tank.
(3) Start the engine, and run it until it stalls.
(4) After stopping the engine, crank the engine for 5 to 7 seconds to reduce fuel pressure.
(5) Turn ignition switch to OFF.

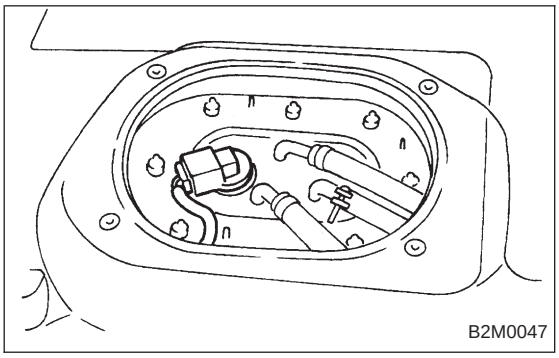

2) Connect connector to fuel tank.

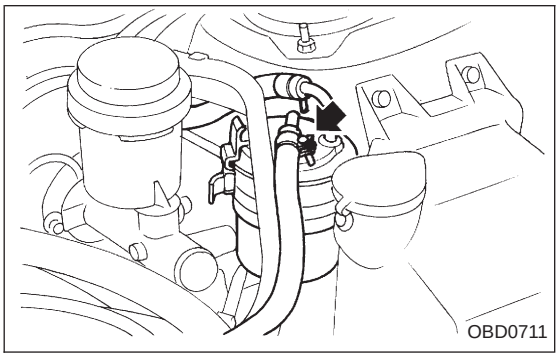

3) Disconnect fuel delivery hose from fuel filter, and connect fuel pressure gauge.

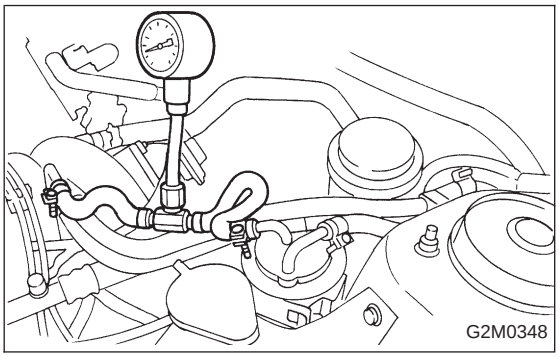

4) Start the engine and idle while gear position is neutral.
5) Measure fuel pressure while disconnecting pressure regulator vacuum hose from intake manifold.

CHECK : ***Is fuel pressure between 226 and 275 kPa (2.3 — 2.8 kg/cm^2, 33 — 40 psi)?***

YES : Go to next step 6).

NO : Repair the following items.

Fuel pressure too high	● Clogged fuel return line or bent hose
Fuel pressure too low	● Improper fuel pump discharge ● Clogged fuel supply line

6) After connecting pressure regulator vacuum hose, measure fuel pressure.

CHECK : ***Is fuel pressure between 157 and 206 kPa (1.6 — 2.1 kg/cm^2, 23 — 30 psi)?***

YES : Go to step **10T4**.

NO : Repair the following items.

Fuel pressure too high	● Faulty pressure regulator ● Clogged fuel return line or bent hose
Fuel pressure too low	● Faulty pressure regulator ● Improper fuel pump discharge ● Clogged fuel supply line

WARNING:
Before removing fuel pressure gauge, release fuel pressure.

NOTE:

● If fuel pressure does not increase, squeeze fuel return hose 2 to 3 times, then measure fuel pressure again.
● If out of specification as measured at this step, check or replace pressure regulator and pressure regulator vacuum hose.

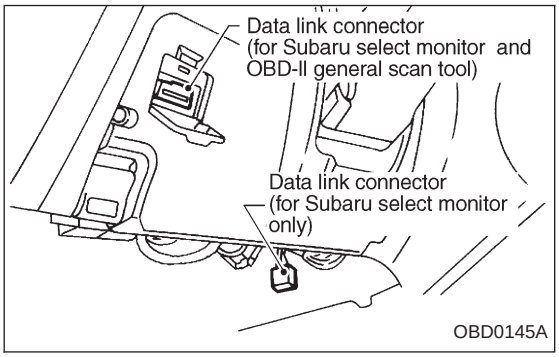

10T4	**CHECK ENGINE COOLANT TEMPERATURE SENSOR.** **<REF. TO 2-7 H: DTC P0116 [T10H0] OR I: DTC P0117 [T10I0].>**

1) Turn ignition switch to OFF.
2) Connect the Subaru Select Monitor or the OBD-II general scan tool to data link connector.
3) Start the engine and warm-up completely.

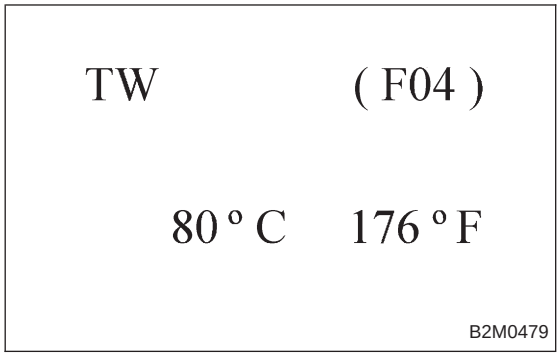

4) Read data on Subaru Select Monitor or the OBD-II general scan tool.

● Subaru Select Monitor
Designate mode using function key.

Function mode: F04

● F04: Water temperature is indicated in "°C" and "°F".

CHECK ***: Is temperature greater than 60°C or 140°F in function mode F04?***

YES : Go to step **10T5**.

NO : Replace engine coolant temperature sensor.

● OBD-II general scan tool
For detailed operation procedures, refer to the OBD-II General Scan Tool Instruction Manual.

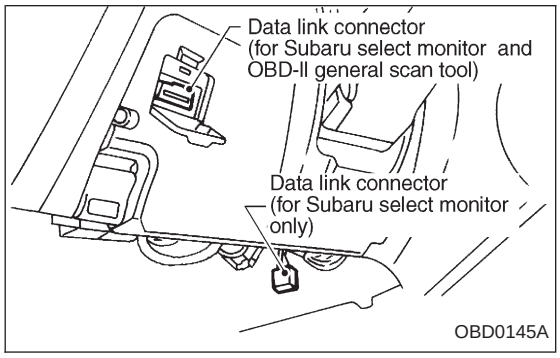

10T5	CHECK MASS AIR FLOW SENSOR.

1) Turn ignition switch to OFF.
2) Connect the Subaru Select Monitor or the OBD-II general scan tool to data link connector.
3) Start the engine and warm-up engine until coolant temperature is greater than 60°C (140°F).
4) Place the selector lever in "N" or "P" position.
5) Turn A/C switch to OFF.
6) Turn all accessory switches to OFF.

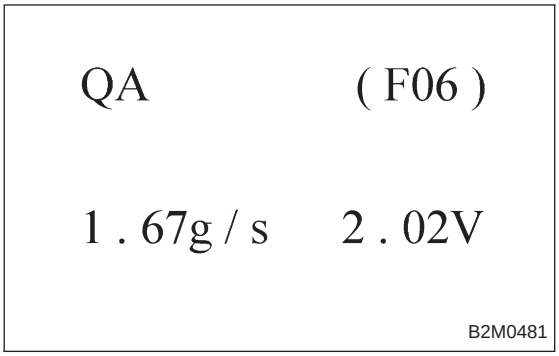

7) Read data on Subaru Select Monitor or OBD-II general scan tool.

● Subaru Select Monitor
Designate mode using function key.

Function mode: F06

● F06: Mass air flow and voltage input from mass air flow sensor are shown on display.

CHECK ***: Is the voltage in function mode F06 within the specifications shown in the following table?***

Model	Engine speed	Specified value
2200 cc	Idling	1.7 — 3.3 (g/sec)
	2,500 rpm	7.1 — 14.2 (g/sec)
2500 cc	Idling	2.2 — 4.2 (g/sec)
	2,500 rpm	8.6 — 14.5 (g/sec)

YES : Contact with SOA service.

NOTE:
Inspection by DTM is required, because probable cause is deterioration of multiple parts.

NO : Replace mass air flow sensor.

● OBD-II general scan tool
For detailed operation procedures, refer to the OBD-II General Scan Tool Instruction Manual.

OBD (FB1)

P0181 <TNKT_F>

H2M1350

U: DTC P0181 — FUEL TEMPERATURE SENSOR A CIRCUIT RANGE/PERFORMANCE PROBLEM —

DTC DETECTING CONDITION:

- Two consecutive driving cycles with fault

WIRING DIAGRAM:

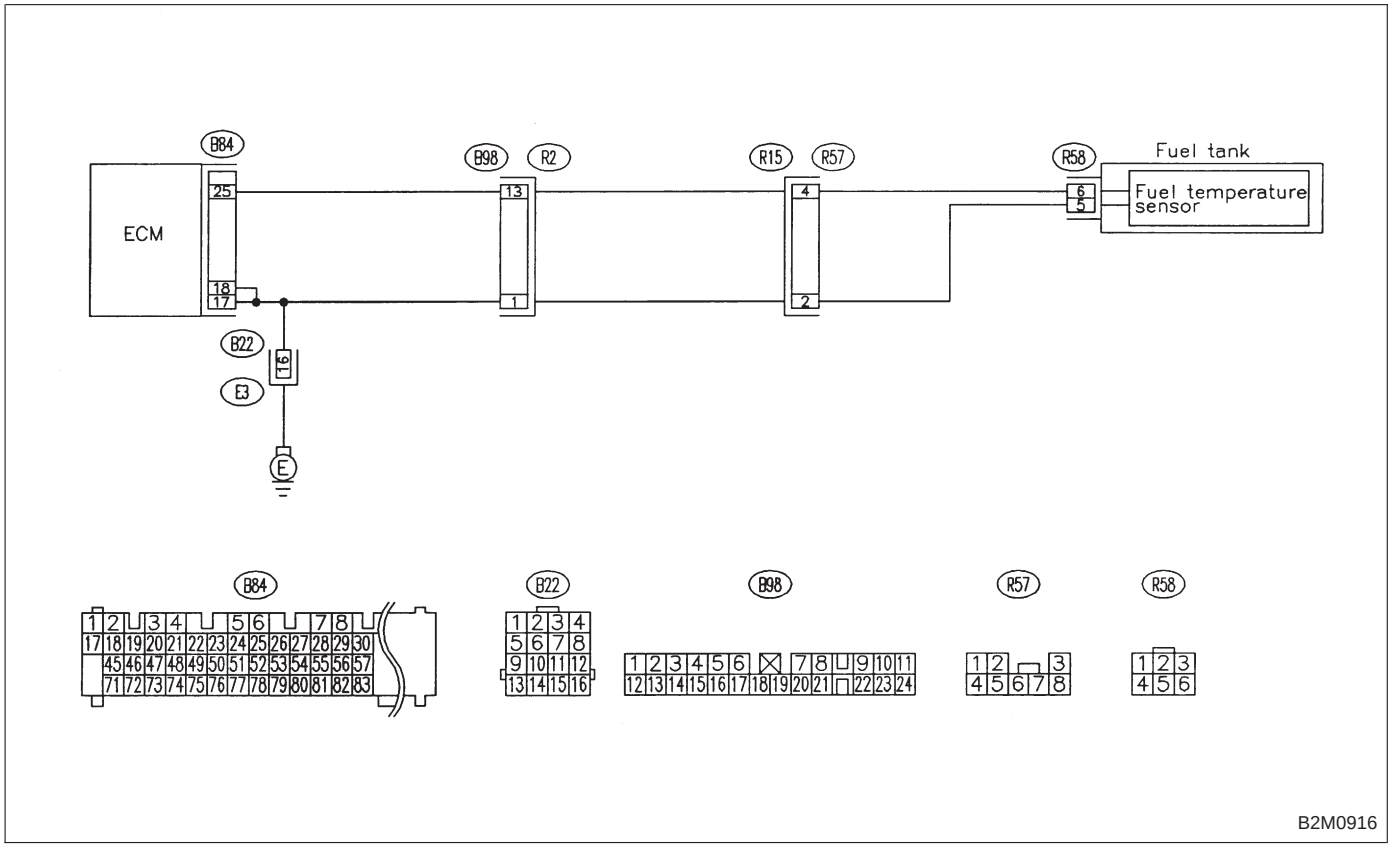

CAUTION:
After repair or replacement of faulty parts, conduct CLEAR MEMORY and INSPECTION MODES.
<Ref. to 2-7 [T3D0] and [T3E0].>

10U1	**CHECK DTC P0182 OR P0183 ON DISPLAY.**

CHECK : ***Does the Subaru select monitor or OBD-II general scan tool indicate DTC P0182 or P0183?***

YES : Inspect DTC P0182 or P0183 using “10. Diagnostics Chart with Trouble Code”. <Ref. to 2-7 [T10A0].>

NOTE:
In this case, it is not necessary to inspect DTC P0181.

NO : Replace fuel temperature sensor.

OBD (FB1)

P0182 <TNKT_LOW>

B2M1079

V: DTC P0182 — FUEL TEMPERATURE SENSOR A CIRCUIT LOW INPUT —

DTC DETECTING CONDITION:

- Immediately at fault recognition

WIRING DIAGRAM:

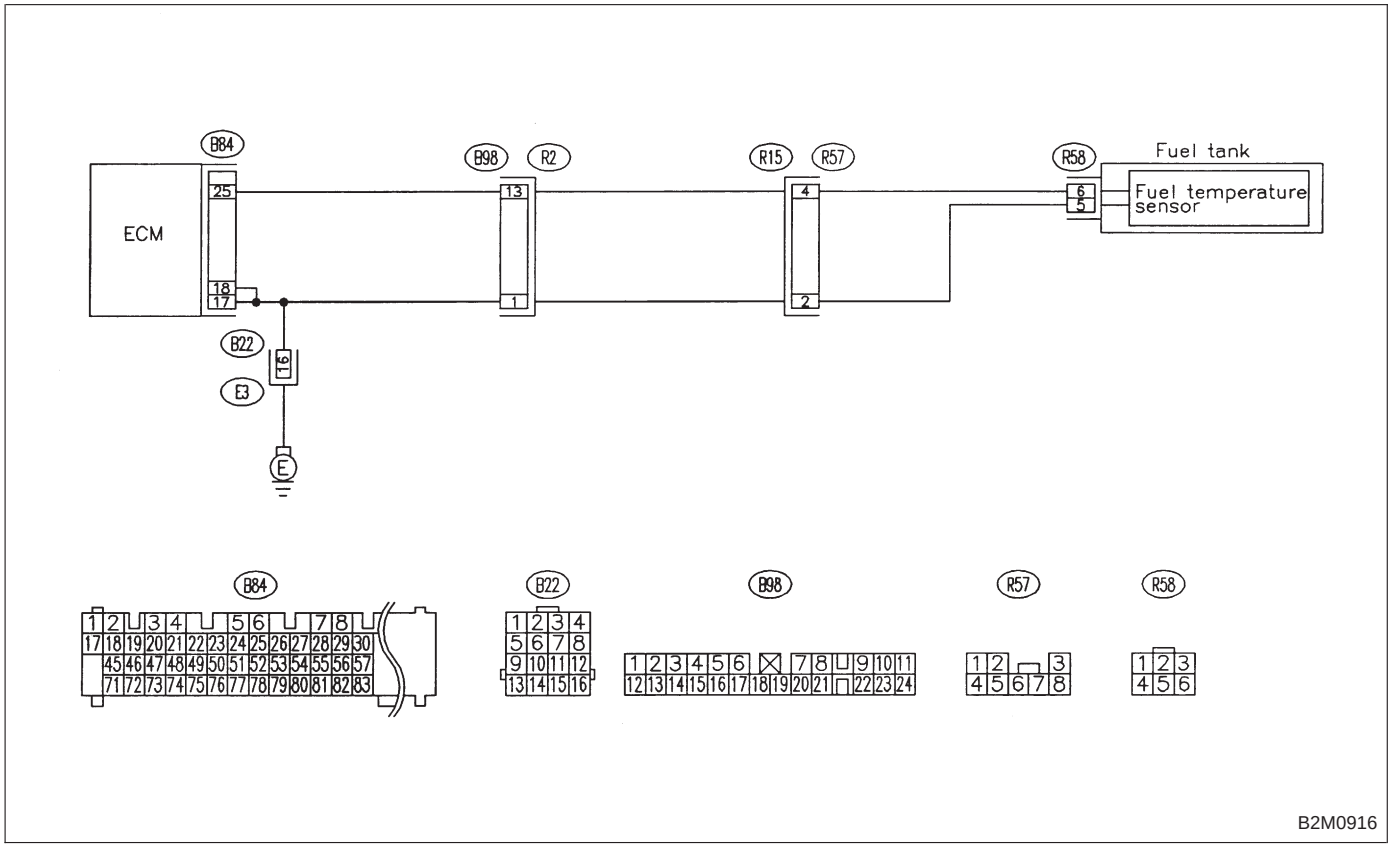

B2M0916

CAUTION:
After repair or replacement of faulty parts, conduct CLEAR MEMORY and INSPECTION MODES.
<Ref. to 2-7 [T3D0] and [T3E0].>

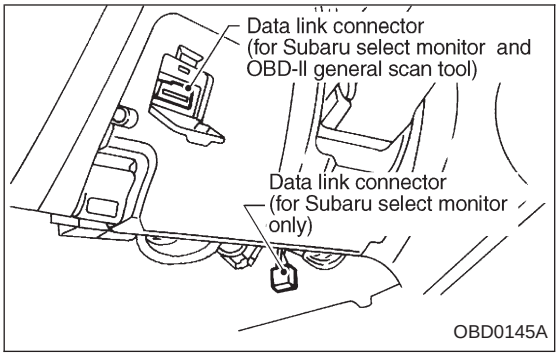

10V1	CONNECT SUBARU SELECT MONITOR OR THE OBD-II GENERAL SCAN TOOL, AND READ DATA.

1) Turn ignition switch to OFF.
2) Connect Subaru Select Monitor or the OBD-II general scan tool to data link connector.
3) Turn ignition switch to ON and Subaru Select Monitor or OBD-II general scan tool switch to ON.
4) Start engine.

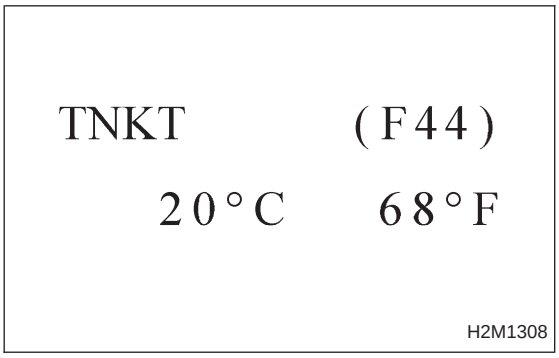

5) Read data on Subaru Select Monitor or OBD-II general scan tool.

● Subaru Select Monitor
Designate mode using function key.

Function mode: F44

● F44: Fuel temperature is indicated in "°C" and "°F".

CHECK ***: Is the value greater than 150°C or 300°F in function mode F44?***

YES : Go to step **10V2**.

NO : Even if MIL lights up, the circuit has returned to a normal condition at this time.

● OBD-II general scan tool
For detailed operation procedures, refer to the OBD-II General Scan Tool Instruction Manual.

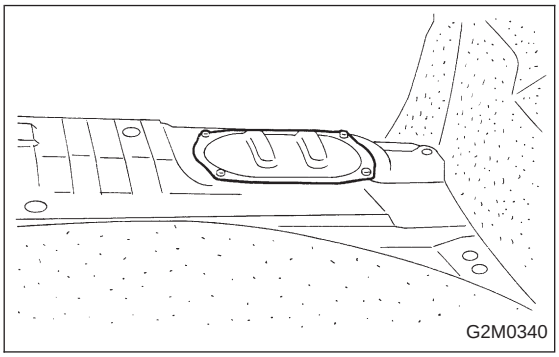

10V2	CHECK HARNESS BETWEEN FUEL TEMPERATURE SENSOR AND ECM CONNECTOR.

1) Turn ignition switch to OFF.
2) Remove access hole lid.
3) Disconnect connector from fuel pump.

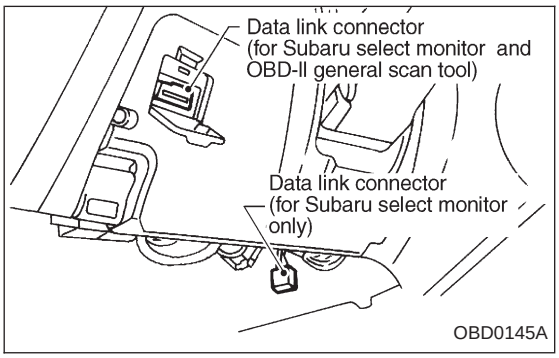

4) Connect Subaru Select Monitor or the OBD-II general scan tool to data link connector.

5) Turn ignition switch and Subaru Select Monitor or OBD-II general scan tool switch to ON.

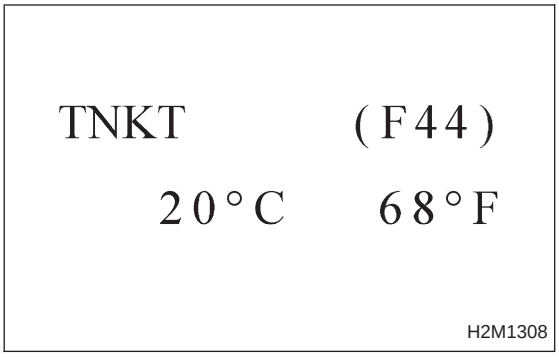

6) Read data on Subaru Select Monitor or the OBD-II general scan tool.

● Subaru Select Monitor
Designate mode using function key.

Function mode: F44

● F44: Fuel temperature is indicated in "°C" and "°F".

CHECK ***: Is the value less than −40°C or −40°F in function mode F44?***

YES : Replace fuel temperature sensor.

NO : Repair ground short circuit in harness between fuel pump and ECM connector.

● OBD-II general scan tool
For detailed operation procedures, refer to the OBD-II General Scan Tool Instruction Manual.

OBD (FB1)

P0183 <TNKT_HI>

B2M1080

W: DTC P0183 — FUEL TEMPERATURE SENSOR A CIRCUIT HIGH INPUT —

DTC DETECTING CONDITION:

- Immediately at fault recognition

WIRING DIAGRAM:

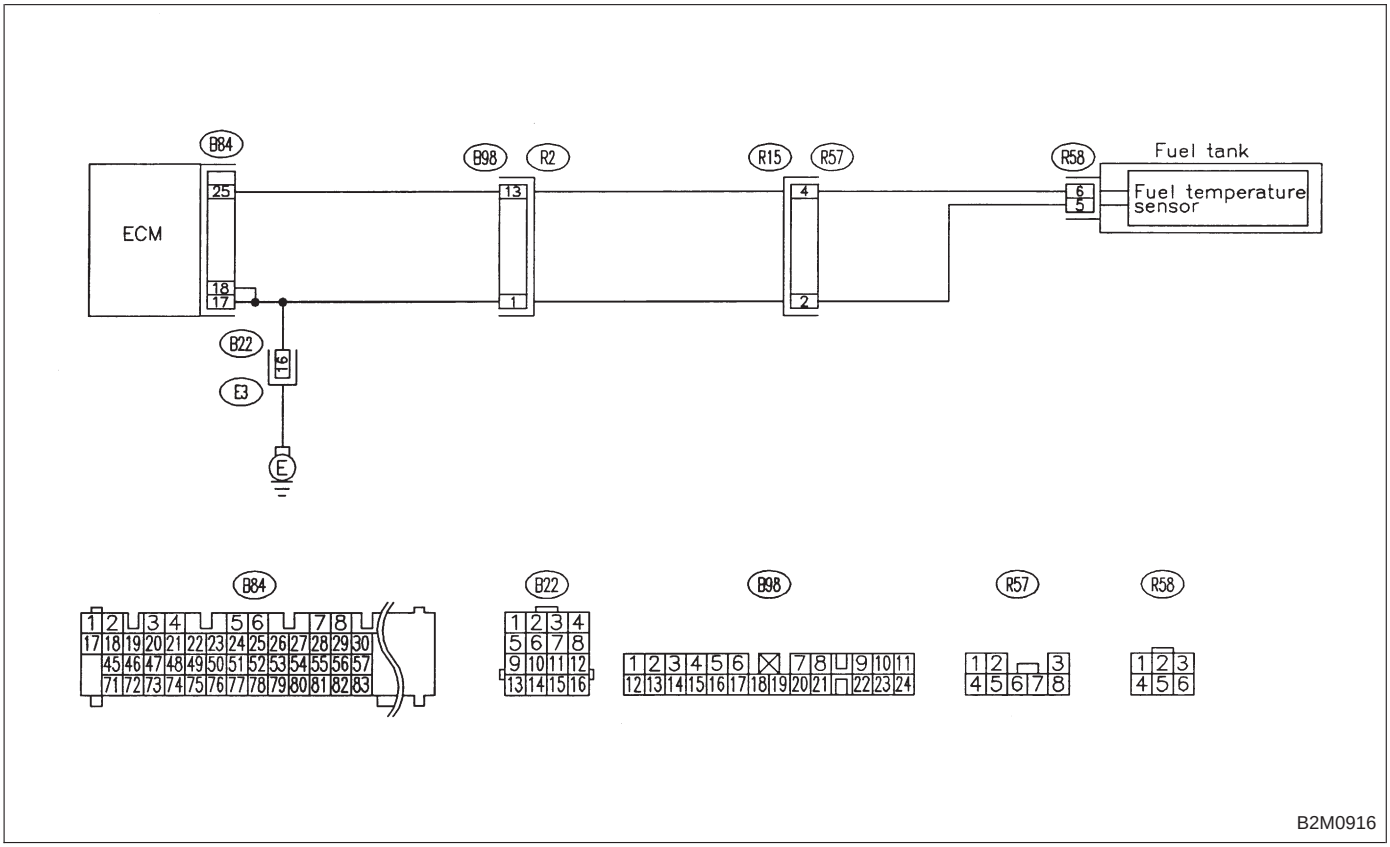

B2M0916

CAUTION:
After repair or replacement of faulty parts, conduct CLEAR MEMORY and INSPECTION MODES.
<Ref. to 2-7 [T3D0] and [T3E0].>

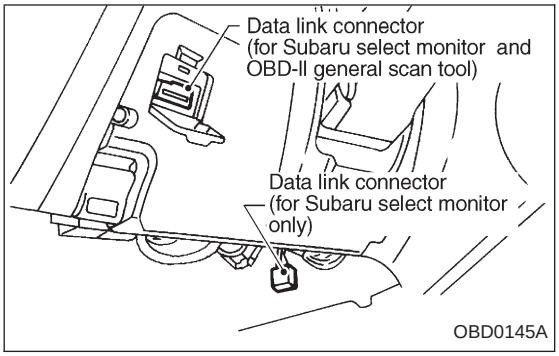

10W1	CONNECT SUBARU SELECT MONITOR OR THE OBD-II GENERAL SCAN TOOL, AND READ DATA.

1) Turn ignition switch to OFF.
2) Connect Subaru Select Monitor or the OBD-II general scan tool to data link connector.
3) Turn ignition switch to ON and Subaru Select Monitor or OBD-II general scan tool switch to ON.
4) Start engine.

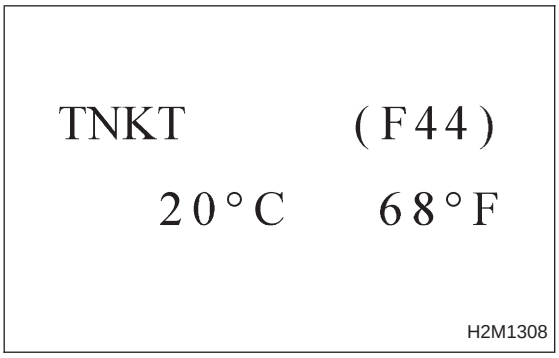

5) Read data on Subaru Select Monitor or OBD-II general scan tool.

- Subaru Select Monitor

Designate mode using function key.

Function mode: F44

- F44: Fuel temperature is indicated in "°C" and "°F".

CHECK : ***Is the value less than −40°C or −40°F in function mode F44?***

YES : Go to step **10W2**.

NO : Repair poor contact.

NOTE:
In this case, repair the following:
- Poor contact in fuel pump connector
- Poor contact in ECM connector
- Poor contact in coupling connector (B22, B98 and R57)
- OBD-II general scan tool

For detailed operation procedures, refer to the OBD-II General Scan Tool Instruction Manual.

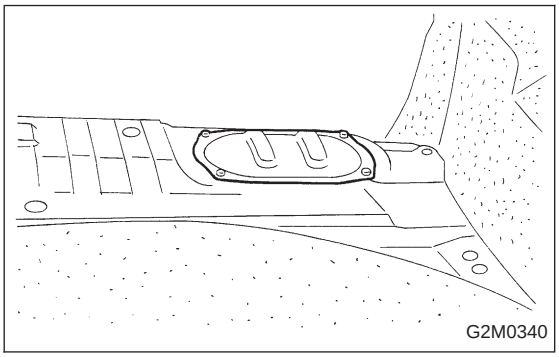

10W2	CHECK HARNESS BETWEEN FUEL TEMPERATURE SENSOR AND ECM CONNECTOR.

1) Turn ignition switch to OFF.
2) Remove access hole lid.
3) Disconnect connector from fuel pump.

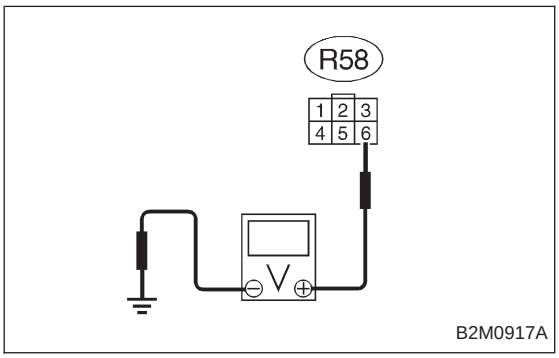

4) Measure voltage between fuel pump connector and chassis ground.

CHECK : ***Connector & terminal (R58) No. 6 (+) — Chassis ground (−): Is the voltage more than 10 V?***

YES : Repair battery short circuit in harness between ECM and fuel pump connector.

NO : Go to next step 5).

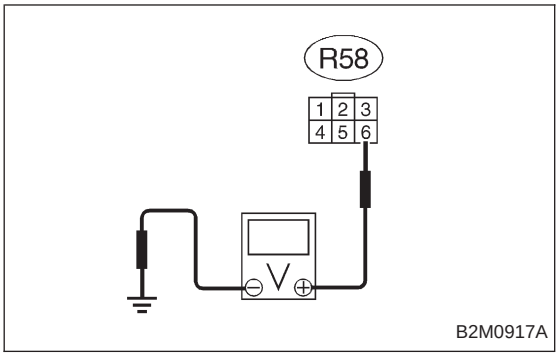

5) Turn ignition switch to ON.
6) Measure voltage between fuel pump connector and chassis ground.

CHECK : ***Connector & terminal (R58) No. 6 (+) — Chassis ground (−): Is the voltage more than 10 V?***

YES : Repair battery short circuit in harness between ECM and fuel pump connector.

NO : Go to step **10W3**.

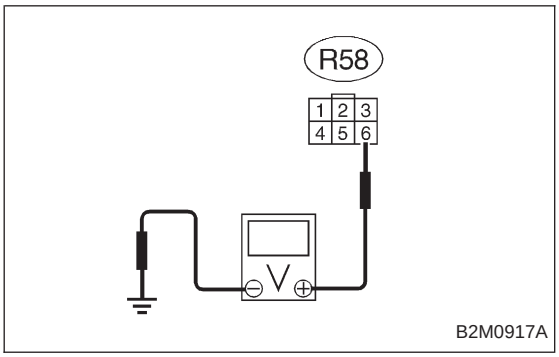

10W3	**CHECK HARNESS BETWEEN FUEL TEMPERATURE SENSOR AND ECM CONNECTOR.**

1) Measure voltage between fuel pump connector and chassis ground.

CHECK : ***Connector & terminal (R58) No. 6 (+) — Chassis ground (−): Is the voltage more than 4 V?***

YES : Go to next step 2).

NO : Repair harness and connector.

NOTE:
In this case, repair the following:
- Open circuit in harness between ECM and fuel pump connector
- Poor contact in fuel pump connector
- Poor contact in ECM connector
- Poor contact in coupling connectors (B98 and R57)

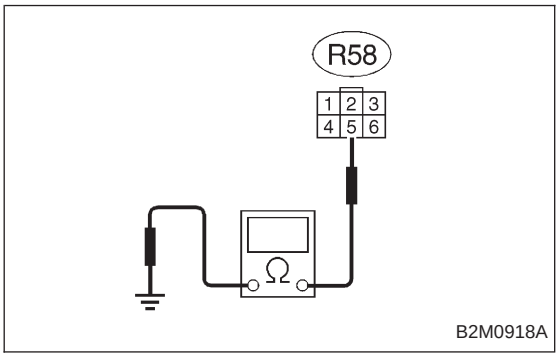

2) Turn ignition switch to OFF.
3) Measure resistance of harness between fuel pump connector and chassis ground.

CHECK : ***Connector & terminal (R58) No. 5 — Chassis ground: Is the resistance less than 5 Ω?***

YES : Replace fuel temperature sensor.

NO : Repair harness and connector.

NOTE:
In this case, repair the following:
- Open circuit in harness between ECM and fuel pump connector
- Poor contact in fuel pump connector
- Poor contact in ECM connector
- Poor contact in coupling connectors (B22, B98 and R57)

OBD (FB1)
P0261 <INJ 1>
B2M1081

X: DTC P0261
— FUEL INJECTOR CIRCUIT LOW INPUT - #1 —

OBD (FB1)
P0264 <INJ 2>
B2M1082

Y: DTC P0264
— FUEL INJECTOR CIRCUIT LOW INPUT - #2 —

OBD (FB1)
P0267 <INJ 3>
B2M1083

Z: DTC P0267
— FUEL INJECTOR CIRCUIT LOW INPUT - #3 —

OBD (FB1)
P0270 <INJ 4>
B2M1084

AA: DTC P0270
— FUEL INJECTOR CIRCUIT LOW INPUT - #4 —

DTC DETECTING CONDITION:

- Immediately at fault recognition

TROUBLE SYMPTOM:

- Failure of engine to start
- Engine stalls.
- Erroneous idling
- Rough driving

WIRING DIAGRAM:

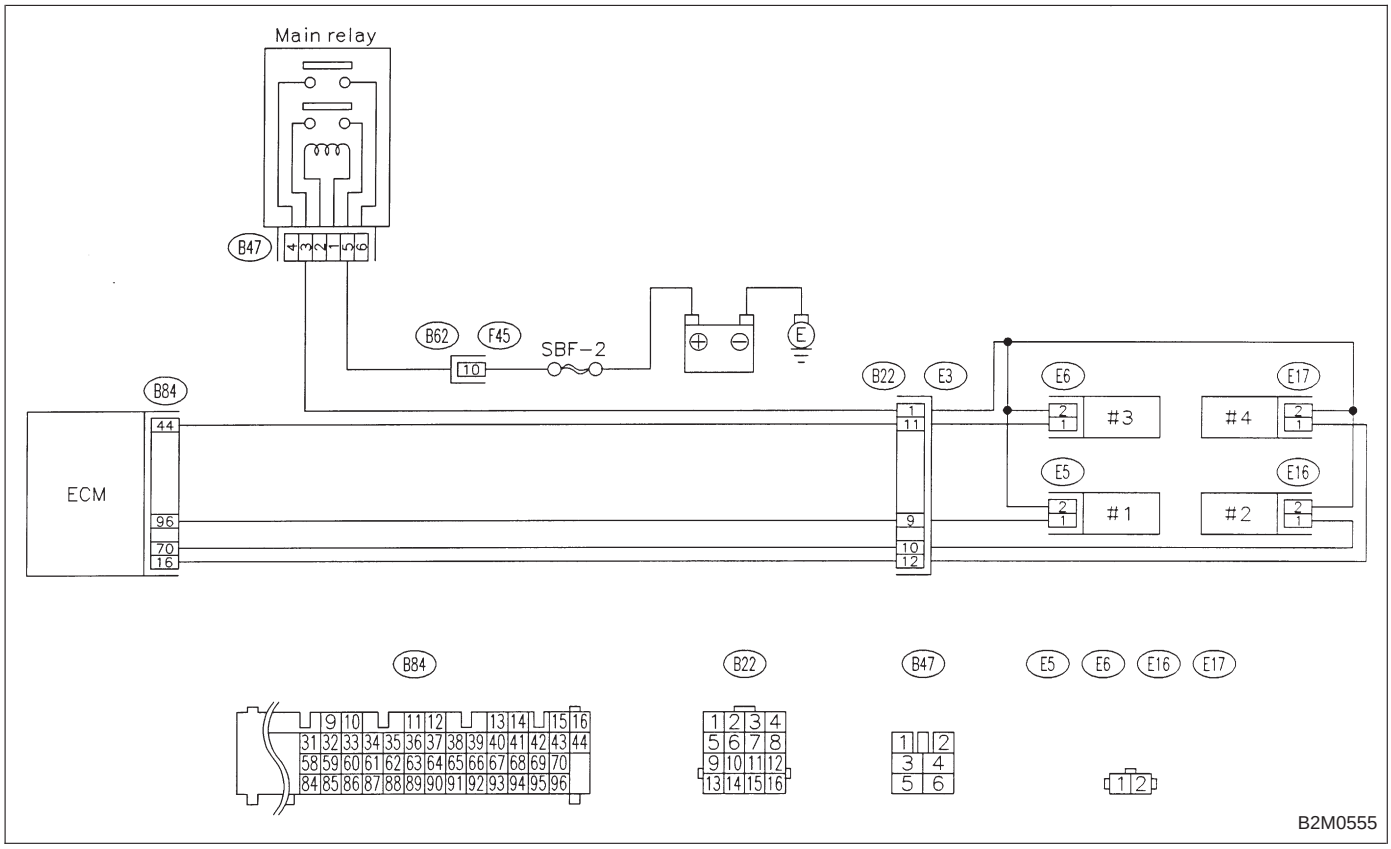

CAUTION:

- **Check or repair only faulty cylinders.**
- **After repair or replacement of faulty parts, conduct CLEAR MEMORY and INSPECTION MODES.**

<Ref. to 2-7 [T3D0] and [T3E0].>

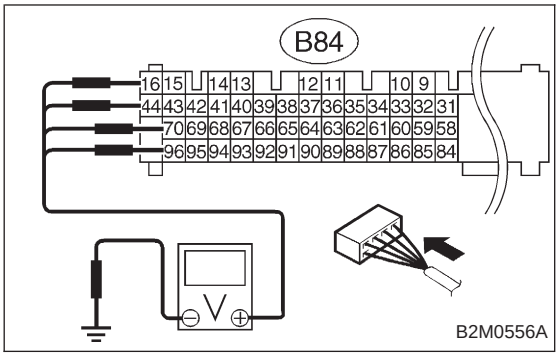

10AA1	CHECK OUTPUT SIGNAL FROM ECM.

1) Turn ignition switch to ON.
2) Measure voltage between ECM connector and chassis ground on faulty cylinders.

CHECK : ***Connector & terminal***
#1 (B84) No. 96 (+) — Chassis ground (−):
#2 (B84) No. 70 (+) — Chassis ground (−):
#3 (B84) No. 44 (+) — Chassis ground (−):
#4 (B84) No. 16 (+) — Chassis ground (−):
Is the voltage more than 10 V?

YES : Go to next CHECK .

NO : Go to step **10AA2**.

CHECK : ***Is there poor contact in ECM connector?***

YES : Repair poor contact in ECM connector.

NO : Contact with SOA service.

NOTE:
Inspection by DTM is required, because probable cause is deterioration of multiple parts.

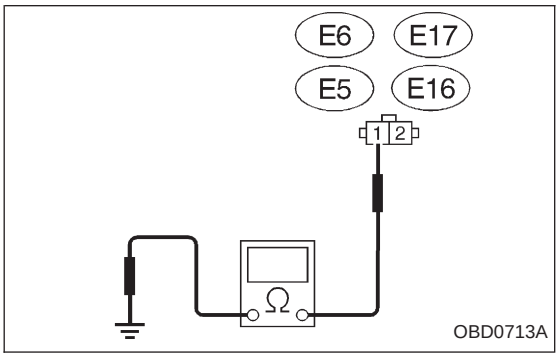

10AA2	CHECK HARNESS BETWEEN FUEL INJECTOR AND ECM CONNECTOR.

1) Turn ignition switch to OFF.
2) Disconnect connector from fuel injector on faulty cylinders.
3) Measure voltage between ECM connector and engine ground on faulty cylinders.

CHECK : ***Connector & terminal***
#1 (E5) No. 1 — Engine ground:
#2 (E16) No. 1 — Engine ground:
#3 (E6) No. 1 — Engine ground:
#4 (E17) No. 1 — Engine ground:
Is the resistance less than 10 Ω?

YES : Repair ground short circuit in harness between fuel injector and ECM connector.

NO : Go to next step 4).

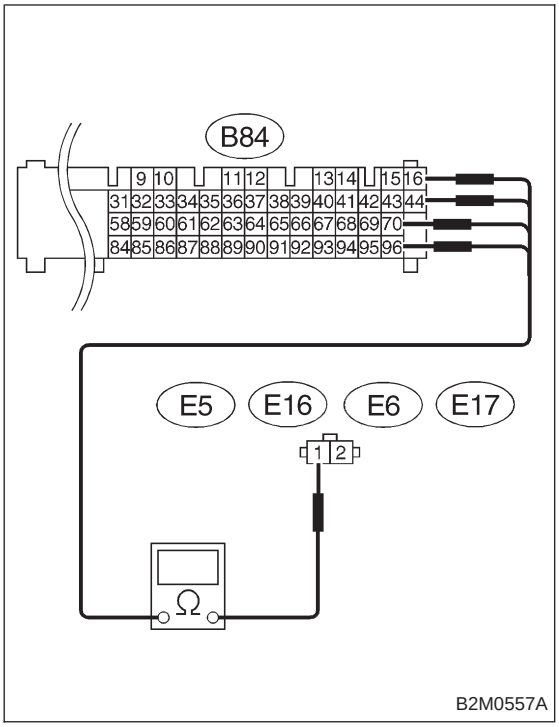

4) Measure resistance of harness connector between ECM connector and fuel injector on faulty cylinders.

CHECK : ***Connector & terminal***
#1 (B84) No. 96 — (E5) No. 1:
#2 (B84) No. 70 — (E16) No. 1:
#3 (B84) No. 44 — (E6) No. 1:
#4 (B84) No. 16 — (E17) No. 1:
Is the resistance less than 1 Ω?

YES : Go to step **10AA3**.

NO : Repair open circuit in harness between ECM and fuel injector connector.

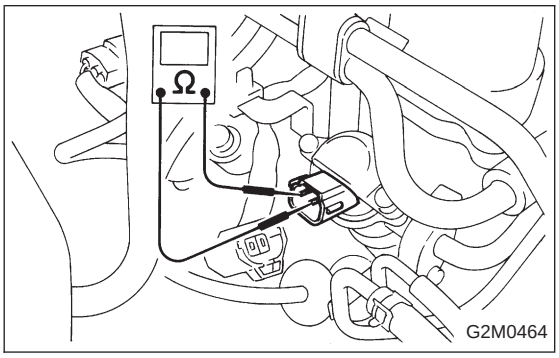

10AA3	CHECK FUEL INJECTOR.

Measure resistance between fuel injector terminals on faulty cylinder.

CHECK : ***Terminals***
No. 1 — No. 2:
Is the resistance between 5 and 20 Ω?

NO : Replace faulty fuel injector.

YES : Go to step **10AA4**.

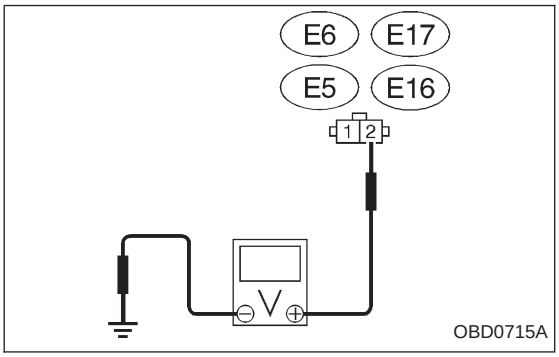

10AA4	CHECK POWER SUPPLY LINE.

1) Turn ignition switch to ON.
2) Measure voltage between fuel injector and engine ground on faulty cylinders.

CHECK : ***Connector & terminal***
#1 (E5) No. 2 (+) — Engine ground (−):
#2 (E16) No. 2 (+) — Engine ground (−):
#3 (E6) No. 2 (+) — Engine ground (−):
#4 (E17) No. 2 (+) — Engine ground (−):
Is the voltage more than 10 V?

YES : Repair poor contact in all connectors in fuel injector circuit.

NO : Repair harness and connector.

NOTE:
In this case, repair the following:
- Open circuit in harness between main relay and fuel injector connector on faulty cylinders
- Poor contact in main relay connector
- Poor contact in fuel injector connector on faulty cylinders

OBD (FB1)
P0262 <INJ1_HI>
B2M1085

AB: DTC P0262
— FUEL INJECTOR CIRCUIT HIGH INPUT - #1 —

OBD (FB1)
P0265 <INJ2_HI>
B2M1086

AC: DTC P0265
— FUEL INJECTOR CIRCUIT HIGH INPUT - #2 —

OBD (FB1)
P0268 <INJ3_HI>
B2M1087

AD: DTC P0268
— FUEL INJECTOR CIRCUIT HIGH INPUT - #3 —

OBD (FB1)
P0271 <INJ4_HI>
B2M1088

AE: DTC P0271
— FUEL INJECTOR CIRCUIT HIGH INPUT - #4 —

DTC DETECTING CONDITION:

- Immediately at fault recognition

TROUBLE SYMPTOM:

- Failure of engine to start
- Engine stalls.
- Erroneous idling
- Rough driving

WIRING DIAGRAM:

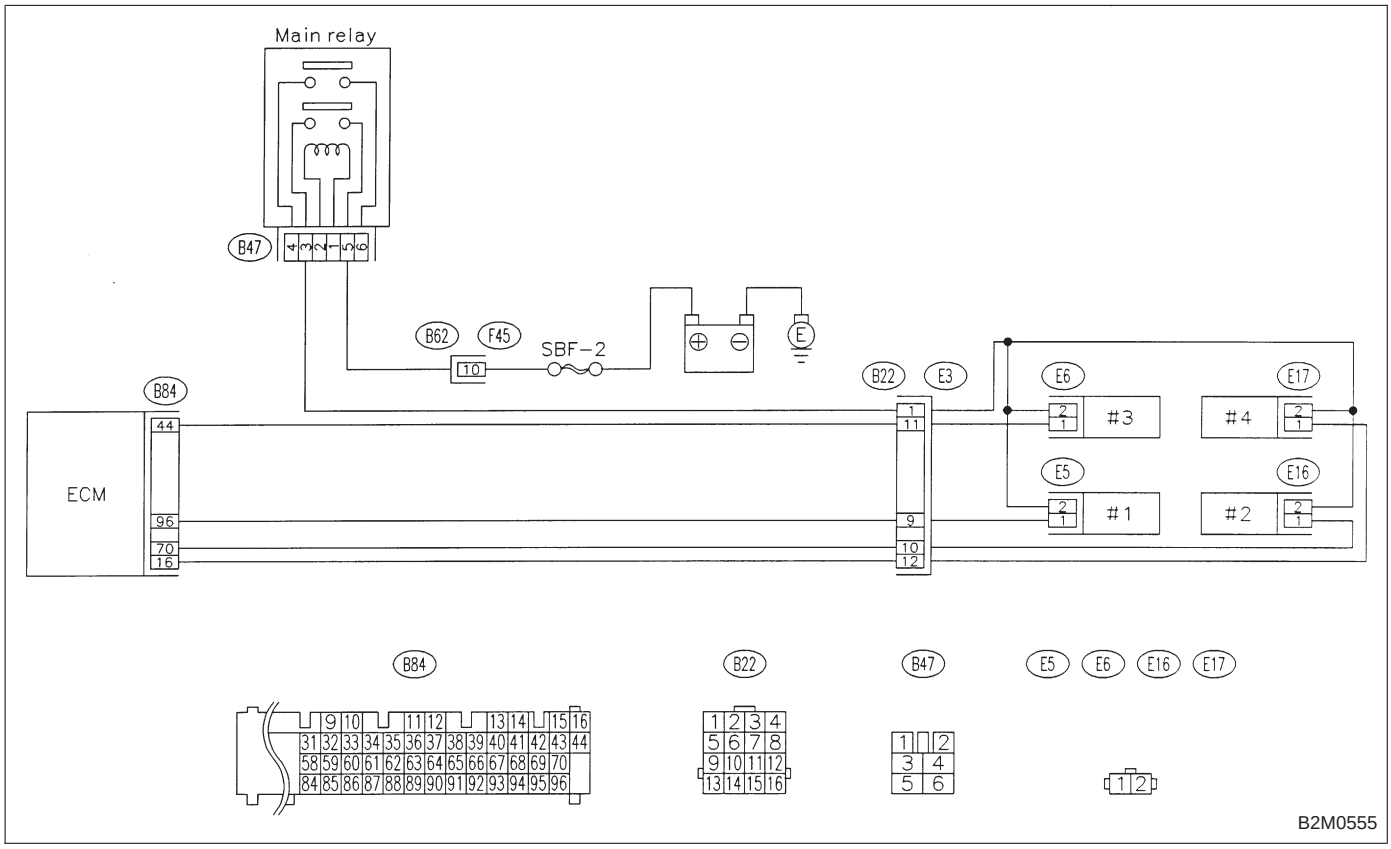

CAUTION:

- **Check or repair only faulty cylinders.**
- **After repair or replacement of faulty parts, conduct CLEAR MEMORY and INSPECTION MODES.**

<Ref. to 2-7 [T3D0] and [T3E0].>

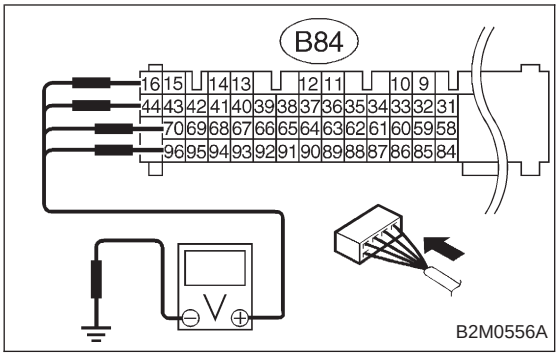

10AE1	CHECK OUTPUT SIGNAL FROM ECM.

1) Turn ignition switch to ON.
2) Measure voltage between ECM connector and chassis ground on faulty cylinders.

CHECK : ***Connector & terminal***
#1 (B84) No. 96 (+) — Chassis ground (–):
#2 (B84) No. 70 (+) — Chassis ground (–):
#3 (B84) No. 44 (+) — Chassis ground (–):
#4 (B84) No. 16 (+) — Chassis ground (–):
Is the voltage more than 10 V?

YES : Go to step **10AE2**.

NO : Go to next CHECK .

CHECK : ***Is there poor contact in ECM connector?***

YES : Repair poor contact in ECM connector.

NO : Replace ECM.

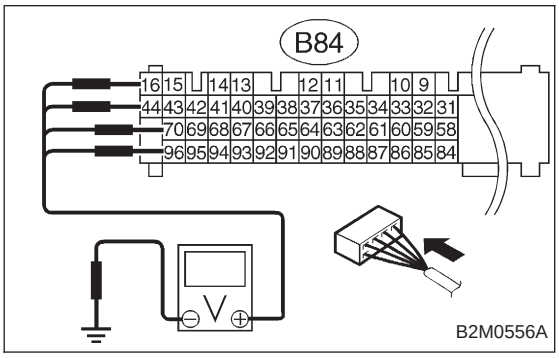

10AE2	CHECK HARNESS BETWEEN FUEL INJECTOR AND ECM CONNECTOR.

1) Turn ignition switch to OFF.
2) Disconnect connector from fuel injector on faulty cylinder.
3) Turn ignition switch to ON.
4) Measure voltage between ECM connector and chassis ground on faulty cylinders.

CHECK : ***Connector & terminal***
#1 (B84) No. 96 (+) — Chassis ground (–):
#2 (B84) No. 70 (+) — Chassis ground (–):
#3 (B84) No. 44 (+) — Chassis ground (–):
#4 (B84) No. 16 (+) — Chassis ground (–):
Is the voltage more than 10 V?

YES : Repair battery short circuit in harness between ECM and fuel injector. After repair, replace ECM.

NO : Go to next step 5).

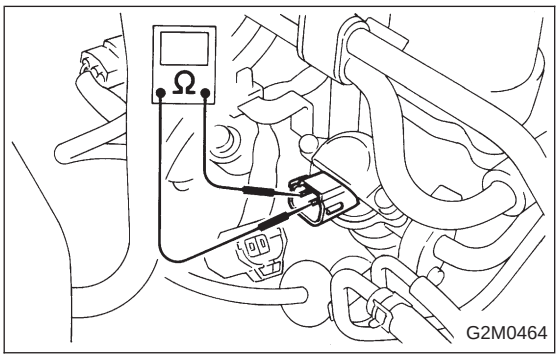

5) Turn ignition switch to OFF.
6) Measure resistance between fuel injector terminals on faulty cylinder.

CHECK : ***Terminals***
No. 1 — No. 2 :
Is the resistance less than 1 Ω?

YES : Replace faulty fuel injector and ECM.

NO : Go to next CHECK .

CHECK ***: Is there poor contact in ECM connector?***

YES : Repair poor contact in ECM connector.

NO : Replace ECM.

OBD (FB1)

P0301 <MIS_1>

OBD0277

AF: DTC P0301
— CYLINDER 1 MISFIRE DETECTED —

OBD (FB1)

P0302 <MIS_2>

OBD0278

AG: DTC P0302
— CYLINDER 2 MISFIRE DETECTED —

OBD (FB1)

P0303 <MIS_3>

OBD0279

AH: DTC P0303
— CYLINDER 3 MISFIRE DETECTED —

OBD (FB1)

P0304 <MIS_4>

OBD0280

AI: DTC P0304
— CYLINDER 4 MISFIRE DETECTED —

DTC DETECTING CONDITION:

- Two consecutive driving cycles with fault
- Immediately at fault recognition (A misfire which could damage catalyst occurs.)

TROUBLE SYMPTOM:

- Engine stalls.
- Erroneous idling
- Rough driving

WIRING DIAGRAM:

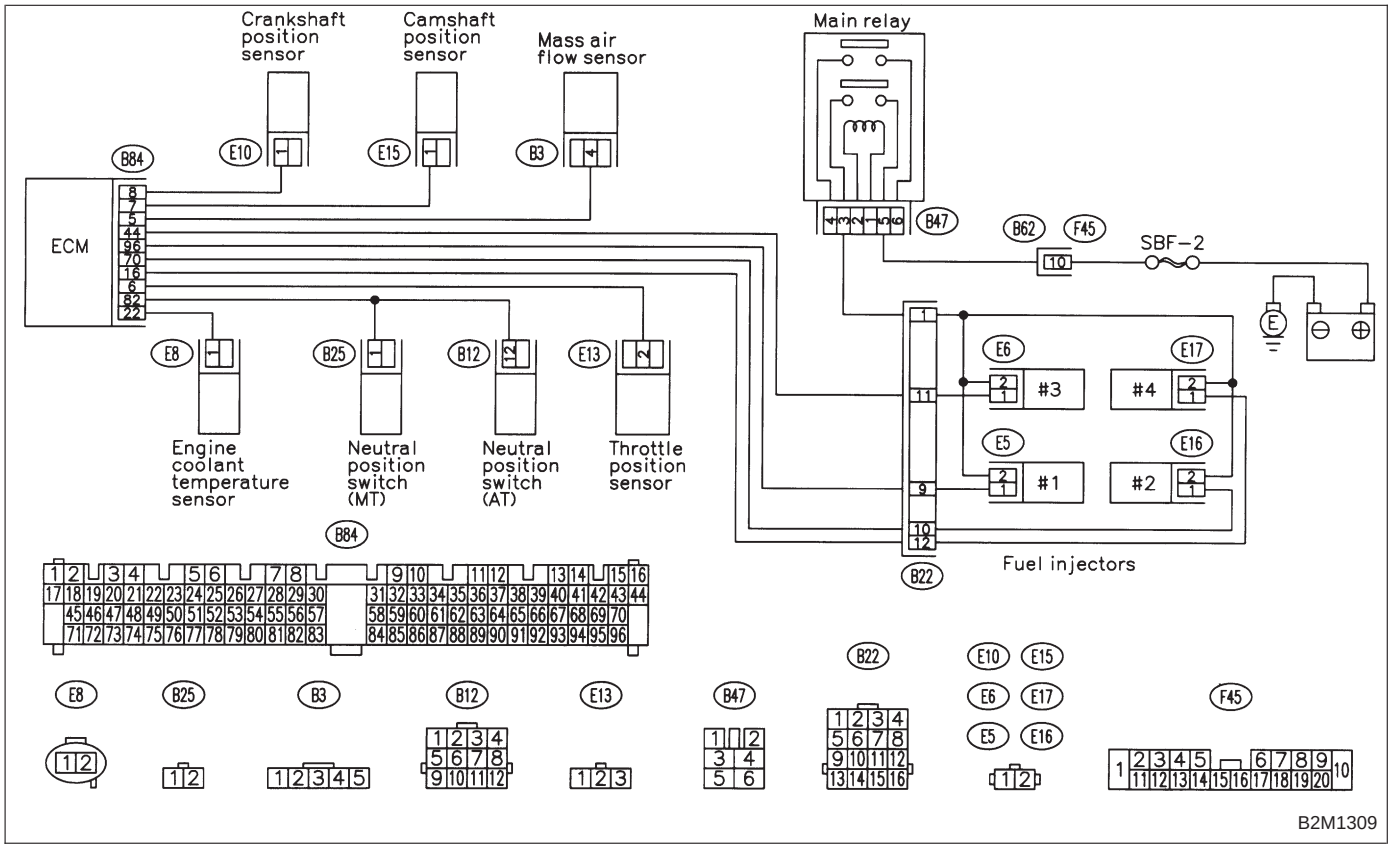

CAUTION:
After repair or replacement of faulty parts, conduct CLEAR MEMORY and INSPECTION MODES.
<Ref. to 2-7 [T3D0] and [T3E0].>

10AI1	CHECK DTC P0101, P0102, P0103, P0116, P0117, P0125, P0261, P0262, P0264, P0265, P0267, P0268, P0270 OR P0271 ON DISPLAY.

CHECK : ***Does the Subaru select monitor or OBD-II general scan tool indicate DTC P0101, P0102, P0103, P0116, P0117, P0125, P0261, P0262, P0264, P0265, P0267, P0268, P0270 or P0271?***

YES : Inspect DTC P0101, P0102, P0103, P0116, P0117, P0125, P0261, P0262, P0264, P0265, P0267, P0268, P0270 or P0271 using “10. Diagnostics Chart with Trouble Code”. <Ref. to 2-7 [T10A0].>

NOTE:
In this case, it is not necessary to inspect DTC P0301, P0302, P0303 and P0304.

NO : Go to step **10AI2**.

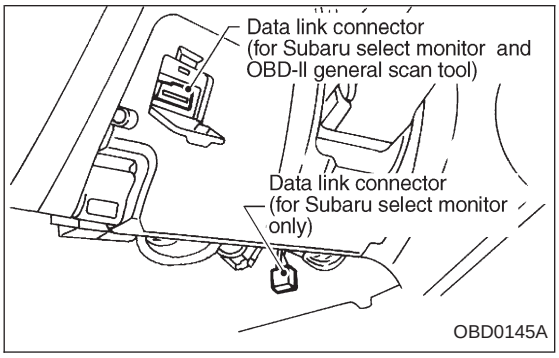

10AI2	CONNECT SUBARU SELECT MONITOR AND READ DATA.

1) Turn ignition switch to OFF.
2) Connect Subaru Select Monitor to the data link connector.
3) Turn ignition switch to ON and turn Subaru Select Monitor switch to ON.

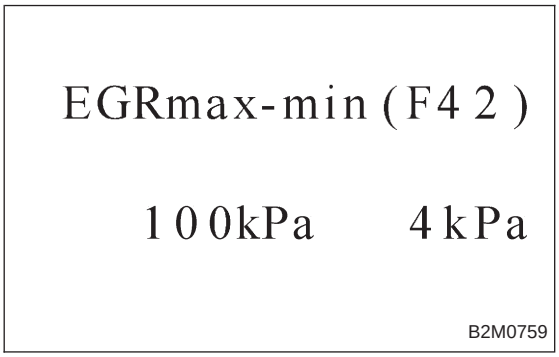

4) Read data on Subaru Select Monitor.
Designate mode use function key.

Function mode: F42

NOTE:
F42: Maximum and minimum EGR system pressure value are indicated at the same time.
5) Print out the displayed data on paper.

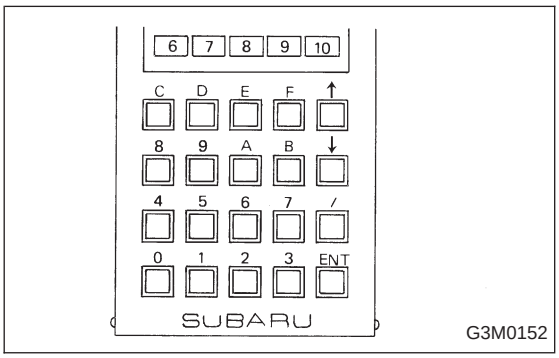

6) Clear memory on Subaru Select Monitor.
Designate mode use function key.
Press [F], [C], [0], [ENT] in that order.

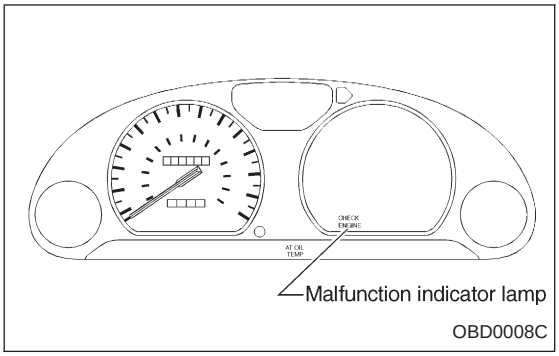

7) Start engine, and drive the vehicle more than 10 minutes.

CHECK ***: Is the MIL coming on or blinking?***

YES : Go to step **10AI3**.

NO : Go to next CHECK .

CHECK ***: Has the vehicle been run empty of fuel?***

YES : Finish diagnostics operation, if the engine has no abnormality.

NO : Go to next CHECK .

CHECK ***: Was the cause of misfire diagnosed when the engine is running?***

NOTE:
Ex. Remove spark plug cord, etc.

YES : Finish diagnostics operation, if the engine has no abnormality.

NO : Repair connector.

NOTE:
In this case, repair the following:
- Poor contact in ignitor connector
- Poor contact in ignition coil connector
- Poor contact in fuel injector connector on faulty cylinders
- Poor contact in ECM connector
- Poor contact in coupling connector (B22)

10AI3	CHECK AIR INTAKE SYSTEM.

CHECK ***: Is there a fault in air intake system?***

NOTE:
Check the following items:
- Are there air leaks or air suction caused by loose or dislocated nuts and bolts?
- Are there cracks or any disconnection of hoses?

YES : Repair air intake system.

NO : Go to step **10AI4**.

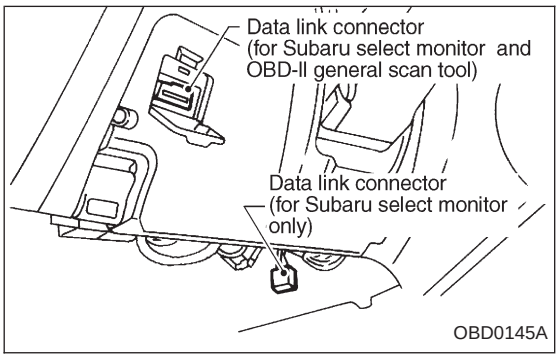

10AI4	CHECK MISFIRE SYMPTOM.

1) Turn ignition switch to OFF.
2) Connect the Subaru Select Monitor or the OBD-II general scan tool to data link connector.
3) Turn ignition switch to ON, and turn Subaru Select Monitor or OBD-II general scan tool switch to ON.

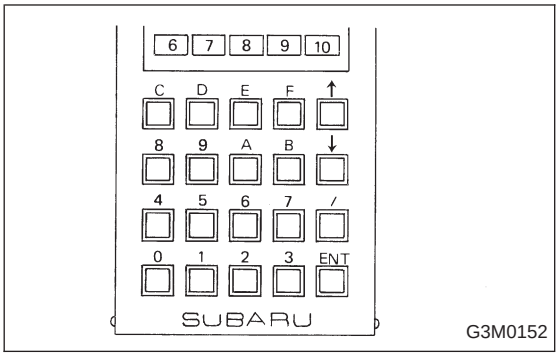

4) Read diagnostic trouble code (DTC).

● Subaru Select Monitor

Designate mode use function key.

Function mode: FB1

● OBD-II general scan tool

For detailed operation procedures, refer to the OBD-II General Scan Tool Operation Manual.

NOTE:

Perform diagnosis according to the items listed below.

CHECK ***: Does the Subaru select monitor or OBD-II general scan tool indicate only one DTC?***

YES : Go to step **10AI5**.

NO : Go to next CHECK .

CHECK ***: Does the Subaru select monitor or OBD-II general scan tool indicate DTC P0301 and P0302?***

YES : Go to step **10AI6**.

NO : Go to next CHECK .

CHECK ***: Does the Subaru select monitor or OBD-II general scan tool indicate DTC P0303 and P0304?***

YES : Go to step **10AI7**.

NO : Go to next CHECK .

CHECK ***: Does the Subaru select monitor or OBD-II general scan tool indicate DTC P0301 and P0303?***

YES : Go to step **10AI8**.

NO : Go to next CHECK .

CHECK ***: Does the Subaru select monitor or OBD-II general scan tool indicate DTC P0302 and P0304?***

YES : Go to step **10AI9**.

NO : Go to step **10AI10**.

10AI5	ONLY ONE CYLINDER

CHECK : ***Is there a fault in that cylinder?***

NOTE:
Check the following items.
- Spark plug
- Spark plug cord
- Fuel injector
- Compression ratio

YES : Repair or replace faulty parts.

NO : Go to step **10AI11**.

10AI6	GROUP OF #1 AND #2 CYLINDERS

CHECK : ***Are there faults in #1 and #2 cylinders?***

NOTE:
- Check the following items.
  - Spark plugs
  - Fuel injectors
  - Ignition coil
- If no abnormal is discovered, check for “D: IGNITION CONTROL SYSTEM” of #1 and #2 cylinders side. <Ref. to 2-7 [T8D0].>

YES : Repair or replace faulty parts.

NO : Go to step **10AI11**.

10AI7	GROUP OF #3 AND #4 CYLINDERS

CHECK : ***Are there faults in #3 and #4 cylinders?***

NOTE:
- Check the following items.
  - Spark plugs
  - Fuel injectors
  - Ignition coil
- If no abnormal is discovered, check for “D: IGNITION CONTROL SYSTEM” of #3 and #4 cylinders side. <Ref. to 2-7 [T8D0].>

YES : Repair or replace faulty parts.

NO : Go to step **10AI11**.

10AI8	GROUP OF #1 AND #3 CYLINDERS

CHECK : ***Are there faults in #1 and #3 cylinders?***

NOTE:
Check the following items.
- Spark plugs
- Fuel injectors
- Skipping timing belt teeth

YES : Repair or replace faulty parts.

NO : Go to step **10AI11**.

10AI9	GROUP OF #2 AND #4 CYLINDERS

CHECK : ***Are there faults in #2 and #4 cylinders?***

NOTE:
Check the following items.
- Spark plugs
- Fuel injectors
- Skipping timing belt teeth

YES : Repair or replace faulty parts.

NO : Go to step **10AI11**.

10AI10	THE CYLINDER AT RANDOM

CHECK : ***Is the engine idle rough?***

YES : Go to step **10AI11**.

NO : Go to DTC P0170. <Ref. to 2-7 [T10T3], [T10T4] and [T10T5].>

EGRmax-min (F42)

100kPa 4kPa

B2M0759

10AI11	CHECK EGR SYSTEM.

CHECK : ***Is the minimum EGR system pressure value (value of function mode (F42) less than 1 kPa?***

NOTE:
Use the value read in step **10X2** for function mode F42.

YES : Clean EGR valve.

CAUTION:
Do not use solvent when cleaning EGR valve assembly, as it can damage diaphragm.

NOTE:
- Remove and blow away the exhaust deposits. Make sure the valve operates smoothly and the valve seat area is completely cleaned.
- Replace EGR valve as required.

NO : Go to DTC P0170. <Ref. to 2-7 [T10T3], [T10T4] and [T10T5].>

OBD	(FB1)
P0325	<KNOCK>

OBD0283

AJ: DTC P0325 — KNOCK SENSOR CIRCUIT MALFUNCTION —

DTC DETECTING CONDITION:

- Immediately at fault recognition

TROUBLE SYMPTOM:

- Poor driving performance
- Knocking occurs.

WIRING DIAGRAM:

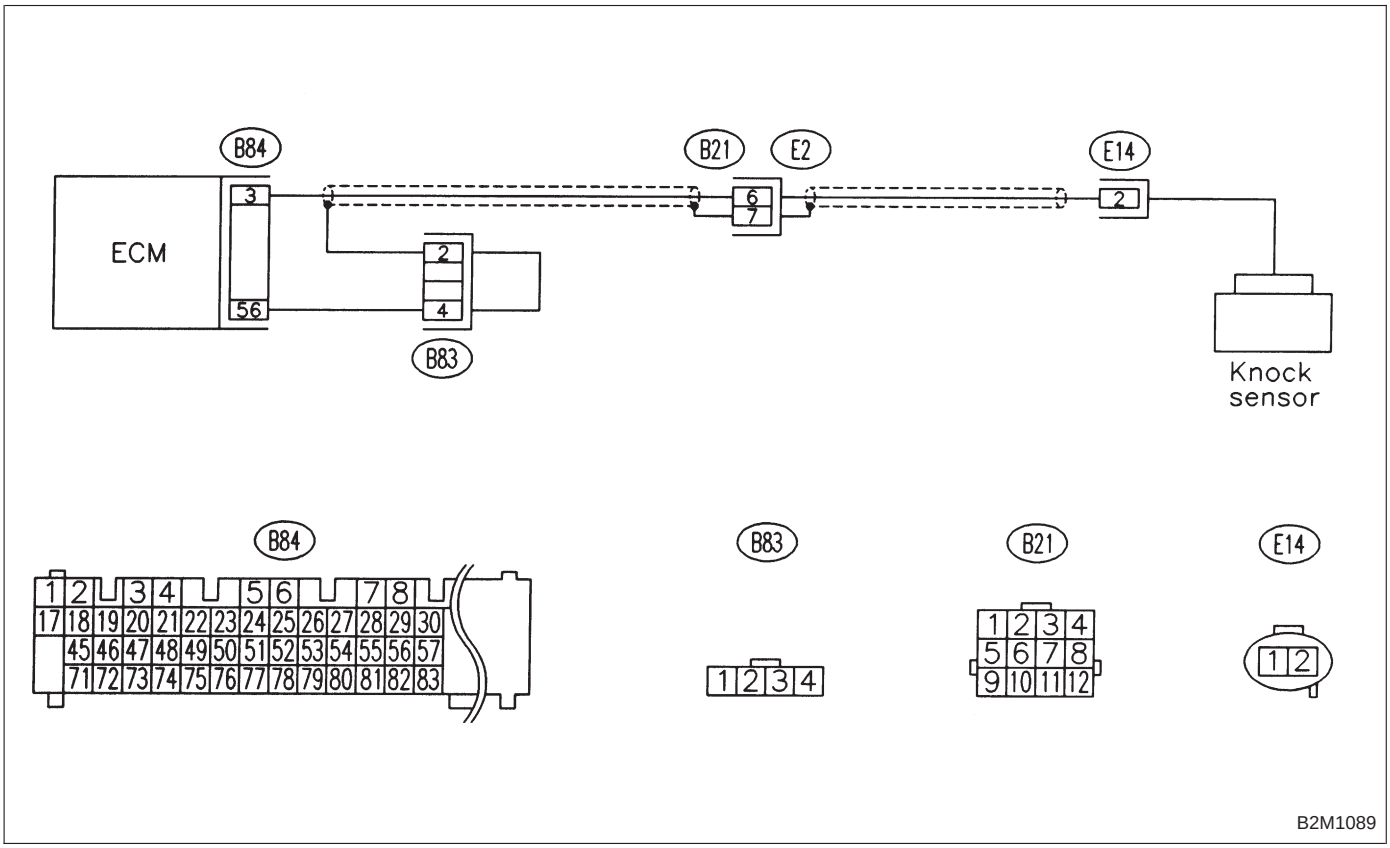

CAUTION:
After repair or replacement of faulty parts, conduct CLEAR MEMORY and INSPECTION MODES.
<Ref. to 2-7 [T3D0] and [T3E0].>

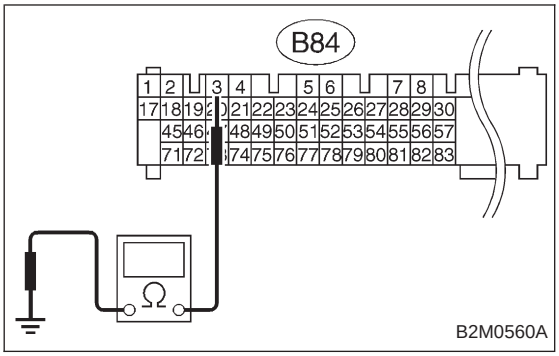

10AJ1	CHECK HARNESS BETWEEN KNOCK SENSOR AND ECM CONNECTOR.

1) Turn ignition switch to OFF.
2) Disconnect connector from ECM.
3) Measure resistance between ECM harness connector and chassis ground.

CHECK : ***Connector & terminal (B84) No. 3 — Chassis ground: Is the resistance more than 700 kΩ?***

YES : Go to step **10AJ2**.

NO : Go to next CHECK .

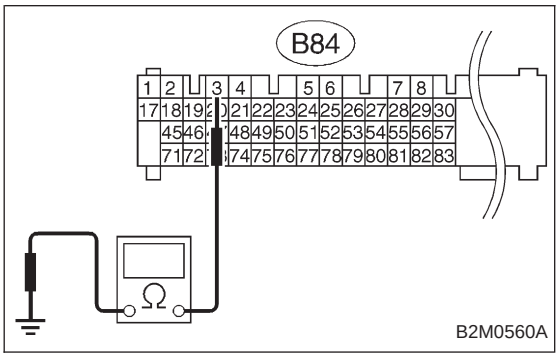

CHECK : ***Connector & terminal (B84) No. 3 — Chassis ground: Is the resistance less than 400 kΩ?***

YES : Go to step **10AJ3**.

NO : Go to step **10AJ4**.

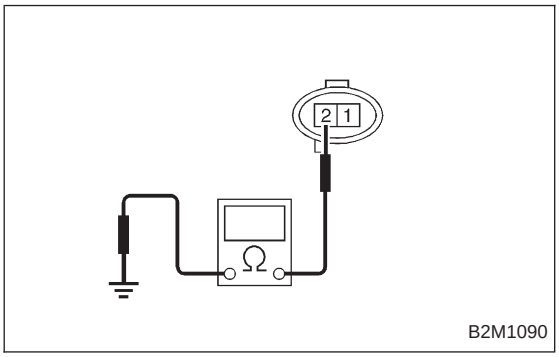

10AJ2	CHECK KNOCK SENSOR.

1) Disconnect connector from knock sensor.
2) Measure resistance between knock sensor connector terminal and engine ground.

CHECK : ***Terminal No. 2 — Engine ground: Is the resistance more than 700 kΩ?***

YES : Go to next CHECK .

NO : Repair harness and connector.

NOTE:
In this case, repair the following:
- Open circuit in harness between knock sensor and ECM connector
- Poor contact in knock sensor connector
- Poor contact in coupling connector (B21)

CHECK : ***Is the knock sensor installation bolt tightened securely?***

YES : Replace knock sensor.

NO : Tighten knock sensor installation bolt securely.

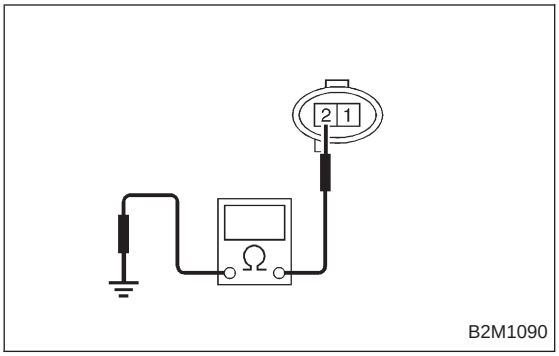

10AJ3	CHECK KNOCK SENSOR.

1) Disconnect connector from knock sensor.
2) Measure resistance between knock sensor connector terminal and engine ground.

CHECK : ***Terminal No. 2 — Engine ground: Is the resistance less than 400 kΩ?***

YES : Replace knock sensor.

NO : Repair ground short circuit in harness between knock sensor connector and ECM connector.

NOTE:
The harness between both connectors is shielded. Repair short circuit of harness together with shield.

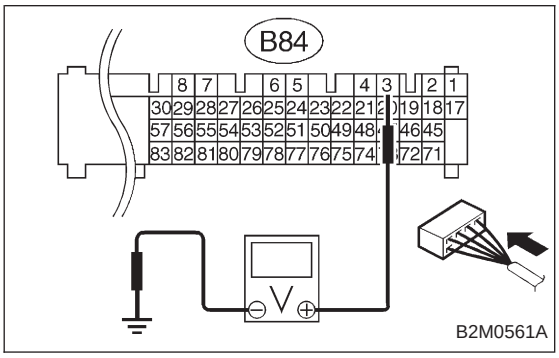

10AJ4	CHECK INPUT SIGNAL FOR ECM.

1) Connect connectors to ECM and knock sensor.
2) Turn ignition switch to ON.
3) Measure voltage between ECM and chassis ground.

CHECK : ***Connector & terminal (B84) No. 3 (+) — Chassis ground (−): Is the voltage more than 2 V?***

YES : Even if MIL lights up, the circuit has returned to a normal condition at this time. (However, the possibility of poor contact still remains.)

NOTE:
In this case, repair the following:
- Poor contact in knock sensor connector
- Poor contact in ECM connector
- Poor contact in coupling connector (B21)

NO : Repair poor contact in ECM connector.

OBD	(FB1)
P0335	<CRANK>

OBD0292

AK: DTC P0335 — CRANKSHAFT POSITION SENSOR CIRCUIT MALFUNCTION —

DTC DETECTING CONDITION:

- Immediately at fault recognition

TROUBLE SYMPTOM:

- Engine stalls.
- Failure of engine to start

WIRING DIAGRAM:

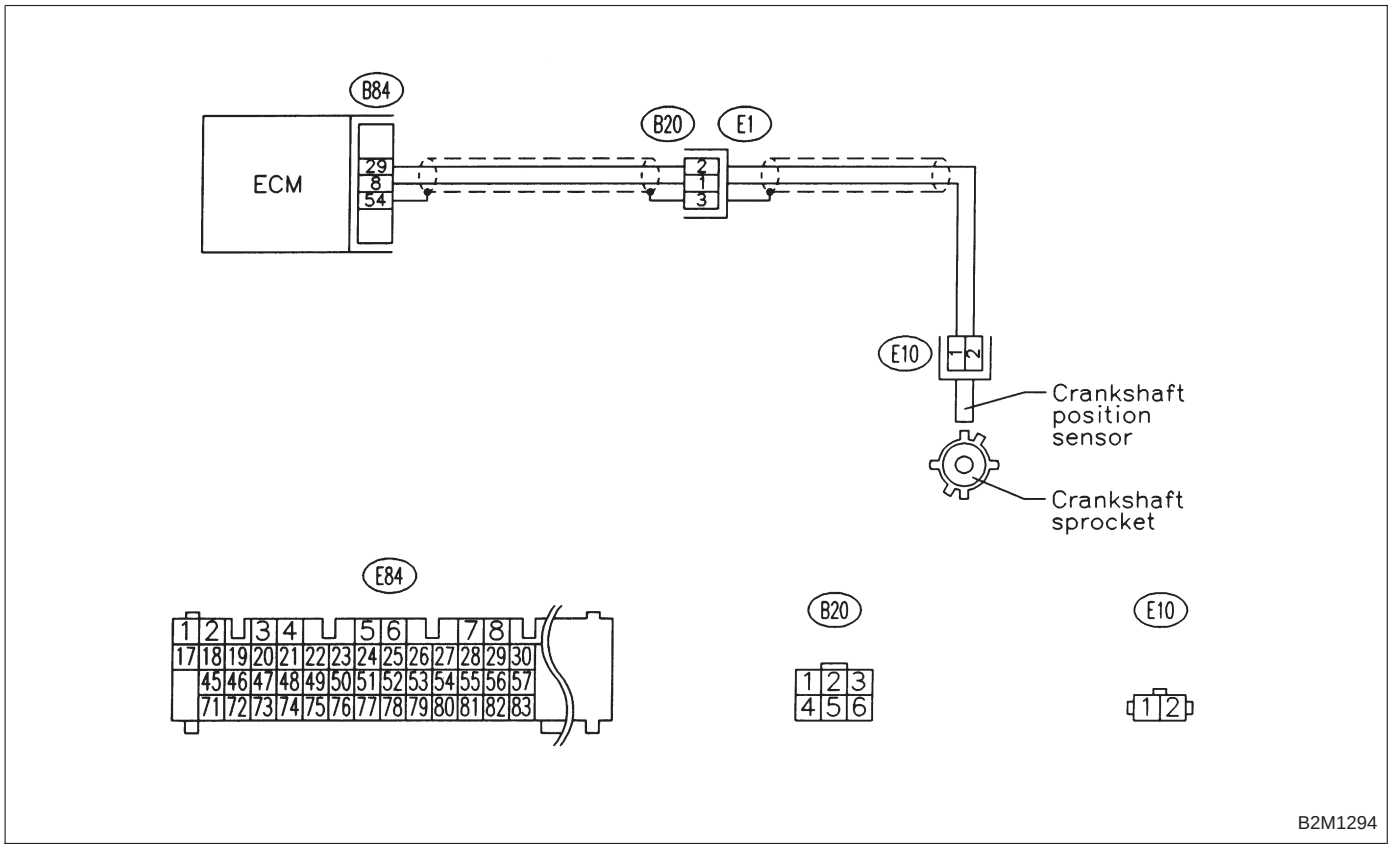

B2M1294

CAUTION:
After repair or replacement of faulty parts, conduct CLEAR MEMORY and INSPECTION MODES.
<Ref. to 2-7 [T3D0] and [T3E0].>

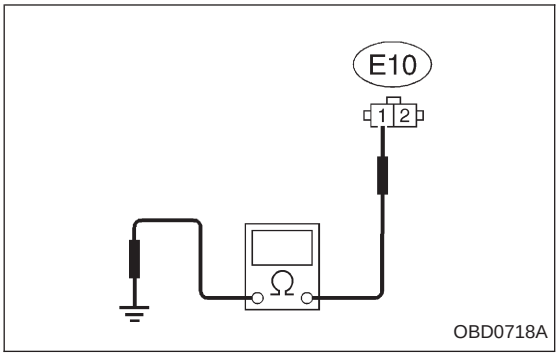

10AK1	CHECK HARNESS BETWEEN CRANKSHAFT POSITION SENSOR AND ECM CONNECTOR.

1) Turn ignition switch to OFF.
2) Disconnect connector from crankshaft position sensor.
3) Measure resistance of harness between crankshaft position sensor connector and engine ground.

CHECK : ***Connector & terminal (E10) No. 1 — Engine ground: Is the resistance more than 100 kΩ?***

YES : Repair harness and connector.

NOTE:
In this case, repair the following:
- Open circuit in harness between crankshaft position sensor and ECM connector
- Poor contact in ECM connector
- Poor contact in coupling connector (B20)

NO : Go to next CHECK .

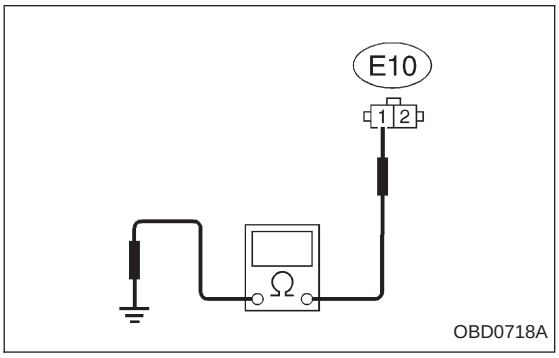

CHECK : ***Connector & terminal (E10) No. 1 — Engine ground: Is the resistance less than 10 Ω?***

YES : Repair ground short circuit in harness between crankshaft position sensor and ECM connector.

NOTE:
The harness between both connectors are shielded. Repair ground short circuit in harness together with shield.

NO : Go to next CHECK .

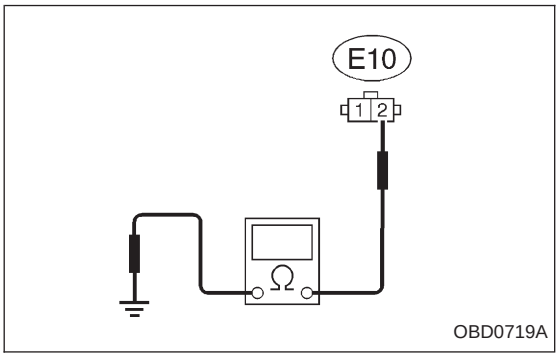

CHECK : ***Connector & terminal (E10) No. 2 — Engine ground: Is the resistance less than 5 Ω?***

YES : Go to step **10AK2**.

NO : Repair harness and connector.

NOTE:
In this case, repair the following:
- Open circuit in harness between crankshaft position sensor and ECM connector
- Poor contact in ECM connector
- Poor contact in coupling connector (B20)

10AK2	CHECK CRANKSHAFT POSITION SENSOR.

CHECK : ***Is the crankshaft position sensor installation bolt tightened securely?***

YES : Go to next step 1).

NO : Tighten crankshaft position sensor installation bolt securely.

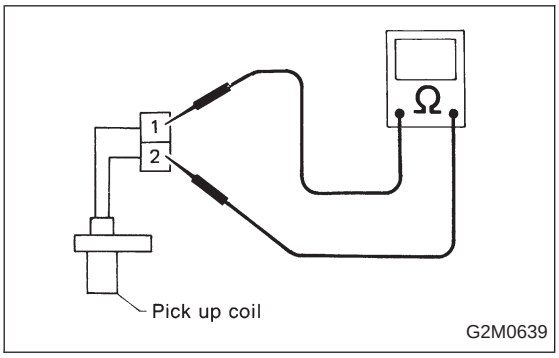

1) Remove crankshaft position sensor.
2) Measure resistance between connector terminals of crankshaft position sensor.

CHECK : ***Terminals***
No. 1 — No. 2:
Is the resistance between 1 and 4 kΩ?

YES : Repair poor contact in crankshaft position sensor connector.

NO : Replace crankshaft position sensor.

OBD (FB1)

P0336 <CRANK_R>

B2M1091

AL: DTC P0336 — CRANKSHAFT POSITION SENSOR CIRCUIT RANGE/PERFORMANCE PROBLEM —

DTC DETECTING CONDITION:

- Immediately at fault recognition

TROUBLE SYMPTOM:

- Engine stalls.
- Failure of engine to start

WIRING DIAGRAM:

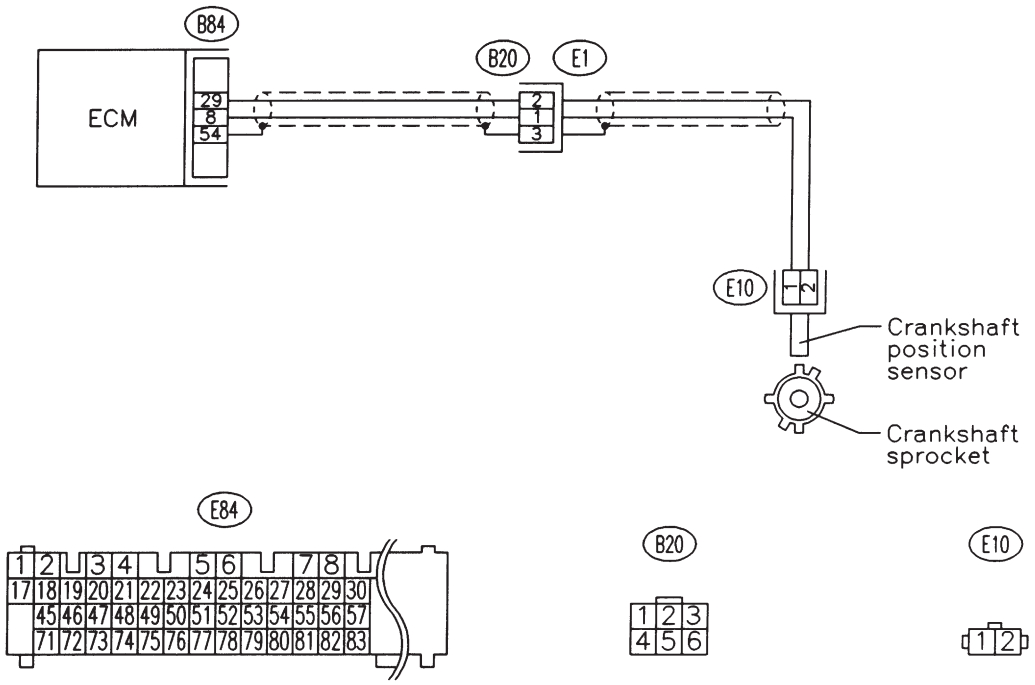

B2M1294

CAUTION:
After repair or replacement of faulty parts, conduct CLEAR MEMORY and INSPECTION MODES.
<Ref. to 2-7 [T3D0] and [T3E0].>

10AL1	CHECK DTC P0335 ON DISPLAY.

CHECK : ***Does the Subaru select monitor or OBD-II general scan tool indicate DTC P0335?***

YES : Inspect DTC P0335 using “10. Diagnostics Chart with Trouble Code”. <Ref. to 2-7 [T10A0].>

NO : Replace crankshaft position sensor.

OBD	(FB1)
P0340	<CAM>

OBD0304

AM: DTC P0340 — CAMSHAFT POSITION SENSOR CIRCUIT MALFUNCTION —

DTC DETECTING CONDITION:

- Immediately at fault recognition

TROUBLE SYMPTOM:

- Engine stalls.
- Failure of engine to start

WIRING DIAGRAM:

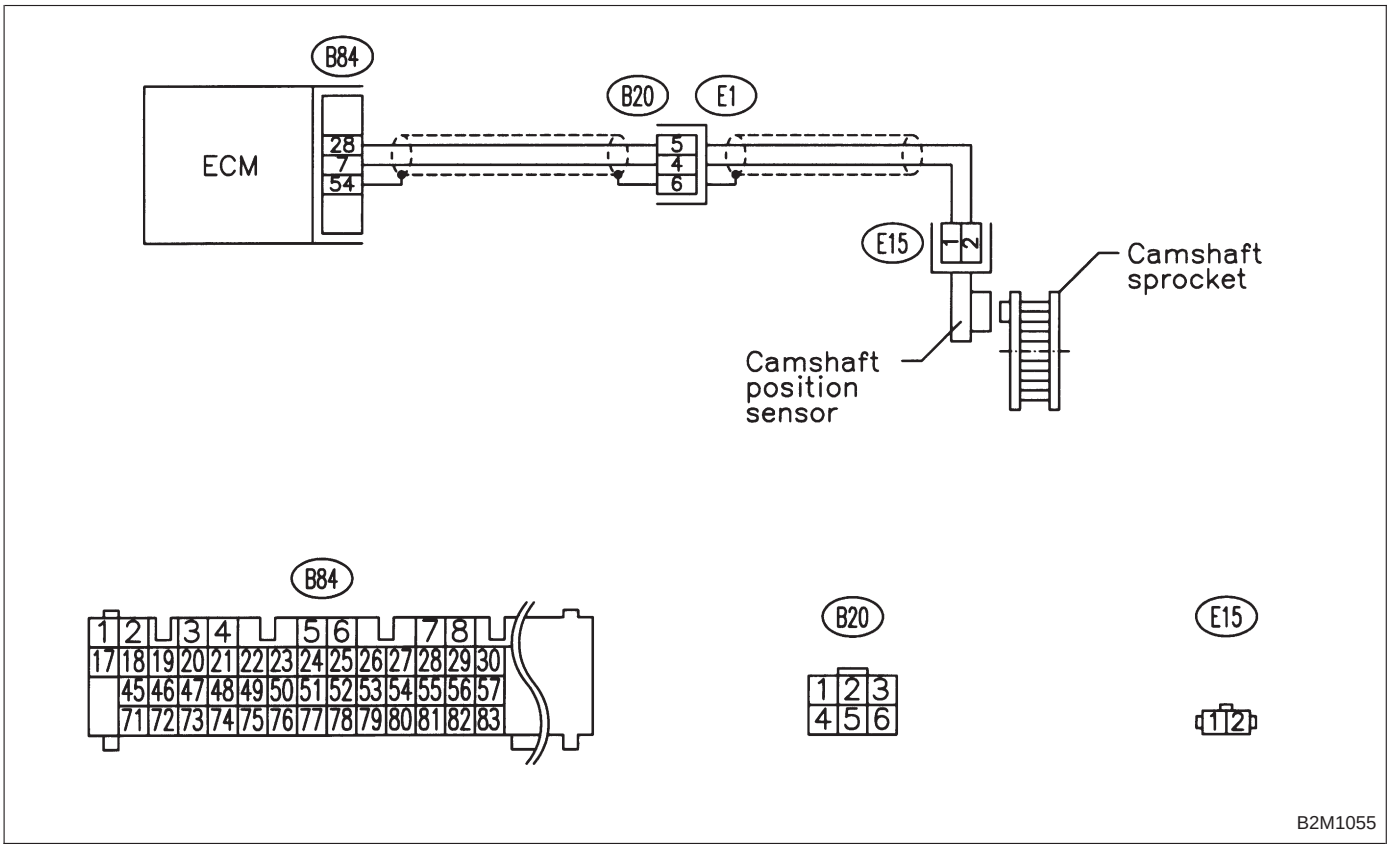

CAUTION:
After repair or replacement of faulty parts, conduct CLEAR MEMORY and INSPECTION MODES.
<Ref. to 2-7 [T3D0] and [T3E0].>

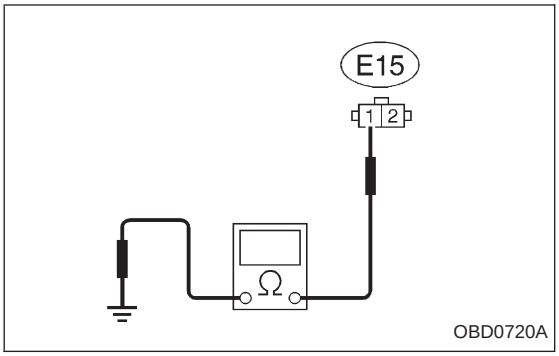

10AM1	CHECK HARNESS BETWEEN CAMSHAFT POSITION SENSOR AND ECM CONNECTOR.

1) Turn ignition switch to OFF.
2) Disconnect connector from camshaft position sensor.
3) Measure resistance of harness between camshaft position sensor connector and engine ground.

CHECK : ***Connector & terminal (E15) No. 1 — Engine ground: Is the resistance more than 100 kΩ?***

YES : Repair harness and connector.

NOTE:
In this case, repair the following:
- Open circuit in harness between camshaft position sensor and ECM connector
- Poor contact in ECM connector
- Poor contact in coupling connector (B20)

NO : Go to next CHECK .

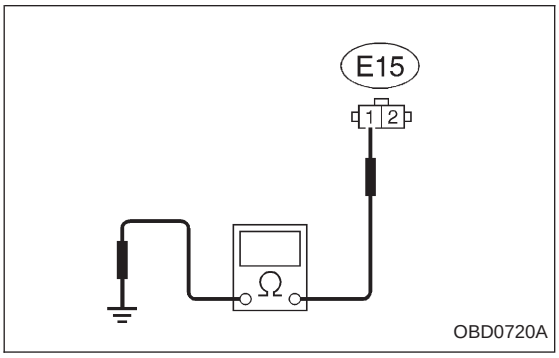

CHECK : ***Connector & terminal (E15) No. 1 — Engine ground: Is the resistance less than 10 Ω?***

YES : Repair ground short circuit in harness between camshaft position sensor connector and ECM connector.

NOTE:
The harness between both connectors are shielded. Repair ground short circuit in harness together with shield.

NO : Go to next CHECK .

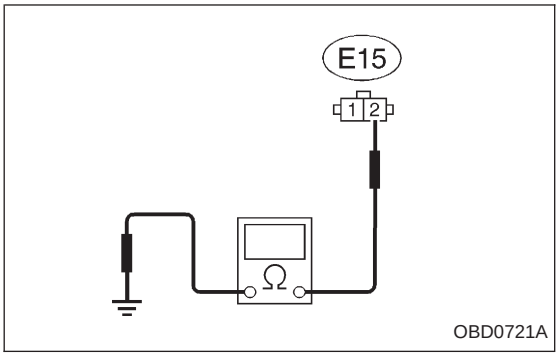

CHECK : ***Connector & terminal (E15) No. 2 — Engine ground: Is the resistance less than 5 Ω?***

YES : Go to step **10AM2**.

NO : Repair harness and connector.

NOTE:
In this case, repair the following:
- Open circuit in harness between camshaft position sensor and ECM connector
- Poor contact in ECM connector
- Poor contact in coupling connector (B20)

10AM2	CHECK CAMSHAFT POSITION SENSOR.

CHECK : ***Is the camshaft position sensor installation bolt tightened securely?***

YES : Go to next step 1).

NO : Tighten camshaft position sensor installation bolt securely.

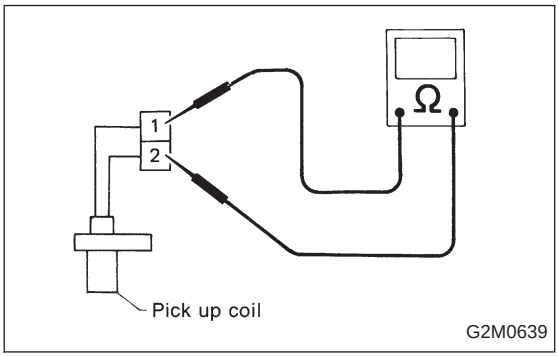

1) Remove camshaft position sensor.
2) Measure resistance between connector terminals of camshaft position sensor.

CHECK : ***Terminals No. 1 — No. 2: Is the resistance between 1 and 4 kΩ?***

YES : Repair poor contact in camshaft position sensor connector.

NO : Replace camshaft position sensor.

OBD (FB1)

P0341 <CAM_R>

B2M1092

AN: DTC P0341 — CAMSHAFT POSITION SENSOR CIRCUIT RANGE/PERFORMANCE PROBLEM —

DTC DETECTING CONDITION:

- Immediately at fault recognition

TROUBLE SYMPTOM:

- Engine stalls.
- Failure of engine to start

WIRING DIAGRAM:

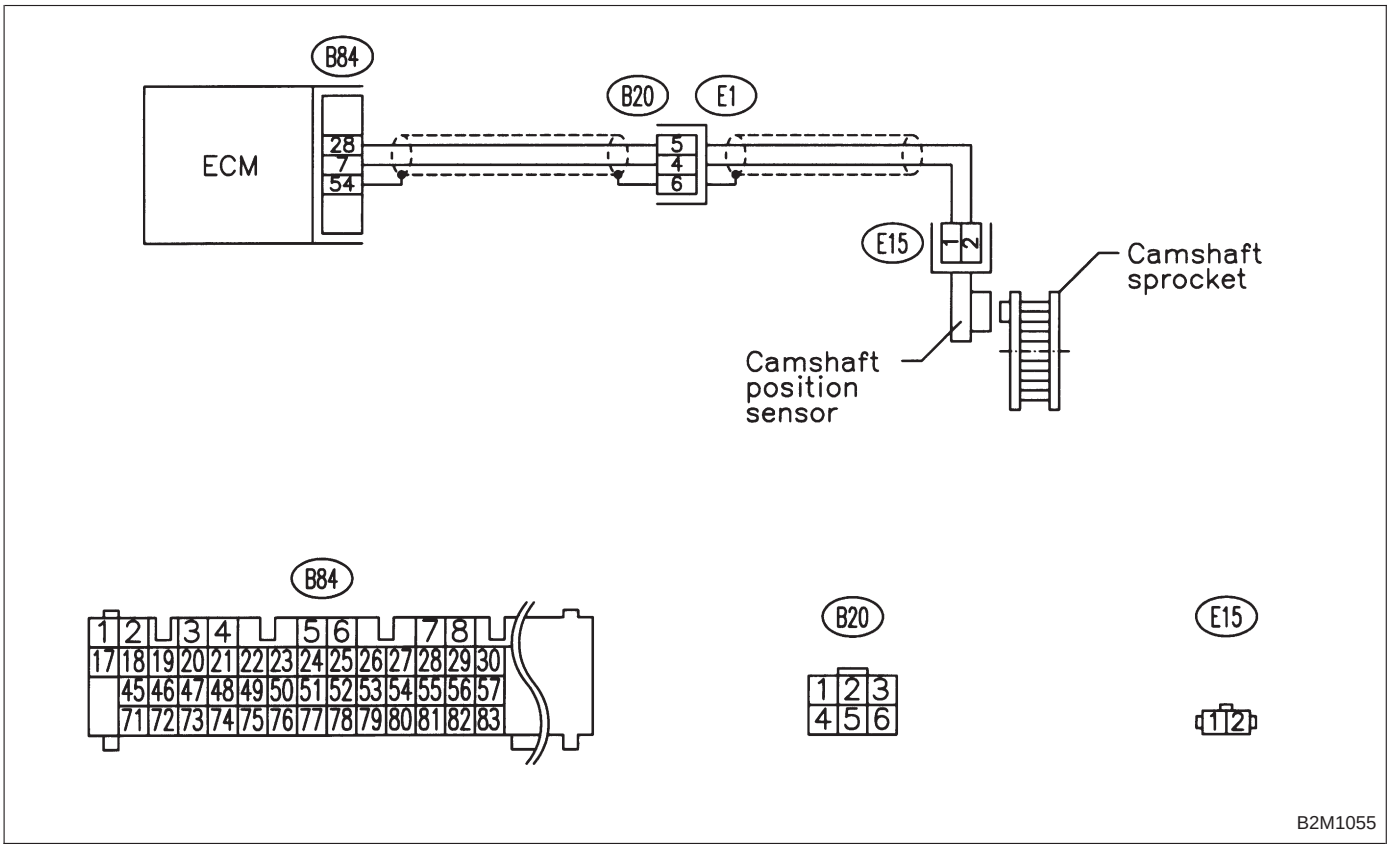

B2M1055

CAUTION:
After repair or replacement of faulty parts, conduct CLEAR MEMORY and INSPECTION MODES.
<Ref. to 2-7 [T3D0] and [T3E0].>

10AN1	CHECK DTC P0340 ON DISPLAY.

CHECK : ***Does the Subaru select monitor or OBD-II general scan tool indicate DTC P0340?***

YES : Inspect DTC P0340 using “10. Diagnostics Chart with Trouble Code”. <Ref. to 2-7 [T10A0].>

NO : Replace camshaft position sensor.

OBD	(FB1)
P0400	<EGR>

OBD0315

AO: DTC P0400 — EXHAUST GAS RECIRCULATION FLOW MALFUNCTION —

DTC DETECTING CONDITION:

- Two consecutive driving cycles with fault

TROUBLE SYMPTOM:

- Poor driving performance on low engine speed

WIRING DIAGRAM:

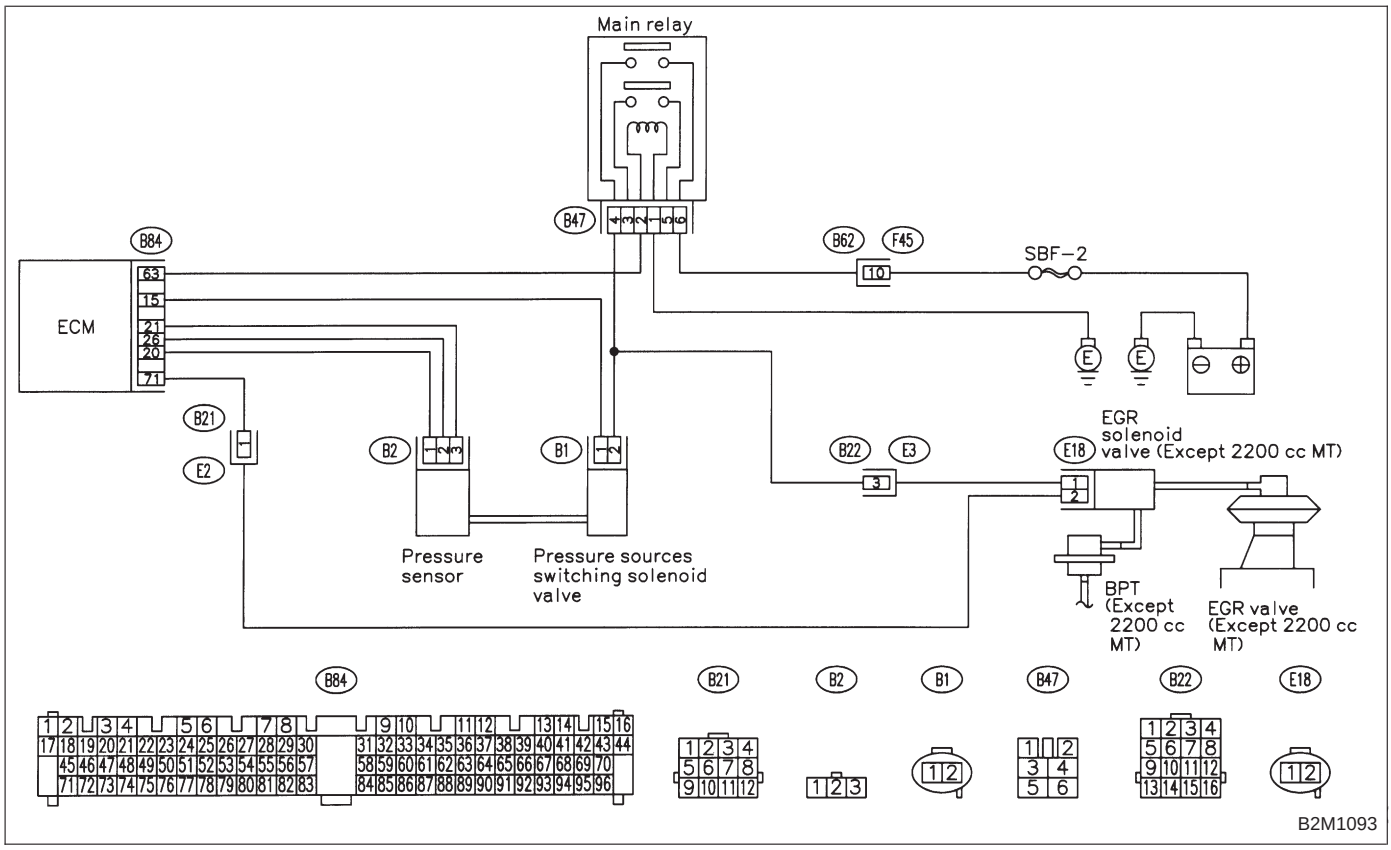

B2M1093

CAUTION:

Before confirmation of actual driving pattern, conduct CLEAR MEMORY and INSPECTION MODES.
<Ref. to 2-7 [T3D0] and [T3E0].>

10AO1	CHECK ENGINE/TRANSMISSION TYPE.

CHECK : ***Is engine/transmission type 2200 cc/MT?***

YES : Check AT/MT identification circuit. <Ref. to 2-7 [T10DD0].>

NO : Go to step **10AO2**.

10AO2	CHECK DTC P0106, P0107, P0108, P0403, P1102, P1122 OR P1421 ON DISPLAY.

CHECK : ***Does the Subaru select monitor or OBD-II general scan tool indicate DTC P0106, P0107, P0108, P0403, P1102, P1122 or P1421?***

YES : ● Inspect DTC P0106, P0107, P0108, P0403, P1102, P1122 or P1421 using “10. Diagnostics Chart with Trouble Code”. <Ref. to 2-7 [T10A0].>
● Manually check that EGR valve diaphragm is not stuck.

WARNING:
Be careful when checking EGR valve, since it may be extremely hot.

NOTE:
In this case, it is not necessary to inspect DTC P0400.

After checking the above item, go to **CONFIRMATION OF ACTUAL DRIVING PATTERN.**

NO : Go to step **10AO3**.

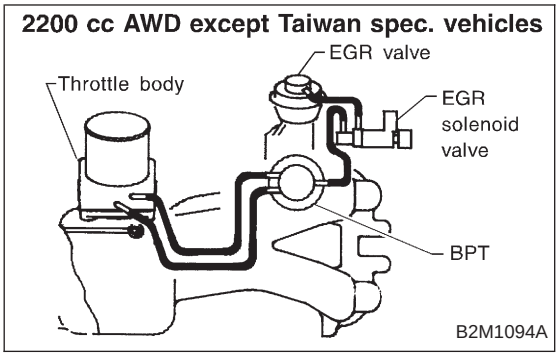

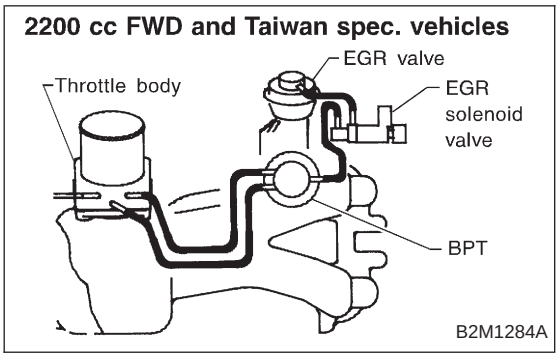

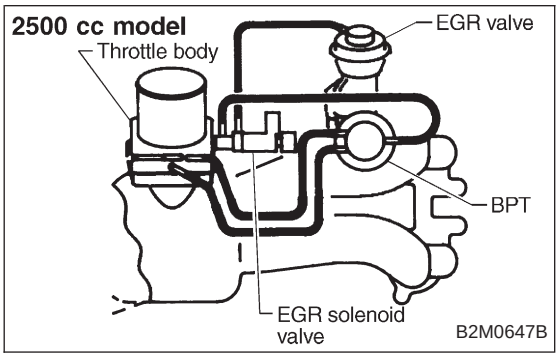

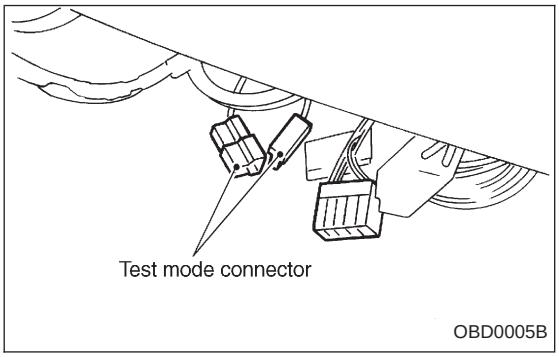

10AO3	CHECK VACUUM LINE.

CHECK : ***Is there a fault in vacuum line?***

NOTE:
Check the following items.
- Disconnection, leakage and clogging of the two vacuum hoses and pipes between throttle body and BPT
- Disconnection, leakage and clogging of the vacuum hose and pipe between EGR solenoid valve and BPT
- Disconnection, leakage and clogging of the vacuum hose between EGR solenoid valve and EGR valve
- Disconnection, leakage and clogging of BPT pressure transmitting hose

YES : Repair or replace hoses and pipes.
And after the checking and repairing, go to **CONFIRMATION OF ACTUAL DRIVING PATTERN**.

NO : Go to step **10AO4**.

10AO4	CHECK OPERATION OF EGR SYSTEM.

1) Turn ignition switch to OFF.
2) Connect the test mode connector.
3) Turn ignition switch to ON.

CHECK : ***Does EGR solenoid valve produce operating sound?***

NOTE:
EGR control solenoid valve operation check can also be executed using Subaru Select Monitor (Function mode: FD05). For the procedure, refer to “COMPULSORY VALVE OPERATION CHECK MODE”. <Ref. to 2-7 [T3F0].>

YES : Go to next step 4).

NO : Replace EGR solenoid valve.

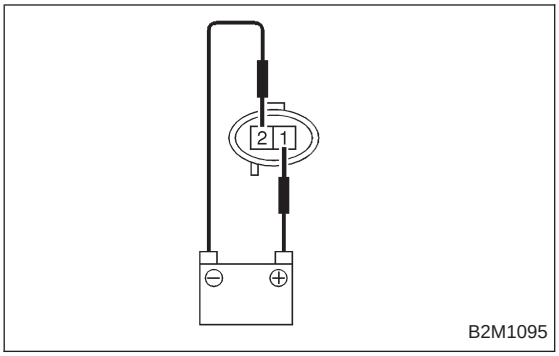

4) Turn ignition switch to OFF.
5) Disconnect connector from EGR solenoid valve.
6) Connect 12 V battery's ground ⊖ terminal to one terminal of the EGR solenoid valve. Then connect 12 V battery's ⊕ terminal to the other terminal of it.

CAUTION:
Do not use the 12 V battery installed in the vehicle, because the electrical system may be damaged.

7) Start the engine.

CHECK : ***Does EGR valve operate at a throttle valve opening of 5 to 10 degrees with visually check?***

YES : Possibly EGR valve malfunction may be due to freezing or clogging by foreign matter. At this point in time do not replace EGR valve, since it is not faulty. And after the checking, go to **CONFIRMATION OF ACTUAL DRIVING PATTERN.**

NOTE:
If malfunction is detected again in the confirmation of actual driving pattern, EGR valve is faulty. Go to next step 8).

NO : Go to next step 8).

8) Turn ignition switch to OFF.

CHECK : ***Is there clogging in the gas outlets of intake manifold or cylinder head, checking by breathing into the outlets?***

YES : Repair or replace intake manifold or cylinder head. And go to **CONFIRMATION OF ACTUAL DRIVING PATTERN.**

NO : Clean EGR valve. And go to **CONFIRMATION OF ACTUAL DRIVING PATTERN.**

CAUTION:
Do not use solvent when cleaning EGR valve assembly, as it can damage diaphragm.

NOTE:
- Remove and blow away the exhaust deposits. Make sure the valve operates smoothly and the valve seat area is completely cleaned.
- Replace EGR valve as required.

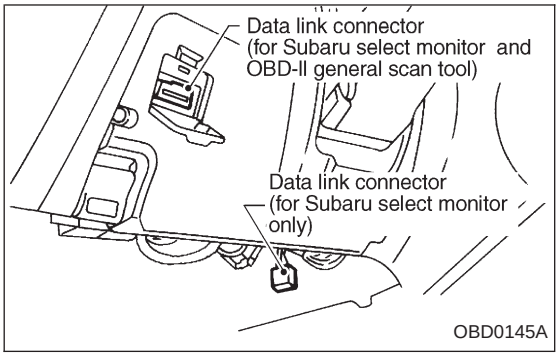

CONFIRMATION OF ACTUAL DRIVING PATTERN.

1) Conduct CLEAR MEMORY and INSPECTION MODES. <Ref. to 2-7 [T3D0] and [T3E0].>
2) Connect Subaru select monitor to its data link connector.
3) Start and warm-up the engine until the radiator fan makes one complete rotation. (All accessory switches are OFF.)
4) Turn Subaru select monitor switch to ON.

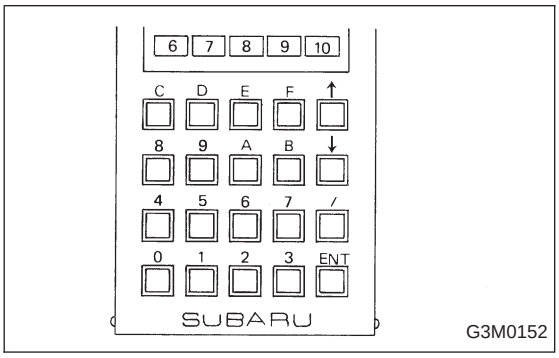

5) Designate mode using function key.

Function mode: FA4

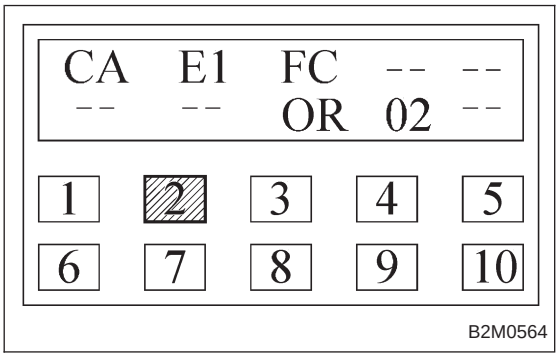

6) Drive at 88±5 km/h (55±3 MPH) until the LED No. 2 comes on.

NOTE:
Keep the throttle valve opening at the same degree, since diagnosis will be interrupted when the opening varies.
Diagnosis starts in 190 seconds after starting engine and takes 4 seconds.
Put the gear to “D” range for the diagnosis.

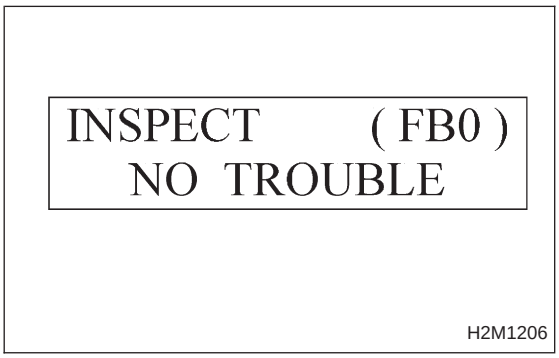

7) Designate mode using function key.

Function mode: FB0

8) Confirm the “No trouble” indication on Subaru select monitor.

OBD	(FB1)
P0403	<EGRSOL>

OBD0323

AP: DTC P0403 — EXHAUST GAS RECIRCULATION CIRCUIT LOW INPUT —

DTC DETECTING CONDITION:

- Two consecutive driving cycles with fault

TROUBLE SYMPTOM:

- Poor driving performance on low engine speed

WIRING DIAGRAM:

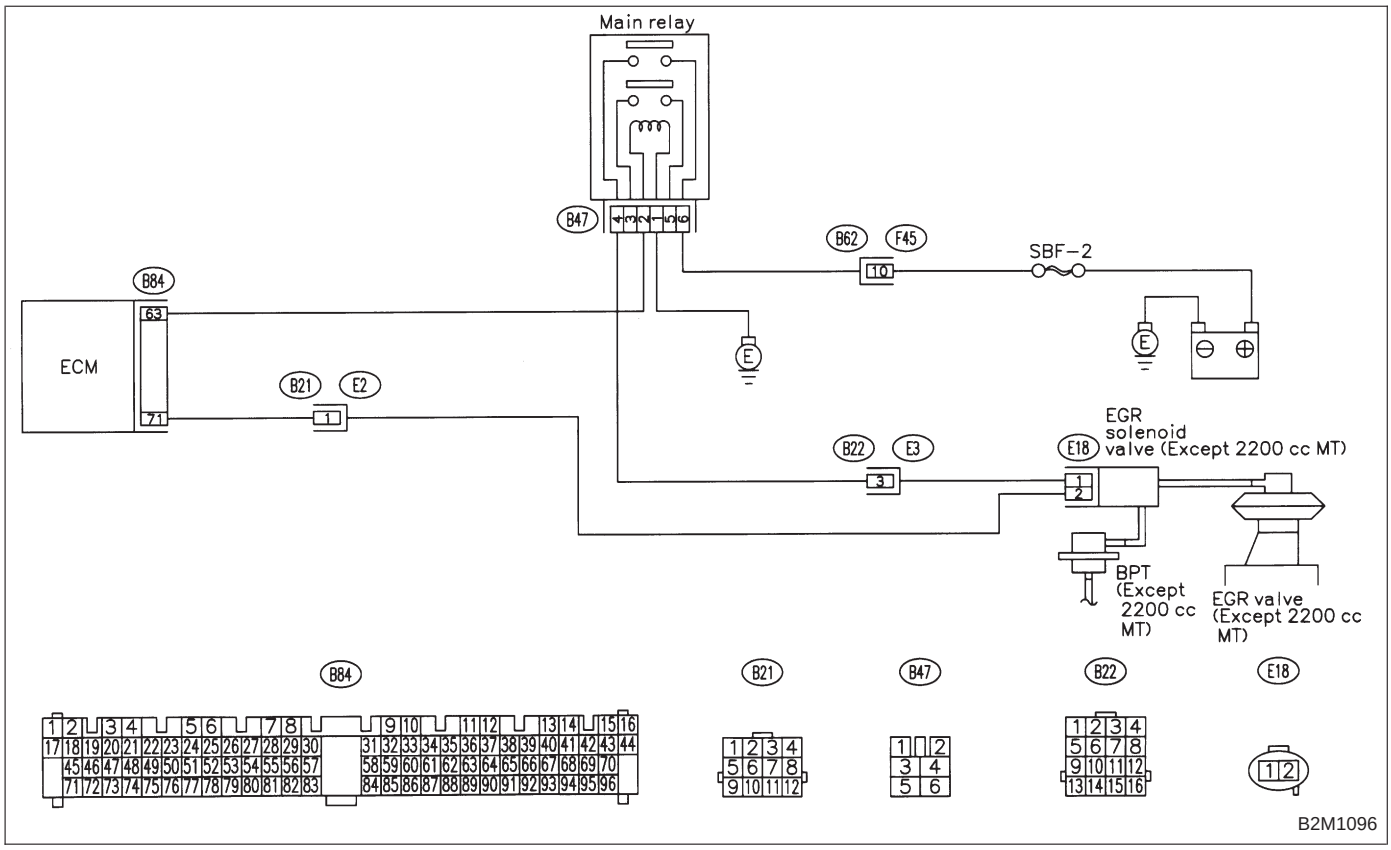

CAUTION:
After repair or replacement of faulty parts, conduct CLEAR MEMORY and INSPECTION MODES.
<Ref. to 2-7 [T3D0] and [T3E0].>

10AP1	CHECK ENGINE/TRANSMISSION TYPE.

CHECK : ***Is engine/transmission type 2200 cc/MT?***

YES : Check AT/MT identification circuit. <Ref. to 2-7 [T10DD0].>

NO : Go to step **10AP2**.

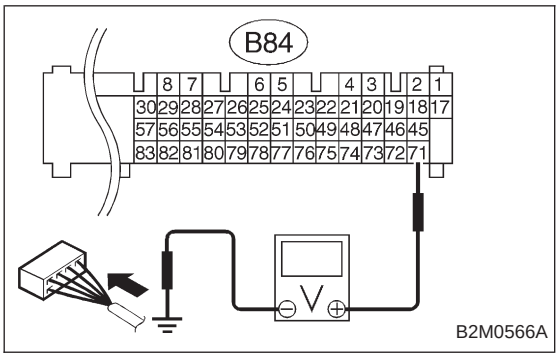

10AP2	CHECK OUTPUT SIGNAL FROM ECM.

1) Turn ignition switch to ON.
2) Measure voltage between ECM and chassis ground.

CHECK : ***Connector & terminal (B84) No. 71 (+) — Chassis ground (−): Is the voltage more than 10 V?***

YES : Go to next CHECK .

NO : Go to step **10AP3**.

CHECK : ***Is there poor contact in ECM connector?***

YES : Repair poor contact in ECM connector.

NO : Even if MIL lights up, the circuit has returned to a normal condition at this time. (However, the possibility of poor contact still remains.)

NOTE:
In this case, repair the following:
- Poor contact in EGR solenoid valve connector
- Poor contact in ECM connector
- Poor contact in coupling connector (B21)

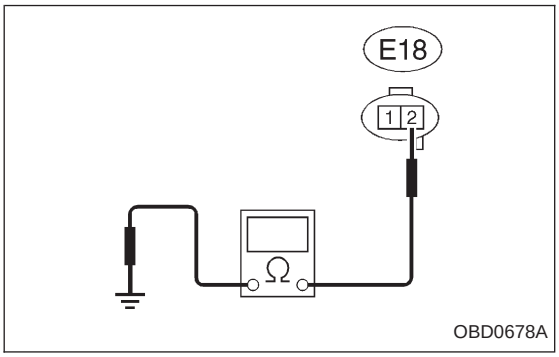

10AP3	CHECK HARNESS BETWEEN EGR SOLENOID VALVE AND ECM CONNECTOR.

1) Turn ignition switch to OFF.
2) Disconnect connectors from EGR solenoid valve and ECM.
3) Measure resistance of harness between EGR solenoid valve connector and engine ground.

CHECK : ***Connector & terminal (E18) No. 2 — Engine ground: Is the resistance less than 10 Ω?***

YES : Repair ground short circuit in harness between ECM and EGR solenoid valve connector.

NO : Go to next step 4).

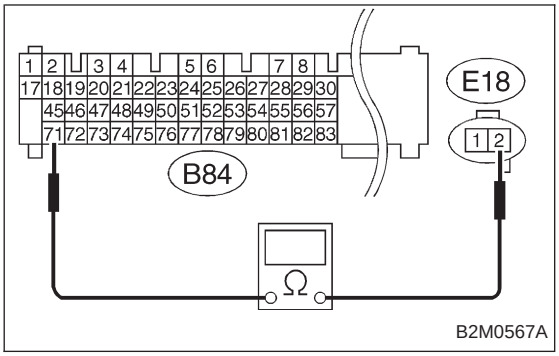

4) Measure resistance of harness between ECM and EGR solenoid valve connector.

CHECK : ***Connector & terminal (B84) No. 71 — (E18) No. 2: Is the voltage less than 1 Ω?***

YES : Go to step **10AP4**.

NO : Repair harness and connector.

NOTE:
In this case, repair the following:
- Open circuit in harness between EGR solenoid valve and ECM connector
- Poor contact in coupling connector (B21)
- Poor contact in EGR solenoid valve connector
- Poor contact in ECM connector

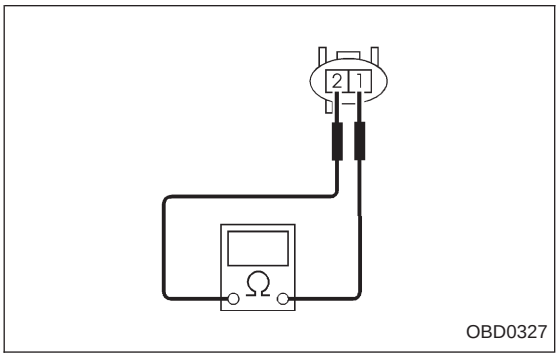

10AP4	CHECK EGR SOLENOID VALVE.

Measure resistance between EGR solenoid valve terminals.

CHECK : ***Terminals No. 1 — No. 2: Is the resistance between 10 and 100 Ω?***

YES : Go to step **10AP5**.

NO : Replace EGR solenoid valve.

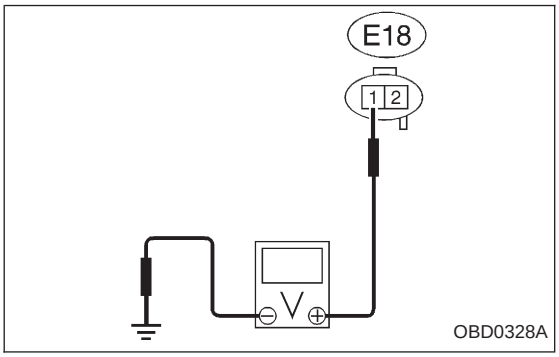

10AP5	CHECK POWER SUPPLY TO EGR SOLENOID VALVE.

1) Turn ignition switch to ON.
2) Measure voltage between EGR solenoid valve and engine ground.

CHECK : ***Connector & terminal (E18) No. 1 (+) — Engine ground (−): Is the voltage more than 10 V?***

YES : Go to next CHECK .

NO : Repair open circuit in harness between main relay and EGR solenoid valve connector.

CHECK : ***Is there poor contact in EGR solenoid valve connector?***

YES : Repair poor contact in EGR solenoid valve connector.

NO : Contact with SOA service.

NOTE:
Inspection by DTM is required, because probable cause is deterioration of multiple parts.

OBD	(FB1)
P0420	<CAT>

OBD0329

AQ: DTC P0420 — CATALYST SYSTEM EFFICIENCY BELOW THRESHOLD —

DTC DETECTING CONDITION:

- Immediately at fault recognition (2200 cc Federal spec. vehicles only)
- Two consecutive driving cycles with fault

TROUBLE SYMPTOM:

- Engine stalls.
- Idle mixture is out of specifications.

WIRING DIAGRAM:

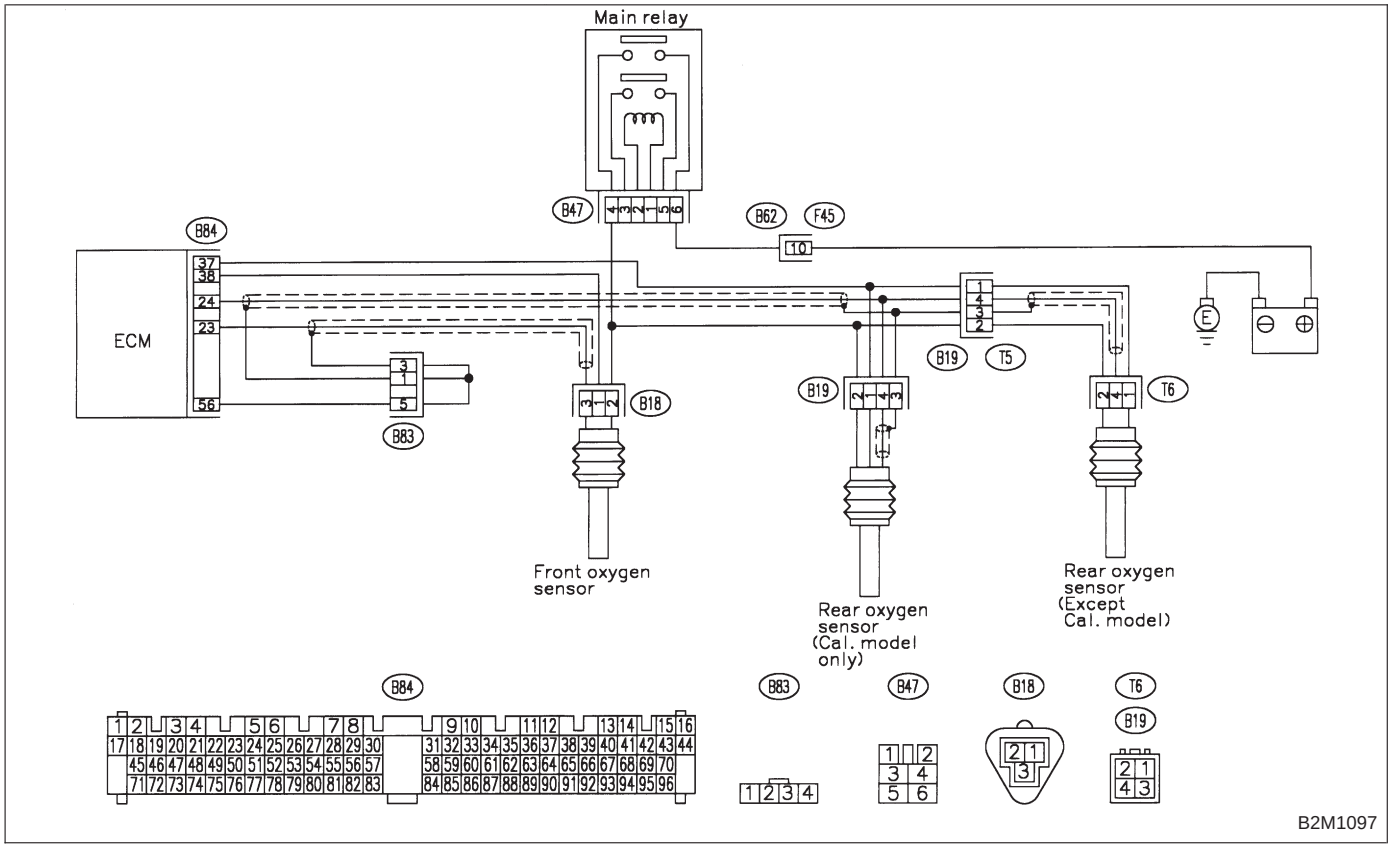

CAUTION:
After repair or replacement of faulty parts, conduct CLEAR MEMORY and INSPECTION MODES.
<Ref. to 2-7 [T3D0] and [T3E0].>

10AQ1	CHECK ANY OTHER DTC P0130, P0133, P0135, P0136, P0139 AND P0141 ON DISPLAY.

CHECK : ***Does the Subaru select monitor or OBD-II general scan tool indicate DTC P0130, P0133, P0135, P0136, P0139 and P0141?***

YES : Inspect the relevant DTC using “10. Diagnostics Chart with Trouble Code”. <Ref. to 2-7 [T10A0].>

NOTE:
In this case, it is not necessary to inspect DTC P0420.

NO : Go to step **10AQ2**.

10AQ2	CHECK EXHAUST SYSTEM.

Check for gas leaks or air suction caused by loose or dislocated nuts and bolts, and open hole at exhaust pipes.

CHECK : ***Is there a fault in exhaust system?***

NOTE:
Check the following positions.
- Between cylinder head and front exhaust pipe
- Between front exhaust pipe and front catalytic converter
- Between front catalytic converter and rear catalytic converter

YES : Repair or replace exhaust system.

NO : Go to step **10AQ3**.

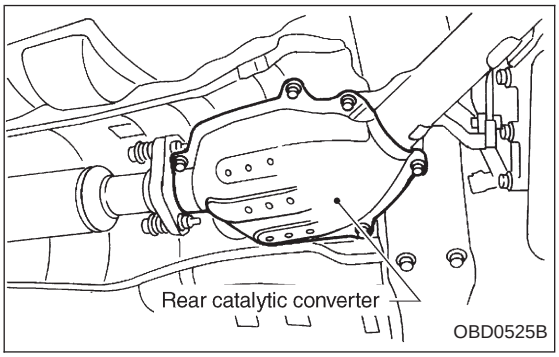

10AQ3	CHECK REAR CATALYTIC CONVERTER.

1) Separate rear catalytic converter from rear exhaust pipe.

CHECK : ***Is there damage at rear face of rear catalyst?***

YES : Replace front and rear catalytic converters.

NO : Go to next step 2).

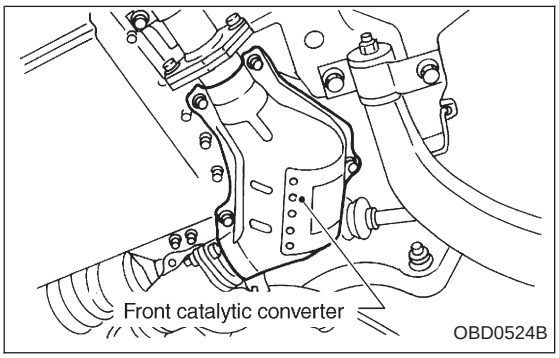

2) Remove front catalytic converter.

CHECK : ***Is there damage at rear face or front face of front catalyst?***

YES : Replace front catalytic converter.

NO : Contact with SOA service.

NOTE:
Inspection by DTM is required, because probable cause is deterioration of multiple parts.

OBD	(FB1)
P0440	<EVAP>

H2M1365

AR: DTC P0440 — EVAPORATIVE EMISSION CONTROL SYSTEM MALFUNCTION —

DTC DETECTING CONDITION:

- Two consecutive driving cycles with fault

TROUBLE SYMPTOM:

- Gasoline smell

WIRING DIAGRAM:

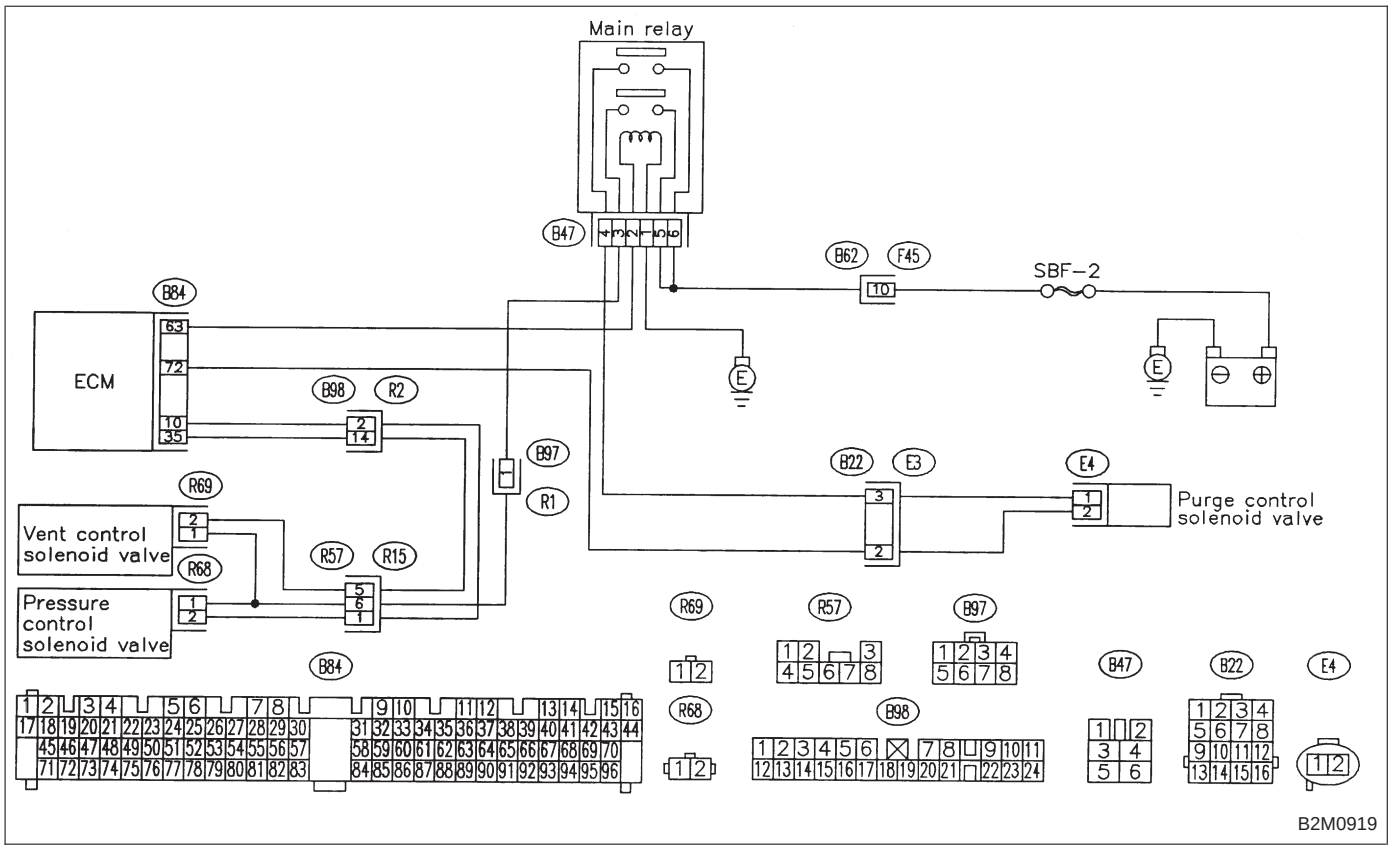

CAUTION:
After repair or replacement of faulty parts, conduct CLEAR MEMORY and INSPECTION MODES.
<Ref. to 2-7 [T3D0] and [T3E0].>

10AR1	CHECK ANY OTHER DTC (BESIDES DTC P0440) ON DISPLAY.

CHECK : ***Is there any other DTC on display?***

YES : Inspect the relevant DTC using “10. Diagnostics Chart with Trouble Code”. <Ref. to 2-7 [T10A0].>

NO : Go to step **10AR2**.

10AR2	CHECK FUEL FILLER CAP AND FUEL FILLER PIPE.

1) Turn ignition switch to OFF.
2) Open the fuel flap.

CHECK : ***Is the fuel filler cap tightened securely?***

YES : Tighten fuel filler cap securely.

NO : Go to next CHECK .

CHECK : ***Is there any damage to the seal between fuel filler cap and fuel filler pipe?***

YES : Repair or replace fuel filler cap and fuel filler pipe.

NO : Go to step **10AR3**.

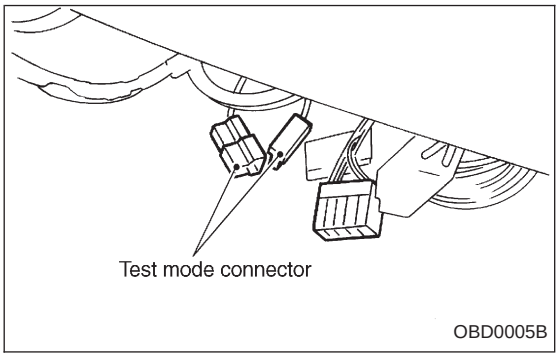

10AR3	CHECK VENT CONTROL SOLENOID VALVE.

1) Connect test mode connector.
2) Turn ignition switch to ON.

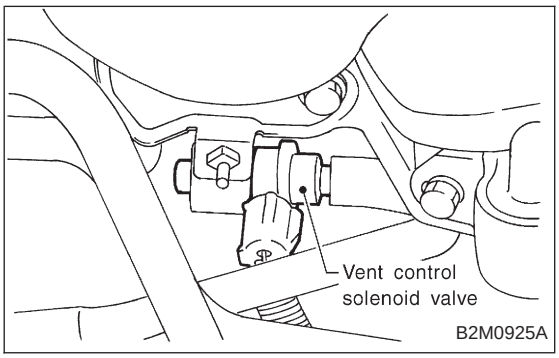

CHECK : ***Does vent control solenoid valve produce operating sound?***

NOTE:
Vent control solenoid valve operation check can also be executed using Subaru Select Monitor (Function mode: FD08). For the procedure, refer to “COMPULSORY VALVE OPERATION CHECK MODE”. <Ref. to 2-7 [T3F0].>

YES : Go to step **10AR4**.

NO : Replace vent control solenoid valve.

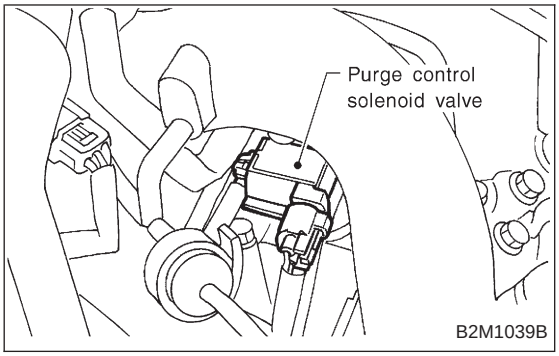

10AR4	CHECK PURGE CONTROL SOLENOID VALVE.

CHECK : ***Does purge control solenoid valve produce operating sound?***

NOTE:
Purge control solenoid valve operation check can also be executed using Subaru Select Monitor (Function mode: FD02). For the procedure, refer to “COMPULSORY VALVE OPERATION CHECK MODE”. <Ref. to 2-7 [T3F0].>

YES : Go to step **10AR5**.

NO : Replace purge control solenoid valve.

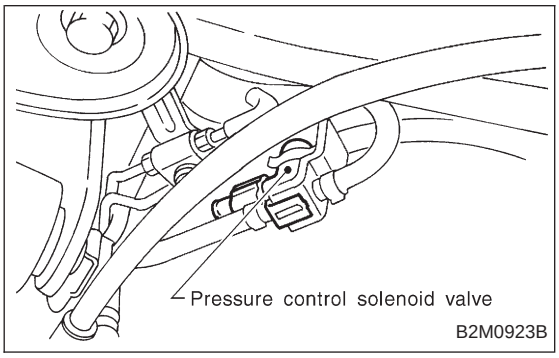

10AR5	CHECK PRESSURE CONTROL SOLENOID VALVE.

CHECK : ***Does pressure control solenoid valve produce operating sound?***

NOTE:
Pressure control solenoid valve operation check can also be executed using Subaru Select Monitor (Function mode: FD07). For the procedure, refer to “COMPULSORY VALVE OPERATION CHECK MODE”. <Ref. to 2-7 [T3F0].>

YES : Go to step **10AR6**.

NO : Replace pressure control solenoid valve.

10AR6	CHECK EVAPORATIVE EMISSION CONTROL SYSTEM LINE.

Turn ignition switch to OFF.

CHECK ***: Does fuel leak in fuel line?***

YES : Repair or replace fuel line.

NO : Go to next CHECK .

CHECK ***: Is there any damage at canister?***

YES : Repair or replace canister.

NO : Go to next CHECK .

CHECK ***: Is there any damage at fuel tank?***

YES : Repair or replace fuel tank.

NO : Go to next CHECK .

CHECK ***: Are there holes, cracks, clogging or disconnections of hoses or pipes in evaporative emission control system?***

YES : Repair or replace hoses or pipes.

NO : Contact with SOA service.

NOTE:
Inspection by DTM is required, because probable cause is deterioration of multiple parts.

OBD	(FB1)
P0441	<CPC_F>

OBD0331

AS: DTC P0441 — EVAPORATIVE EMISSION CONTROL SYSTEM INCORRECT PURGE FLOW —

DTC DETECTING CONDITION:

- Two consecutive driving cycles with fault

WIRING DIAGRAM:

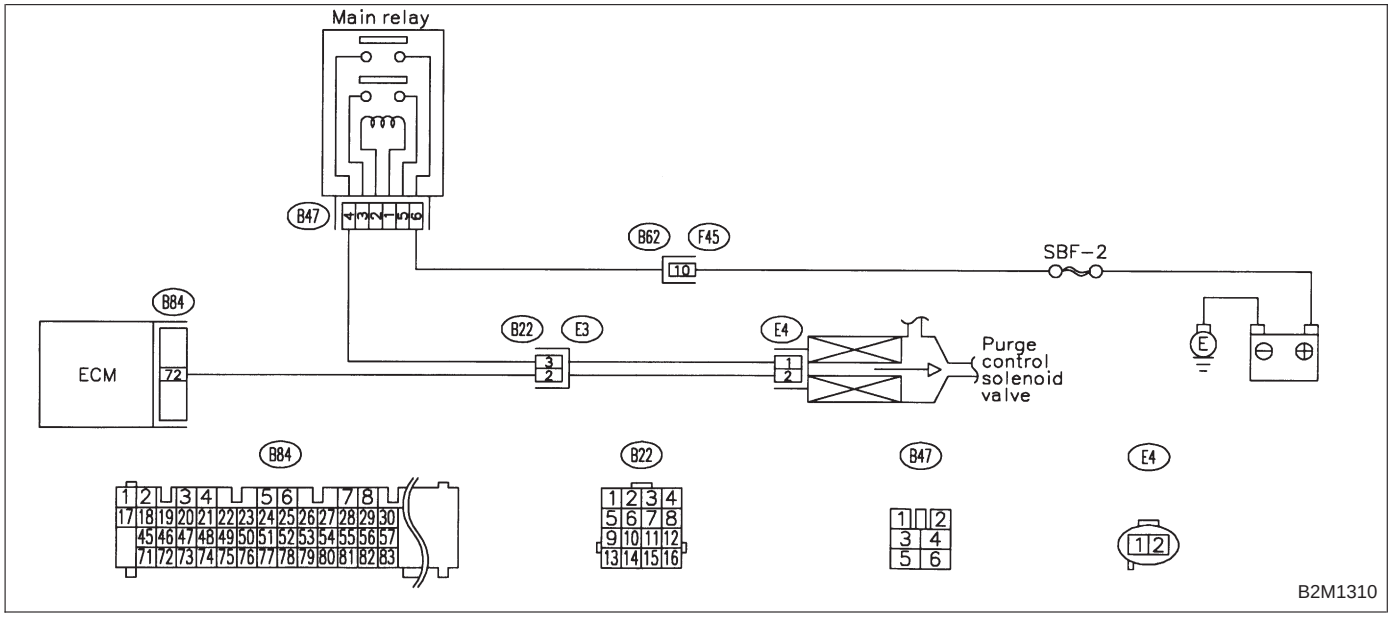

CAUTION:
After repair or replacement of faulty parts, conduct CLEAR MEMORY and INSPECTION MODES.
<Ref. to 2-7 [T3D0] and [T3E0].>

10AS1	CHECK DTC P0106, P0107, P0108, P0443, P1102, P1122 OR P1422 ON DISPLAY.

CHECK : ***Does the Subaru select monitor or OBD-II general scan tool indicate DTC P0106, P0107, P0108, P0443, P1102, P1122 or P1422?***

YES : Inspect the relevant DTC P0106, P0107, P0108, P0443, P1102, P1122 or P1422 using “10. Diagnostics Chart with Trouble Code”. <Ref. to 2-7 [T10A0].>

NOTE:
In this case, it is not necessary to inspect DTC P0441.

NO : Go to step **10AS2**.

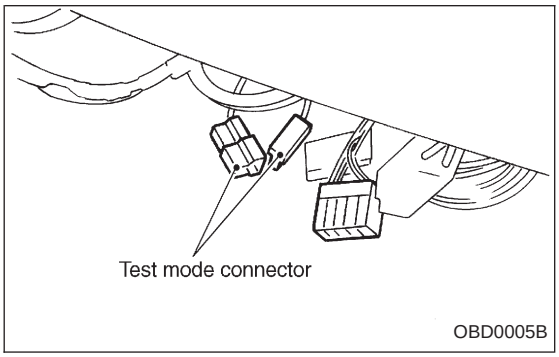

10AS2	CHECK PURGE CONTROL SOLENOID VALVE OPERATION.

1) Turn ignition switch to OFF.
2) Connect test mode connector at the lower portion of instrument panel (on the driver’s side), to the side of the center console box.
3) Turn ignition switch to ON.

CHECK : ***Does purge control solenoid valve produce operating sound at about 0.3 Hz?***

NOTE:
Purge control solenoid valve operation check can also be executed using Subaru Select Monitor (Function mode: FD02). For the procedure, refer to “COMPULSORY VALVE OPERATION CHECK MODE”. <Ref. to 2-7 [T3F0].>

YES : Go to next step 4).

NO : Replace purge control solenoid valve.

4) Disconnect canister purge hose from canister.

CHECK : ***Does pulsation occur by blowing through the canister purge hose?***

YES : Repair or replace evaporation line.

NOTE:
In this case, repair the following:
- Loose connections in evaporation line
- Cracks in evaporation line
- Clogging in evaporation line

NO : Replace purge control solenoid valve.

OBD	(FB1)
P0443	<CPC>

OBD0335

AT: DTC P0443 — EVAPORATIVE EMISSION CONTROL SYSTEM PURGE CONTROL VALVE CIRCUIT LOW INPUT —

DTC DETECTING CONDITION:

- Two consecutive driving cycles with fault

TROUBLE SYMPTOM:

- Erroneous idling

WIRING DIAGRAM:

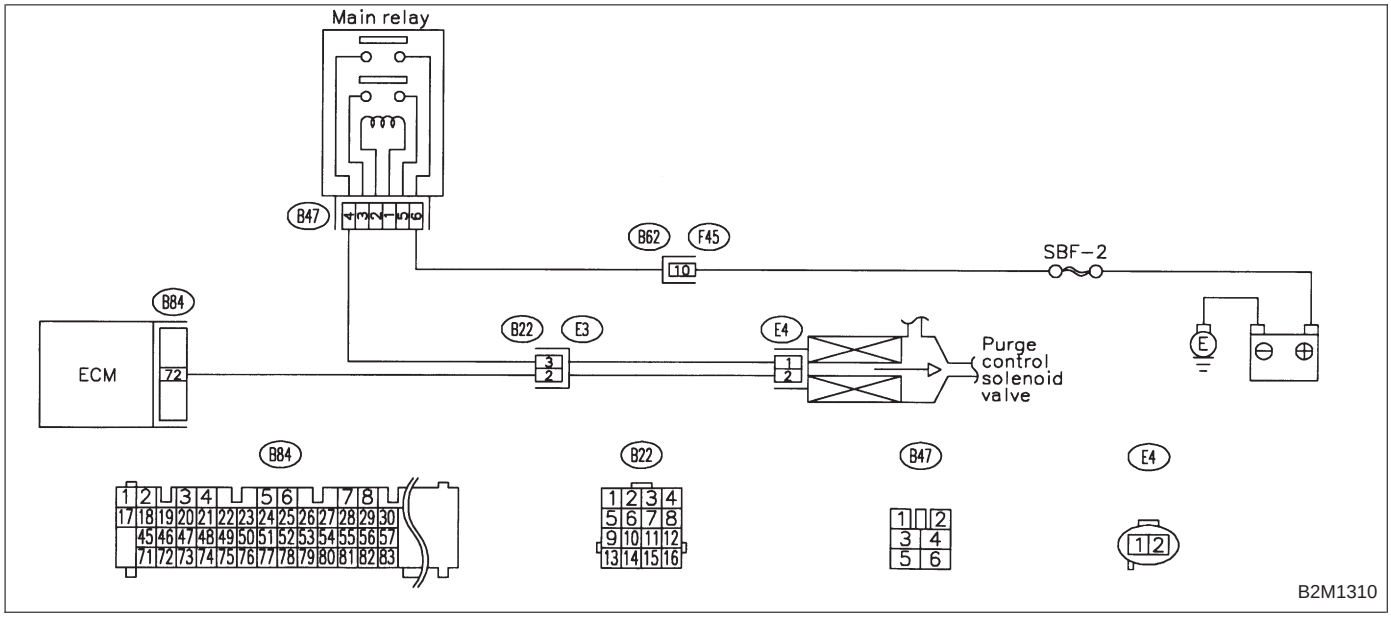

CAUTION:
After repair or replacement of faulty parts, conduct CLEAR MEMORY and INSPECTION MODES.
<Ref. to 2-7 [T3D0] and [T3E0].>

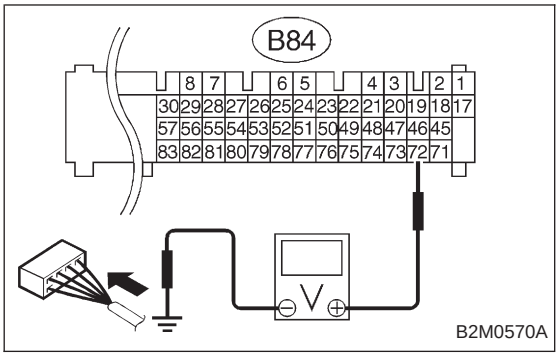

10AT1	CHECK OUTPUT SIGNAL FROM ECM.

1) Turn ignition switch to ON.
2) Measure voltage between ECM and chassis ground.

CHECK : ***Connector & terminal (B84) No. 72 (+) — Chassis ground (−): Is the voltage more than 10 V?***

YES : Even if MIL lights up, the circuit has returned to a normal condition at this time. Contact with SOA service.

NOTE:
Inspection by DTM is required, because probable cause is deterioration of multiple parts.

NO : Go to step **10AT2**.

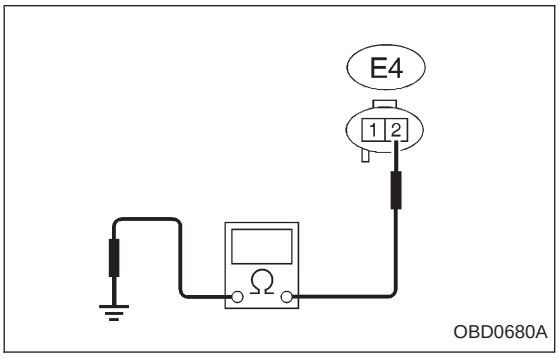

10AT2	CHECK HARNESS BETWEEN PURGE CONTROL SOLENOID VALVE AND ECM CONNECTOR.

1) Turn ignition switch to OFF.
2) Disconnect connectors from purge control solenoid valve and ECM.
3) Measure resistance of harness between purge control solenoid valve connector and engine ground.

CHECK : ***Connector & terminal (E4) No. 2 — Engine ground: Is the resistance less than 10 Ω?***

YES : Repair ground short circuit in harness between ECM and purge control solenoid valve connector.

NO : Go to next step 4).

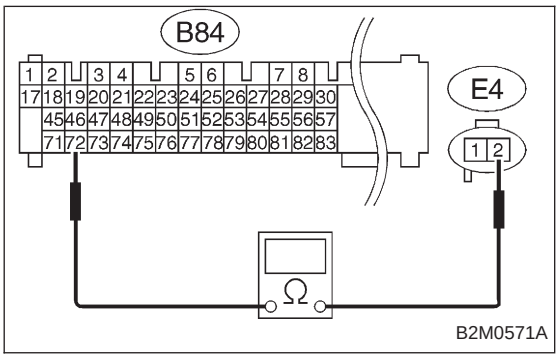

4) Measure resistance of harness between ECM and purge control solenoid valve of harness connector.

CHECK : ***Connector & terminal (B84) No. 72 — (E4) No. 2: Is the resistance less than 1 Ω?***

YES : Go to step **10AT3**.

NO : Repair open circuit in harness between ECM and purge control solenoid valve connector.

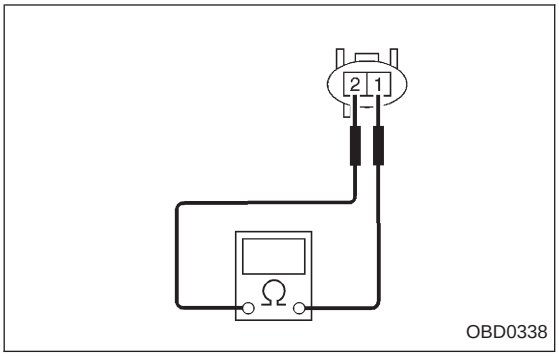

10AT3	CHECK PURGE CONTROL SOLENOID VALVE.

1) Remove purge control solenoid valve.
2) Measure resistance between purge control solenoid valve terminals.

CHECK : ***Terminals***
No. 1 — No. 2:
Is the resistance between 10 and 100 Ω?

YES : Go to step **10AT4**.

NO : Replace purge control solenoid valve.

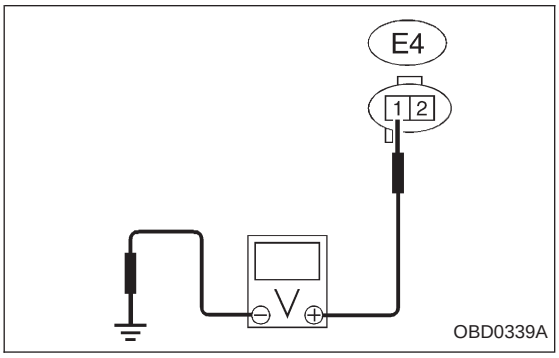

10AT4	CHECK POWER SUPPLY TO PURGE CONTROL SOLENOID VALVE.

1) Turn ignition switch to ON.
2) Measure voltage between purge control solenoid valve and engine ground.

CHECK : ***Connector & terminal***
(E4) No. 1 (+) — Engine ground (−):
Is the voltage more than 10 V?

YES : Go to next CHECK .

NO : Repair open circuit in harness between main relay and purge control solenoid valve connector.

CHECK : ***Is there poor contact in purge control solenoid valve connector?***

YES : Repair poor contact in purge control solenoid valve connector.

NO : Contact with SOA service.

NOTE:
Inspection by DTM is required, because probable cause is deterioration of multiple parts.

OBD (FB1)

P0446<VCMSOL_LO>

B2M1098

AU: DTC P0446 — EVAPORATIVE EMISSION CONTROL SYSTEM VENT CONTROL LOW INPUT —

DTC DETECTING CONDITION:

- Two consecutive driving cycles with fault

WIRING DIAGRAM:

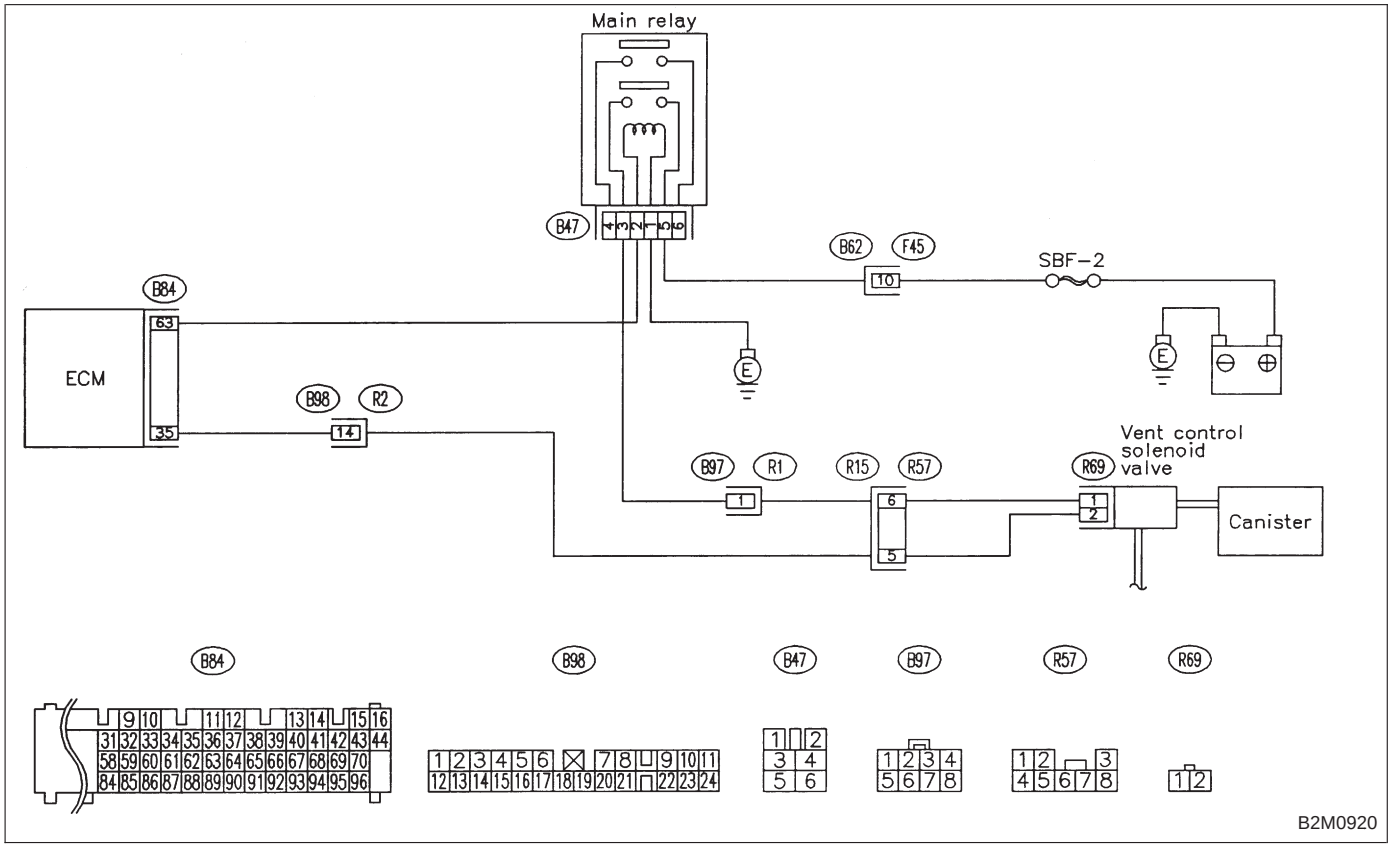

CAUTION:
After repair or replacement of faulty parts, conduct CLEAR MEMORY and INSPECTION MODES.
<Ref. to 2-7 [T3D0] and [T3E0].>

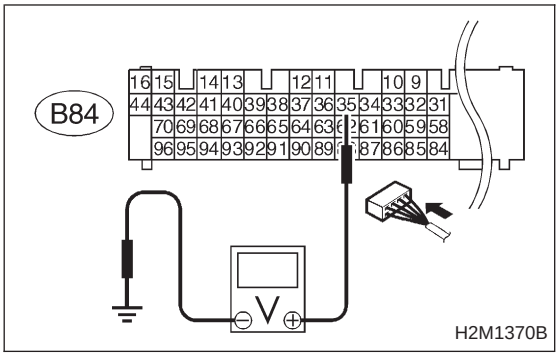

10AU1	CHECK OUTPUT SIGNAL FROM ECM.

1) Turn ignition switch to ON.
2) Measure voltage between ECM and chassis ground.

CHECK : ***Connector & terminal (B84) No. 35 (+) — Chassis ground (−): Is the voltage more than 10 V?***

YES : Go to next CHECK .

NO : Go to step **AU2**.

CHECK : ***Is there poor contact in ECM connector?***

YES : Repair poor contact in ECM connector.

NO : Even if MIL lights up, the circuit has returned to a normal condition at this time. (However, the possibility of poor contact still remains.)

NOTE:
In this case, repair the following:
- Poor contact in vent control solenoid valve connector
- Poor contact in ECM connector
- Poor contact in coupling connectors (B97, B98 and R57)

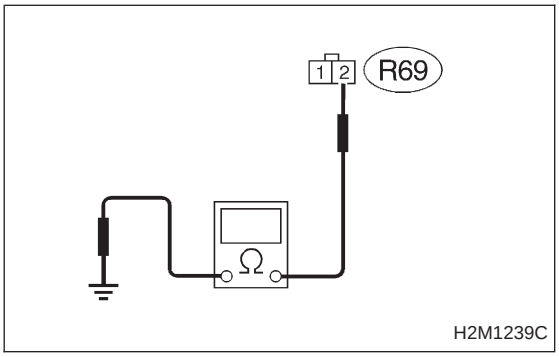

10AU2	CHECK HARNESS BETWEEN VENT CONTROL SOLENOID VALVE AND ECM CONNECTOR.

1) Turn ignition switch to OFF.
2) Disconnect connectors from vent control solenoid valve and ECM.
3) Measure resistance of harness between vent control solenoid valve connector and chassis ground.

CHECK : ***Connector & terminal (R69) No. 2 — Chassis ground: Is the resistance less than 10 Ω?***

YES : Repair ground short circuit in harness between ECM and vent control solenoid valve connector.

NO : Go to next step 4).

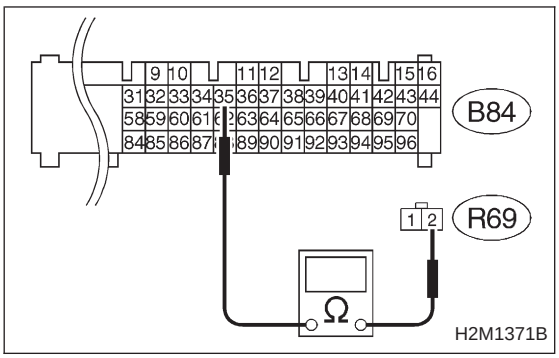

4) Measure resistance of harness between ECM and vent control solenoid valve connector.

CHECK : ***Connector & terminal (B84) No. 35 — (R69) No. 2: Is the voltage less than 1 Ω?***

YES : Go to step **10AU3**.

NO : Repair harness and connector.

NOTE:
In this case, repair the following:

- Open circuit in harness between ECM and vent control solenoid valve connector
- Poor contact in coupling connectors (B98 and R57)

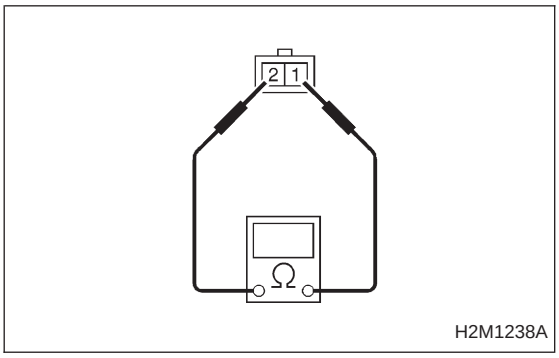

10AU3	CHECK VENT CONTROL SOLENOID VALVE.

Measure resistance between vent control solenoid valve terminals.

CHECK : ***Terminals***
No. 1 — No. 2:
Is the resistance between 10 and 100 Ω?

YES : Go to step **10AU4**.

NO : Replace vent control solenoid valve.

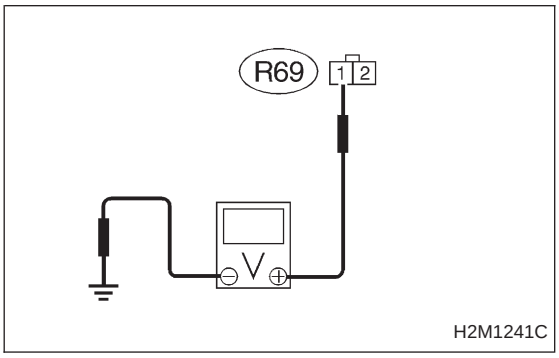

10AU4	CHECK POWER SUPPLY TO VENT CONTROL SOLENOID VALVE.

1) Turn ignition switch to ON.
2) Measure voltage between vent control solenoid valve and chassis ground.

CHECK : ***Connector & terminal***
(R69) No. 1 (+) — Chassis ground (−):
Is the voltage more than 10 V?

YES : Go to next CHECK .

NO : Repair harness and connector.

NOTE:
In this case, repair the following:
- Open circuit in harness between main relay and vent control solenoid valve
- Poor contact in coupling connectors (B97 and R57)
- Poor contact in main relay connector

CHECK : ***Is there poor contact in vent control solenoid valve connector?***

YES : Repair poor contact in vent control solenoid valve connector.

NO : Contact with SOA service.

NOTE:
Inspection by DTM is required, because probable cause is deterioration of multiple parts.

OBD (FB1)

P0451 <TNKP_F>

H2M1377

AV: DTC P0451 — EVAPORATIVE EMISSION CONTROL SYSTEM PRESSURE SENSOR RANGE/PERFORMANCE PROBLEM —

DTC DETECTING CONDITION:

- Two consecutive driving cycles with fault

WIRING DIAGRAM:

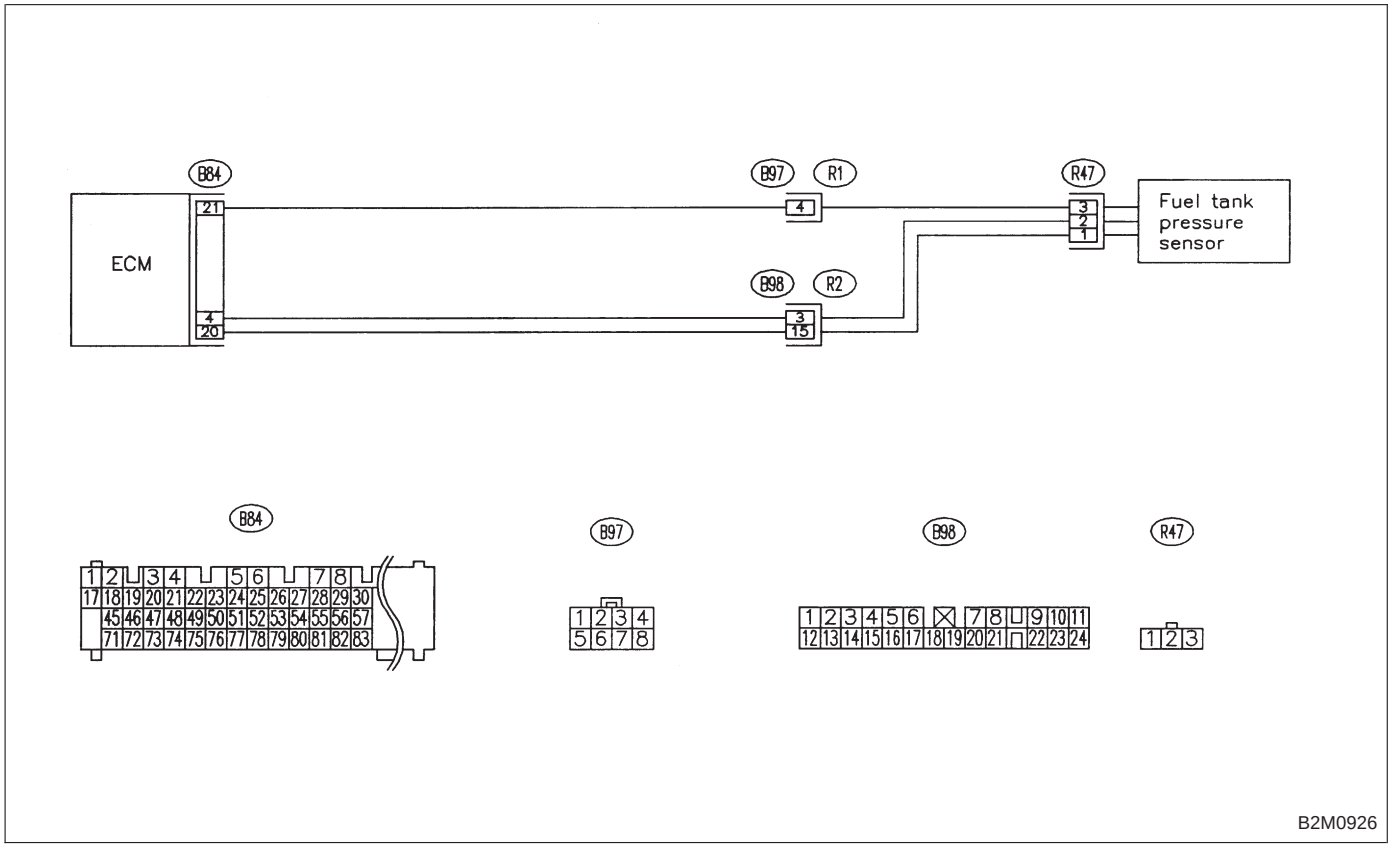

B2M0926

CAUTION:
After repair or replacement of faulty parts, conduct CLEAR MEMORY and INSPECTION MODES.
<Ref. to 2-7 [T3D0] and [T3E0].>

10AV1	CHECK PRESSURE/VACUUM LINE.

CHECK : ***Is there a fault in pressure/vacuum line?***

NOTE:
Check the following items.
- Disconnection, leakage and clogging of the vacuum hoses and pipes between fuel tank pressure sensor and fuel tank
- Disconnection, leakage and clogging of air ventilation hoses and pipes between fuel filler pipe and fuel tank

YES : Repair or replace hoses and pipes.

NO : Replace fuel tank pressure sensor.

OBD (FB1)

P0452 <TNKP_LOW>

B2M1099

AW: DTC P0452 — EVAPORATIVE EMISSION CONTROL SYSTEM PRESSURE SENSOR LOW INPUT —

DTC DETECTING CONDITION:

- Immediately at fault recognition

WIRING DIAGRAM:

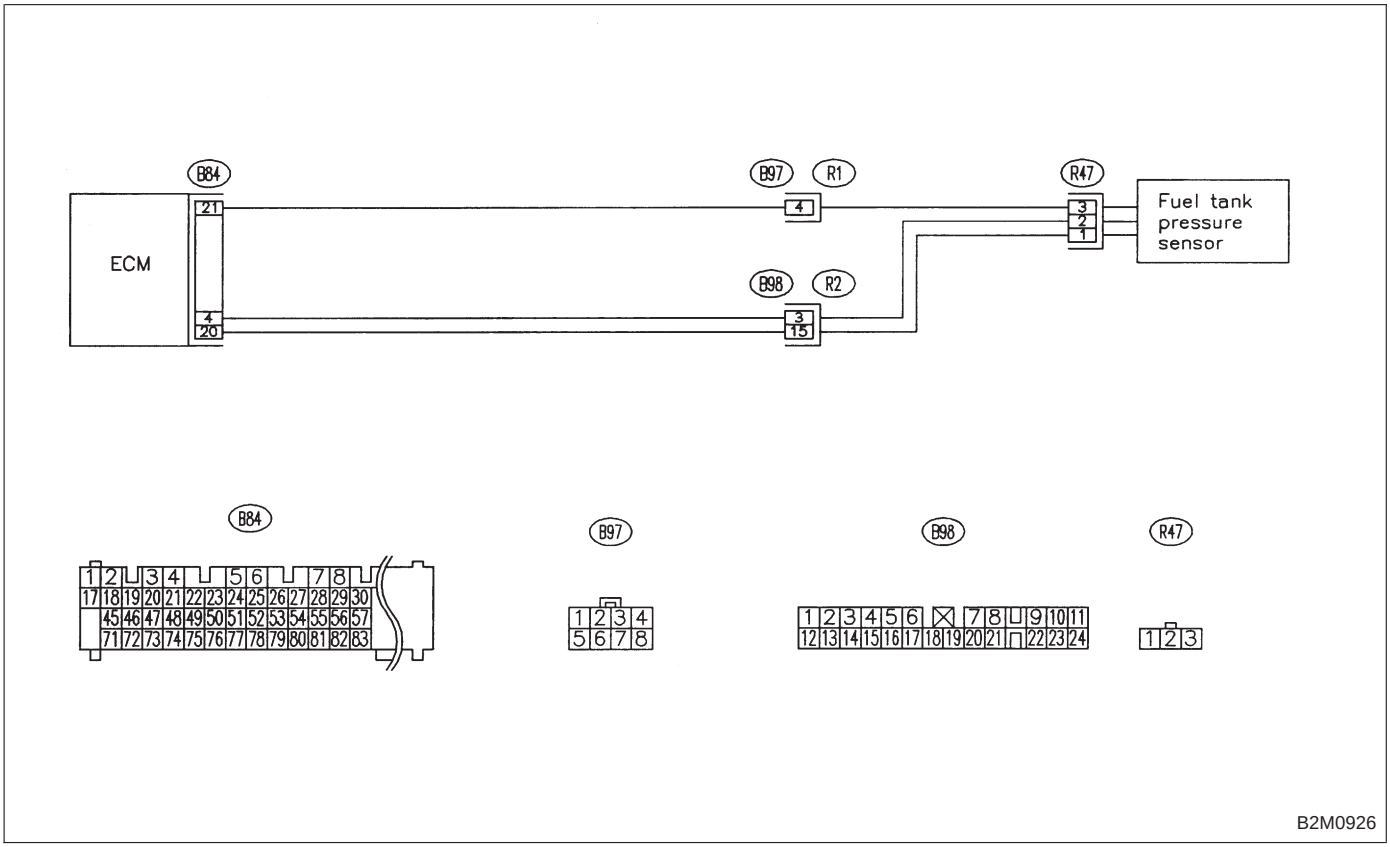

B2M0926

CAUTION:
After repair or replacement of faulty parts, conduct CLEAR MEMORY and INSPECTION MODES.
<Ref. to 2-7 [T3D0] and [T3E0].>

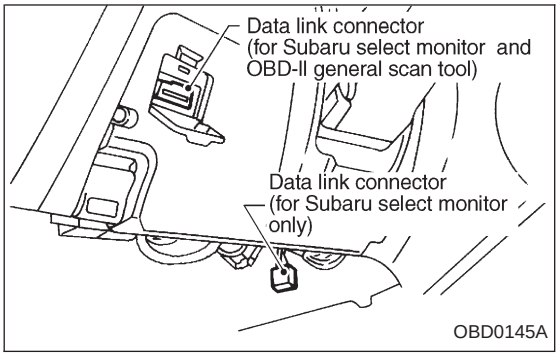

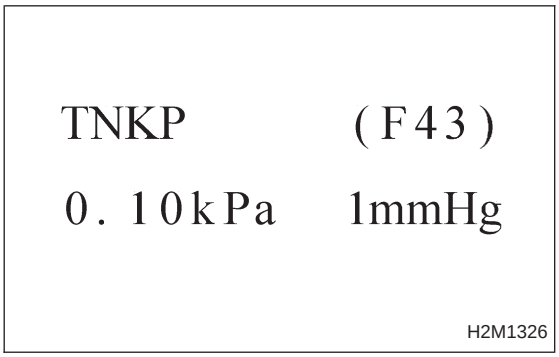

10AW1	CONNECT SUBARU SELECT MONITOR OR THE OBD-II GENERAL SCAN TOOL, AND READ DATA.

1) Turn ignition switch to OFF.
2) Remove fuel filler cap.
3) Install fuel filler cap.
4) Connect Subaru Select Monitor or the OBD-II general scan tool to data link connector.
5) Turn ignition switch to ON and Subaru Select Monitor or the OBD-II general scan tool switch to ON.
6) Read the data on Subaru Select Monitor or the OBD-II general scan tool.

● Subaru Select Monitor

Designate mode using function key.

Function mode: F43

● F43: Display shows pressure signal value sent from fuel tank pressure sensor.

CHECK : ***Is the value less than −2.8 kPa in function mode F43?***

YES : Go to step **10AW2**.

NO : Even if MIL lights up, the circuit has returned to a normal condition at this time.

● OBD-II general scan tool

For detailed operation procedures, refer to the OBD-II General Scan Tool Instruction Manual.

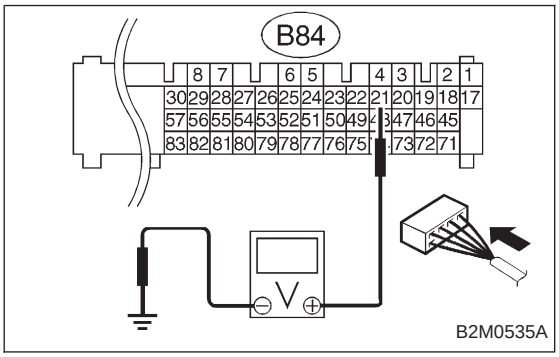

10AW2	CHECK INPUT SIGNAL FOR ECM. (USING VOLTAGE METER AND SUBARU SELECT MONITOR.)

1) Measure voltage between ECM connector and chassis ground.

CHECK : ***Connector & terminal (B84) No. 21 (+) — Chassis ground (−): Is the voltage more than 4.5 V?***

YES : Go to next step 2).

NO : Go to next CHECK .

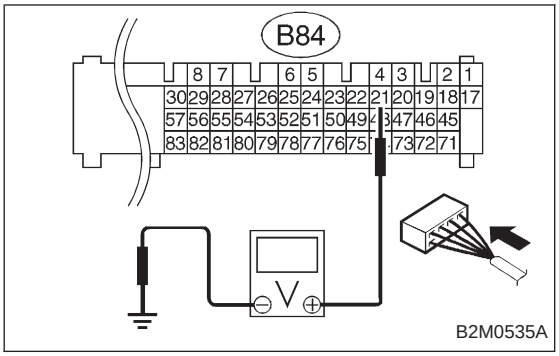

CHECK : ***Does the voltage change more than 4.5 V by shaking harness and connector of ECM while monitoring the value with voltage meter?***

YES : Repair poor contact in ECM connector.

NO : Contact with SOA service.

NOTE:
Inspection by DTM is required, because probable cause is deterioration of multiple parts.

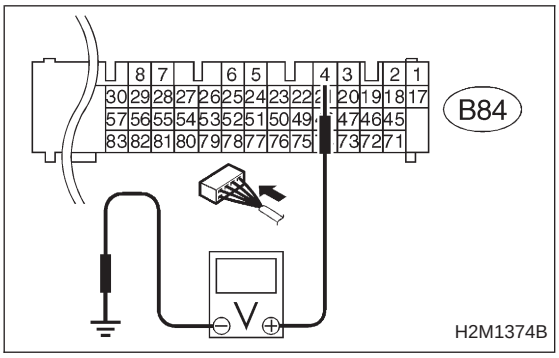

2) Measure voltage between ECM and chassis ground.

CHECK : ***Connector & terminal (B84) No. 4 (+) — Chassis ground (−): Is the voltage less than 0.2 V?***

YES : Go to step **10AW3**.

NO : Go to next step 3).

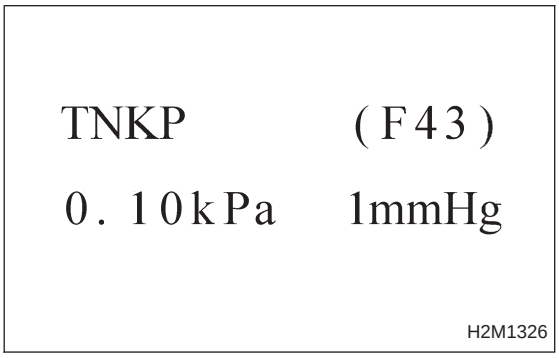

3) Read data on Subaru Select Monitor.

- Subaru Select Monitor

Designate mode using function key.

Function mode: F43

- F43: Display shows pressure signal value sent from fuel tank pressure sensor.

CHECK : ***Does the value change more than −2.8 kPa by shaking harness and connector of ECM while monitoring the value with Subaru select monitor?***

YES : Repair poor contact in ECM connector.

NO : Go to step **10AW3**.

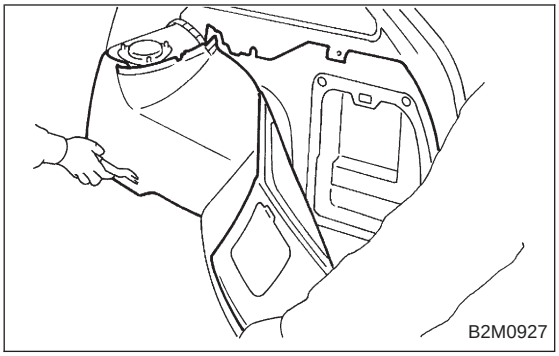

10AW3	CHECK HARNESS BETWEEN ECM AND FUEL TANK PRESSURE SENSOR CONNECTOR.

1) Turn ignition switch to OFF.
2) Detach right side trunk side trim panel (Sedan) or right side rear quarter trim panel (Wagon).
3) Remove right side rear quarter trim pocket (Wagon model only).
4) Detach right side rear quarter insulator (Wagon model only).

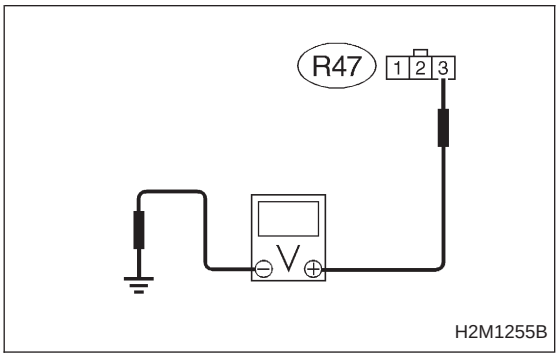

5) Disconnect connector from fuel tank pressure sensor.
6) Turn ignition switch to ON.
7) Measure voltage between fuel tank pressure sensor connector and chassis ground.

CHECK : ***Connector & terminal (R47) No. 3 (+) — Chassis ground (−): Is the voltage more than 4.5 V?***

YES : Go to next step 8).

NO : Repair harness and connector.

NOTE:
In this case, repair the following:
- Open circuit in harness between ECM and fuel tank pressure sensor connector
- Poor contact in coupling connector (B97)

8) Turn ignition switch to OFF.
9) Disconnect connector from ECM.
10) Measure resistance of harness between ECM and pressure sensor connector.

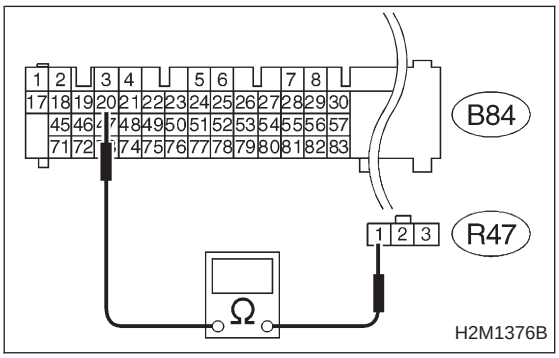

CHECK : ***Connector & terminal (B84) No. 20 — (R47) No. 1: Is the resistance less than 1 Ω?***

YES : Go to next step 11).

NO : Repair harness and connector.

NOTE:
In this case, repair the following:
- Open circuit in harness between ECM and fuel tank pressure sensor connector
- Poor contact in coupling connector (B98)

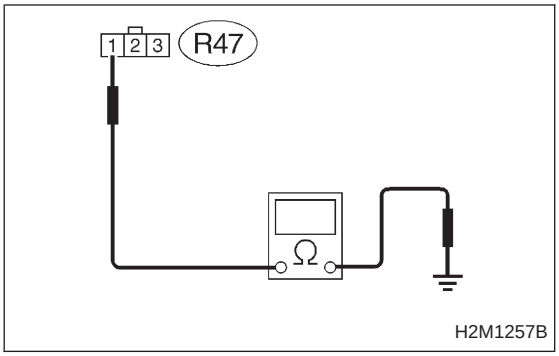

11) Measure resistance of harness between fuel tank pressure sensor connector and chassis ground.

CHECK : ***Connector & terminal (R47) No. 1 — Chassis ground: Is the resistance more than 500 kΩ?***

YES : Go to next CHECK .

NO : Repair ground short circuit in harness between ECM and fuel tank pressure sensor connector.

CHECK : ***Is there poor contact in fuel tank pressure sensor connector?***

YES : Repair poor contact in fuel tank pressure sensor connector.

NO : Replace fuel tank pressure sensor.

OBD (FB1)

P0453 <TNKP_HI>

B2M1100

AX: DTC P0453 — EVAPORATIVE EMISSION CONTROL SYSTEM PRESSURE SENSOR HIGH INPUT —

DTC DETECTING CONDITION:

- Immediately at fault recognition

WIRING DIAGRAM:

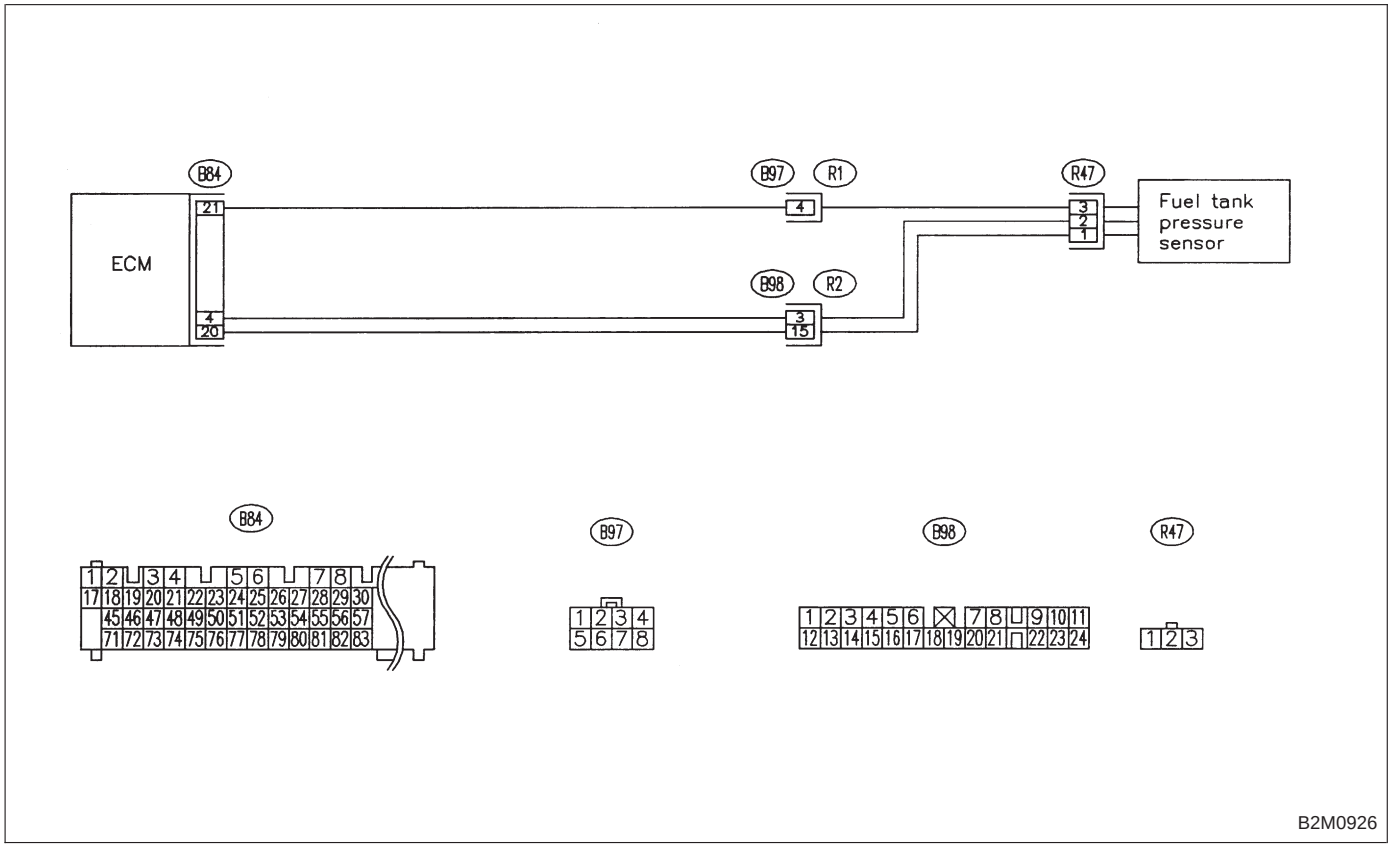

B2M0926

CAUTION:
After repair or replacement of faulty parts, conduct CLEAR MEMORY and INSPECTION MODES.
<Ref. to 2-7 [T3D0] and [T3E0].>

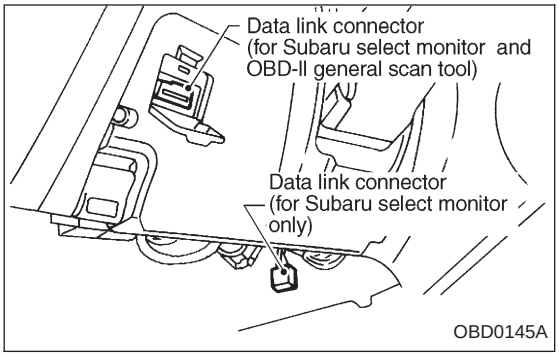

10AX1	CONNECT SUBARU SELECT MONITOR OR THE OBD-II GENERAL SCAN TOOL, AND READ DATA.

1) Turn ignition switch to OFF.
2) Remove fuel filler cap.
3) Install fuel filler cap.
4) Connect Subaru Select Monitor or the OBD-II general scan tool to data link connector.
5) Turn ignition switch to ON and Subaru Select Monitor or the OBD-II general scan tool switch to ON.

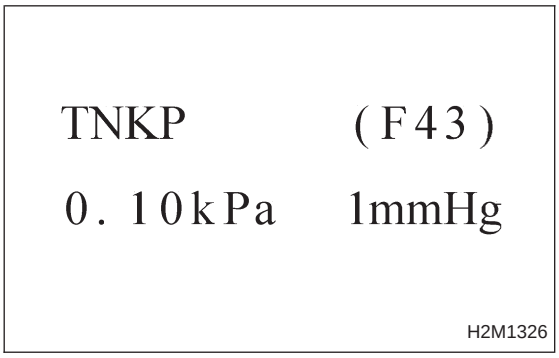

6) Read the data on Subaru Select Monitor or the OBD-II general scan tool.
● Subaru Select Monitor
Designate mode using function key.

Function mode: F43

● F43: Display shows pressure signal value sent from fuel tank pressure sensor.

CHECK : ***Is the value more than 2.8 kPa in function mode F43?***

YES : Go to step **10AX4**.

NO : Go to step **10AX2**.

● OBD-II general scan tool

For detailed operation procedures, refer to the OBD-II General Scan Tool Instruction Manual.

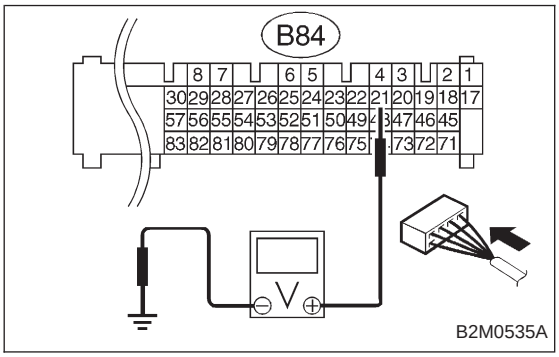

10AX2	CHECK INPUT SIGNAL FOR ECM. (USING VOLTAGE METER AND SUBARU SELECT MONITOR.)

1) Measure voltage between ECM connector and chassis ground.

CHECK : ***Connector & terminal (B84) No. 21 (+) — Chassis ground (−): Is the voltage more than 4.5 V?***

YES : Go to next step 2).

NO : Go to next CHECK .

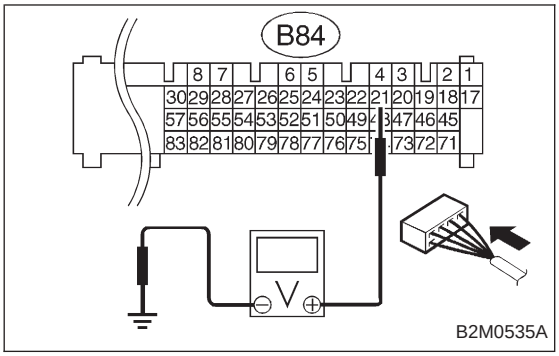

CHECK : ***Does the voltage change more than 4.5 V by shaking harness and connector of ECM while monitoring the value with voltage meter?***

YES : Repair poor contact in ECM connector.

NO : Replace ECM.

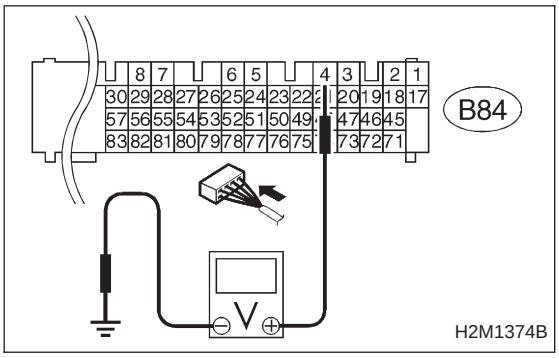

2) Measure voltage between ECM and chassis ground.

CHECK : ***Connector & terminal (B84) No. 4 (+) — Chassis ground (−): Is the voltage less than 0.2 V?***

YES : Go to step **10AX3**.

NO : Go to next step 3).

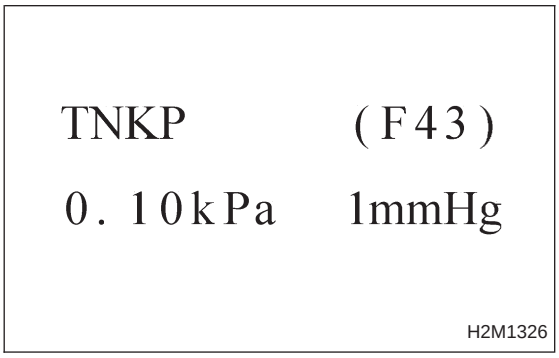

3) Read data on Subaru Select Monitor.

● Subaru Select Monitor

Designate mode using function key.

Function mode: F43

● F43: Display shows pressure signal value sent from fuel tank pressure sensor.

CHECK : ***Does the value change more than −2.8 kPa by shaking harness and connector of ECM while monitoring the value with Subaru select monitor?***

YES : Repair poor contact in ECM connector.

NO : Go to step **10AX3**.

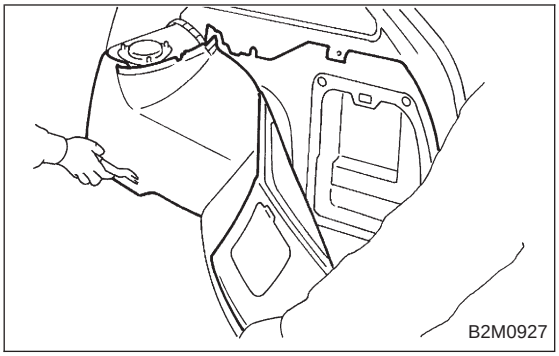

10AX3	CHECK HARNESS BETWEEN ECM AND FUEL TANK PRESSURE SENSOR CONNECTOR.

1) Turn ignition switch to OFF.
2) Detach right side trunk side trim panel (Sedan) or right side rear quarter trim panel (Wagon).
3) Remove right side rear quarter trim pocket (Wagon model only).
4) Detach right side rear quarter insulator (Wagon model only).

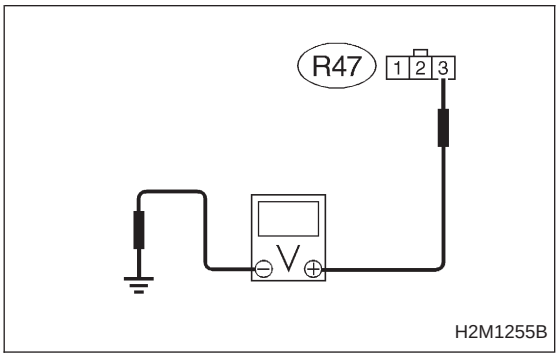

5) Disconnect connector from fuel tank pressure sensor.
6) Turn ignition switch to ON.
7) Measure voltage between fuel tank pressure sensor connector and chassis ground.

CHECK : ***Connector & terminal (R47) No. 3 (+) — Chassis ground (−): Is the voltage more than 4.5 V?***

YES : Go to next step 8).

NO : Repair harness and connector.

NOTE:
In this case, repair the following:
- Open circuit in harness between ECM and fuel tank pressure sensor connector
- Poor contact in coupling connector (B97)

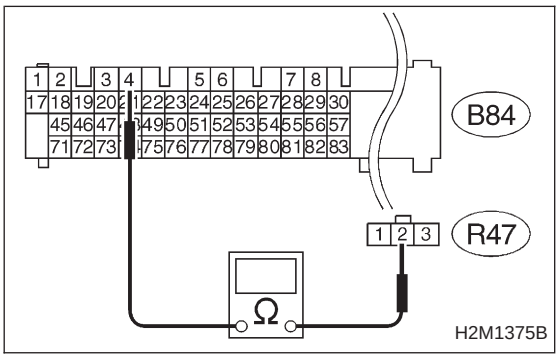

8) Turn ignition switch to OFF.
9) Disconnect connector from ECM.
10) Measure resistance of harness between ECM and pressure sensor connector.

CHECK : ***Connector & terminal (B84) No. 4 — (R47) No. 2: Is the resistance less than 1 Ω?***

YES : Go to next CHECK .

NO : Repair harness and connector.

NOTE:
In this case, repair the following:
● Open circuit in harness between ECM and fuel tank pressure sensor connector
● Poor contact in coupling connector (B98)

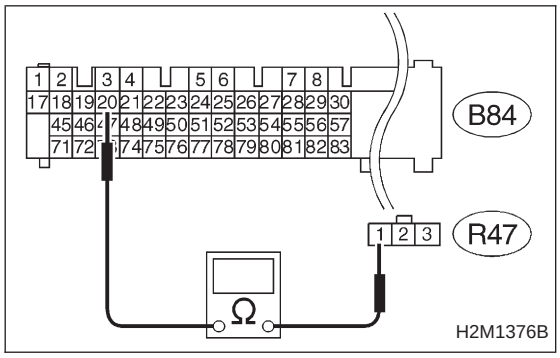

CHECK : ***Connector & terminal (B84) No. 20 — (R47) No. 1: Is the resistance less than 1 Ω?***

YES : Go to next CHECK .

NO : Repair harness and connector.

NOTE:
In this case, repair the following:
● Open circuit in harness between ECM and fuel tank pressure sensor connector
● Poor contact in coupling connector (B98)

CHECK : ***Is there poor contact in fuel tank pressure sensor connector?***

YES : Repair poor contact in fuel tank pressure sensor connector.

NO : Replace fuel tank pressure sensor.

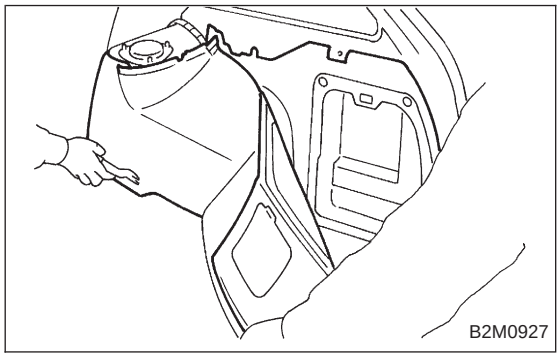

10AX4	**CHECK HARNESS BETWEEN ECM AND FUEL TANK PRESSURE SENSOR CONNECTOR.**

1) Turn ignition switch to OFF and Subaru Select Monitor or the OBD-II general scan tool switch to OFF.
2) Detach right side trunk side trim panel (Sedan) or right side rear quarter trim panel (Wagon).
3) Remove right side rear quarter trim pocket (Wagon model only).
4) Detach right side rear quarter insulator (Wagon model only).

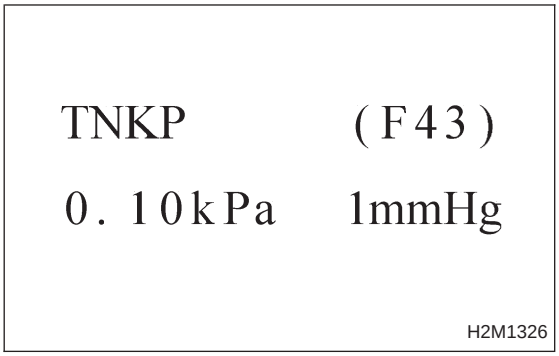

5) Disconnect connector from fuel tank pressure sensor.
6) Remove fuel filler cap.
7) Install fuel filler cap.
8) Turn ignition switch to ON and Subaru Select Monitor or the OBD-II general scan tool switch to ON.
9) Read data on Subaru select monitor or the OBD-II general scan tool.

● Subaru Select Monitor

Designate mode using function key.

Function mode: F43

CHECK ***: Is the value more than 2.8 kPa in function mode F43?***

YES : Repair battery short circuit in harness between ECM and fuel tank pressure sensor connector.

NO : Replace fuel tank pressure sensor.

● OBD-II general scan tool

For detailed operation procedures, refer to the OBD-II General Scan Tool Instruction Manual.

OBD (FB1)

P0461 <FLVL_R>

B2M1101

AY: DTC P0461 — FUEL LEVEL SENSOR CIRCUIT RANGE/ PERFORMANCE PROBLEM —

DTC DETECTING CONDITION:

- Two consecutive driving cycles with fault

WIRING DIAGRAM:

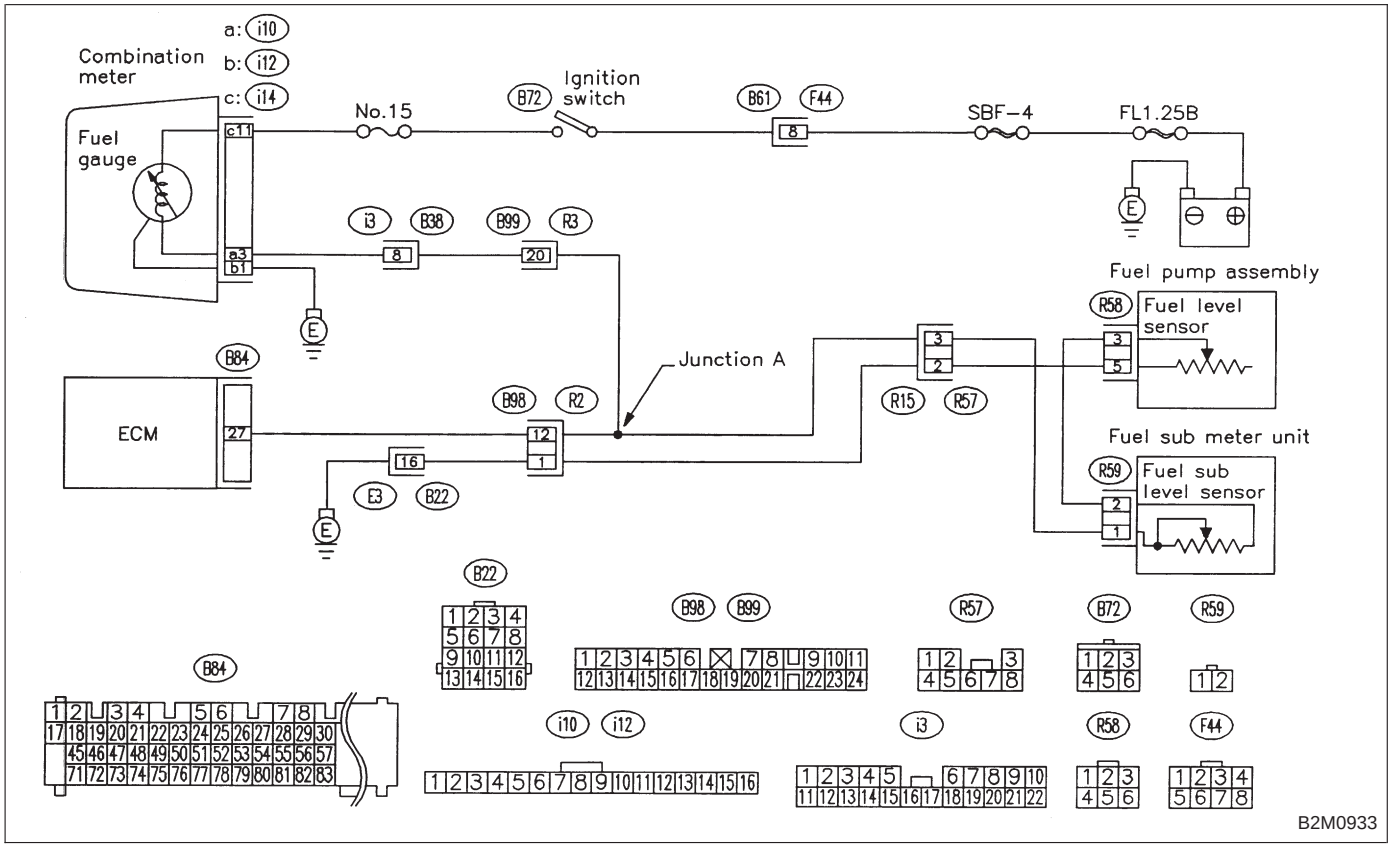

CAUTION:
After repair or replacement of faulty parts, conduct CLEAR MEMORY and INSPECTION MODES.
<Ref. to 2-7 [T3D0] and [T3E0].>

10AY1	CHECK DTC P0462 OR P0463 ON DISPLAY.

CHECK : ***Does the Subaru select monitor or OBD-II general scan tool indicate DTC P0462 or P0463?***

YES : Inspect DTC P0462 or P0463 using “10. Diagnostics Chart with Trouble Code”. <Ref. to 2-7 [T10A0].>

NOTE:
In this case, it is not necessary to inspect this trouble.

NO : Replace fuel sending unit and fuel sub meter unit.

OBD (FB1)

P0462 <FLVL_LOW>

B2M1102

AZ: DTC P0462 — FUEL LEVEL SENSOR CIRCUIT LOW INPUT —

DTC DETECTING CONDITION:

- Two consecutive driving cycles with fault

WIRING DIAGRAM:

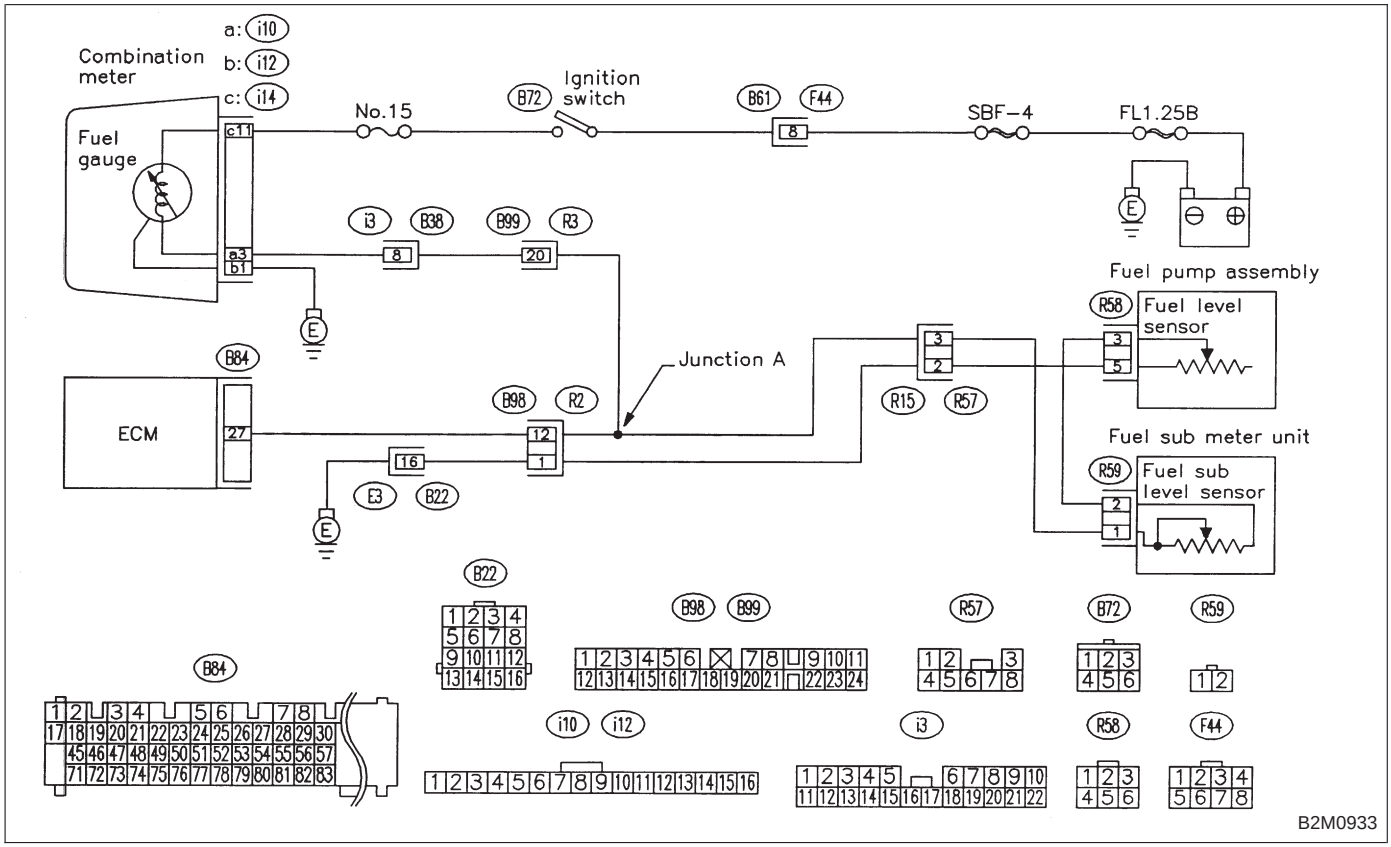

CAUTION:
After repair or replacement of faulty parts, conduct CLEAR MEMORY and INSPECTION MODES.
<Ref. to 2-7 [T3D0] and [T3E0].>

10AZ1	CHECK SPEEDOMETER AND TACHOMETER OPERATION IN COMBINATION METER.

CHECK : ***Does speedometer and tachometer operate normally?***

YES : Go to step **10AZ3**.

NO : Go to step **10AZ2**.

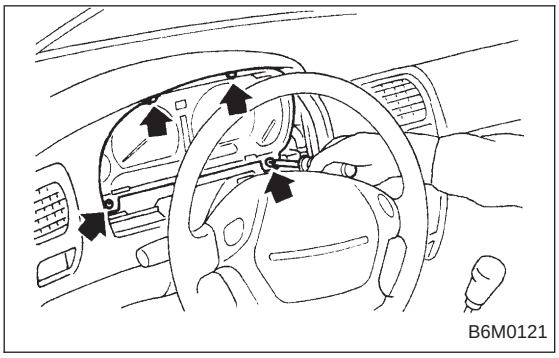

10AZ2	CHECK GROUND CIRCUIT OF COMBINATION METER.

1) Turn ignition switch to OFF.
2) Pull out combination meter from instrument panel. <Ref. to 6-2 [W13A1].>
3) Disconnect connector from combination meter.

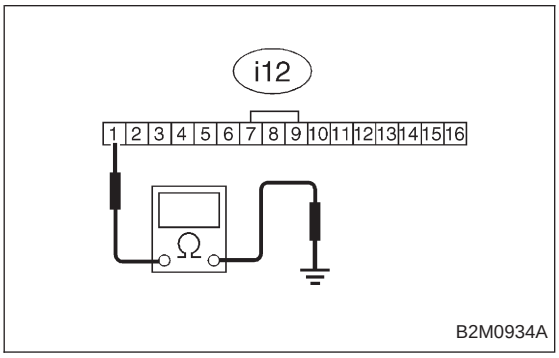

4) Measure resistance of harness between combination meter connector and chassis ground.

CHECK : ***Connector & terminal (i12) No. 1 — Chassis ground: Is resistance less than 5 Ω?***

YES : Repair or replace combination meter.

NO : Repair harness and connector.

NOTE:
In this case, repair the following:
- Open circuit in harness between combination meter connector and grounding terminal
- Poor contact in combination meter connector
- Poor contact in grounding terminal

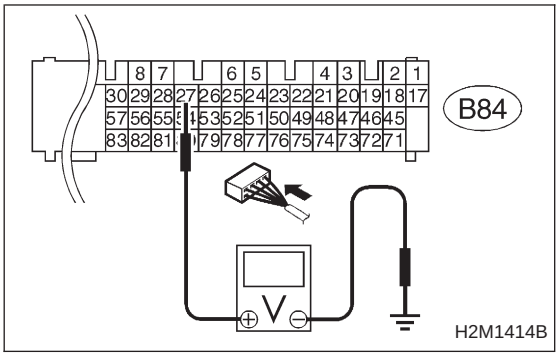

10AZ3	CHECK INPUT SIGNAL FOR ECM. (USING VOLTAGE METER AND SUBARU SELECT MONITOR.)

1) Turn ignition switch to ON. (Engine OFF)
2) Measure voltage between ECM connector and chassis ground.

CHECK : ***Connector & terminal (B84) No. 27 (+) — Chassis ground (−): Is the voltage less than 0.12 V?***

YES : Go to step **10AZ4**.

NO : Go to next CHECK .

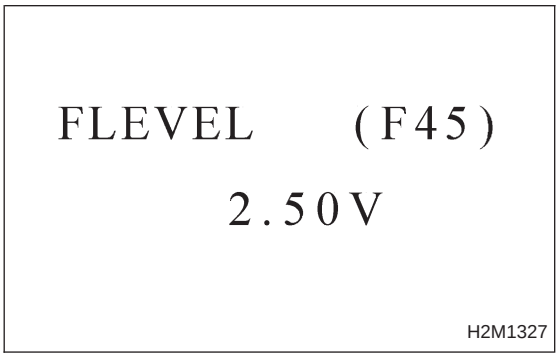

CHECK : ***Does the value change less than 0.12 V by shaking harness and connector of ECM while monitoring the value with Subaru Select Monitor?***

- Subaru Select Monitor

Designate mode using function key.

Function mode: F45

- F45: Fuel level sensor output signal is indicated.

YES : Repair poor contact in ECM connector.

NO : Even if MIL lights up, the circuit has returned to a normal condition at this time. A temporary poor contact of the connector may be the cause.

NOTE:
In this case, repair the following:
- Poor contact in fuel pump connector
- Poor contact in combination meter connector
- Poor contact in ECM connector
- Poor contact in coupling connector (i3, B99, B22, B98 and R57)

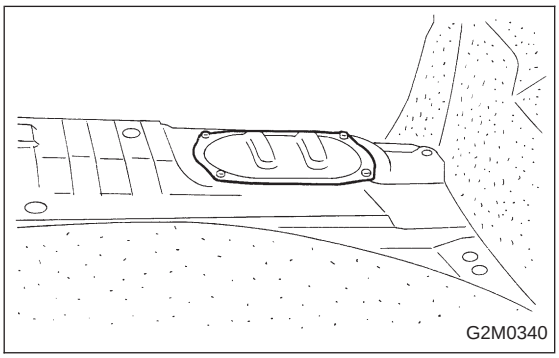

10AZ4	CHECK HARNESS BETWEEN ECM, COMBINATION METER AND FUEL PUMP CONNECTOR.

1) Turn ignition switch to OFF.
2) Remove fuel pump access hole lid located on the right rear of trunk compartment floor (Sedan) or luggage compartment floor (Wagon).

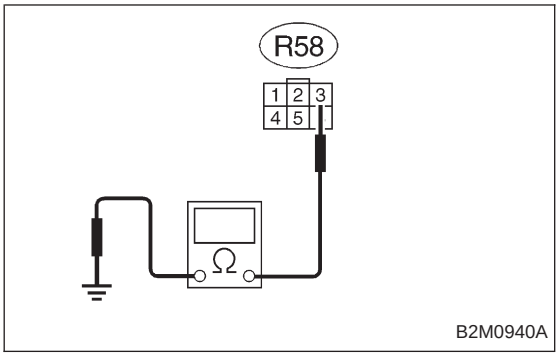

3) Disconnect connector from fuel pump.
4) Measure resistance of harness between fuel pump connector and chassis ground.

CHECK : ***Connector & terminal (R58) No. 3 — Chassis ground: Is the resistance less than 10 Ω?***

YES : Go to next step 5).

NO : Go to step **10AZ5**.

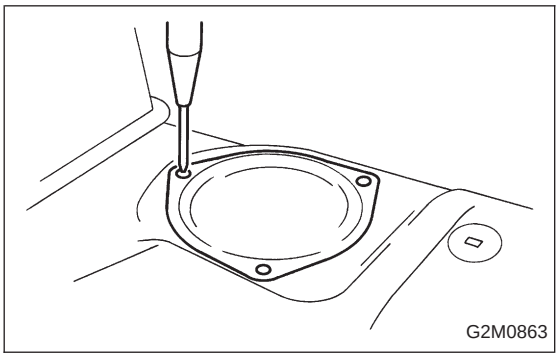

5) Remove service hole cover located on the left rear of trunk compartment floor (Sedan) or luggage compartment floor (Wagon).

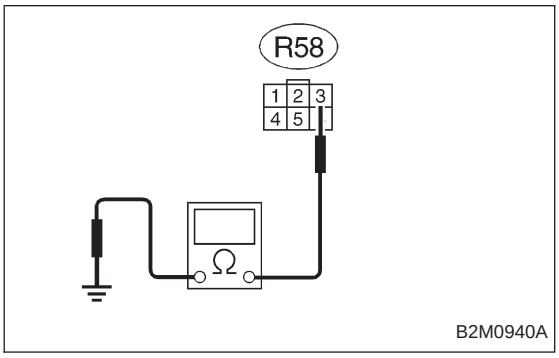

6) Disconnect connector from fuel sub meter unit.
7) Measure resistance of harness between fuel pump connector and chassis ground.

CHECK : ***Connector & terminal (R58) No. 3 — Chassis ground: Is the resistance less than 10 Ω?***

YES : Repair ground short circuit in harness between fuel pump and fuel sub meter unit connector.

NO : Go to next step 8).

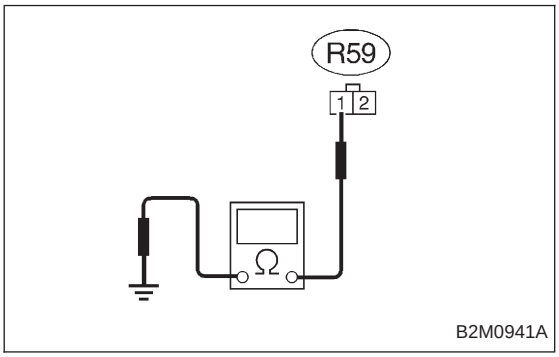

8) Separate fuel tank cord connector (R57) and rear wiring harness connector (R15).
9) Measure resistance of harness between fuel sub meter unit connector and chassis ground.

CHECK : ***Connector & terminal (R59) No. 1 — Chassis ground: Is the resistance less than 10 Ω?***

YES : Repair ground short circuit in fuel tank cord.

NO : Go to next step 10).

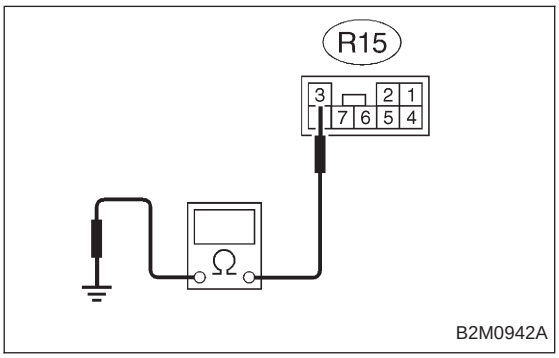

10) Separate rear wiring harness connector (R2) and bulkhead wiring harness connector (B98).
11) Measure resistance of harness between rear wiring harness connector and chassis ground.

CHECK : ***Connector & terminal (R15) No. 3 — Chassis ground: Is the resistance less than 10 Ω?***

YES : Go to next step 12).

NO : Repair ground short circuit in bulkhead wiring harness.

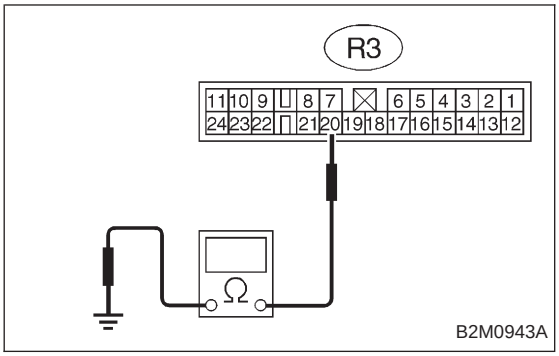

12) Separate rear wiring harness connector (R3) and bulkhead wiring harness connector (B99).
13) Measure resistance of harness between rear wiring harness connector and chassis ground.

CHECK : ***Connector & terminal (R3) No. 20 — Chassis ground: Is the resistance less than 10 Ω?***

YES : Repair ground short circuit in rear wiring harness.

NO : Go to next step 14).

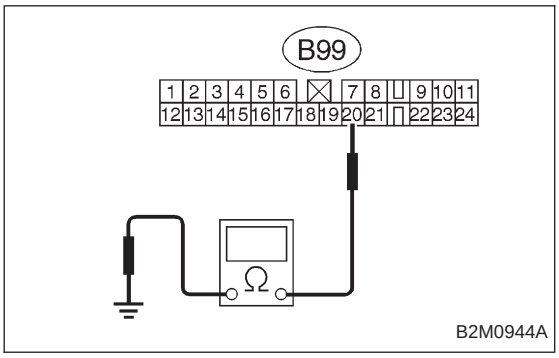

14) Separate bulkhead wiring harness connector (B38) and instrument panel wiring harness connector (i3).
15) Measure resistance of harness between bulkhead wiring harness connector and chassis ground.

CHECK : ***Connector & terminal (B99) No. 20 — Chassis ground: Is the resistance less than 10 Ω?***

YES : Repair ground short circuit in bulkhead wiring harness.

NO : Repair ground short circuit in instrument panel wiring harness.

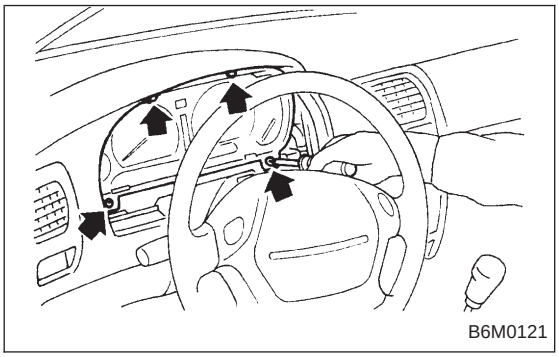

10AZ5	**CHECK HARNESS BETWEEN COMBINATION METER AND FUEL PUMP CONNECTOR.**

1) Connect connector to fuel pump.
2) Pull out combination meter from instrument panel. <Ref. to 6-2 [W13A1].>
3) Disconnect connector from combination meter.

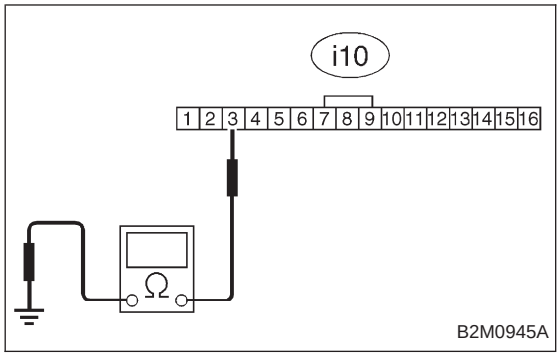

4) Measure resistance of harness between combination meter connector and chassis ground.

CHECK : ***Connector & terminal (i10) No. 3 — Chassis ground: Is the resistance less than 200 Ω?***

YES : Go to step **10AZ6**.

NO : Repair harness and connector.

NOTE:
In this case, repair the following:
- Open circuit in harness between combination meter connector and junction A on rear wiring harness
- Poor contact in coupling connectors (i3 and B99)

10AZ6	CHECK COMBINATION METER.

1) Disconnect speedometer cable from combination meter and remove combination meter.

CHECK : ***Is the fuel meter installation screw tightened securely?***

YES : Go to next step 2).

NO : Tighten fuel meter installation screw securely.

2) Remove printed circuit plate assembly from combination meter assembly.

CHECK : ***Is there flaw or burning on printed circuit plate assembly?***

YES : Replace printed circuit plate assembly.

NO : Replace fuel meter assembly.

OBD (FB1)

P0463 <FLVL_HI>

B2M1103

BA: DTC P0463 — FUEL LEVEL SENSOR CIRCUIT HIGH INPUT —

DTC DETECTING CONDITION:

- Two consecutive driving cycles with fault

WIRING DIAGRAM:

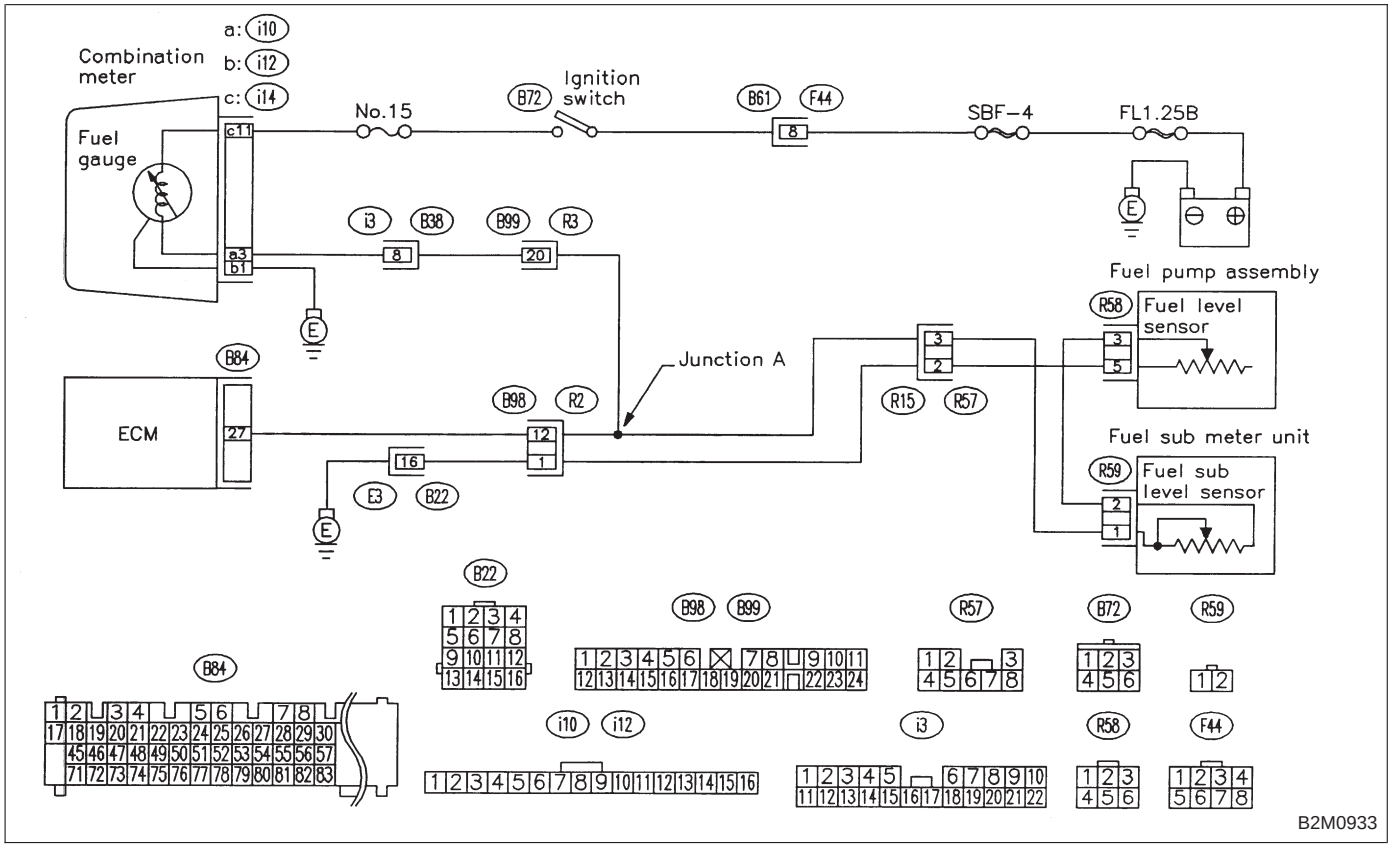

CAUTION:
After repair or replacement of faulty parts, conduct CLEAR MEMORY and INSPECTION MODES.
<Ref. to 2-7 [T3D0] and [T3E0].>

10BA1	CHECK SPEEDOMETER AND TACHOMETER OPERATION IN COMBINATION METER.

CHECK : ***Does speedometer and tachometer operate normally?***

YES : Go to step **10BA3**.

NO : Go to step **10BA2**.

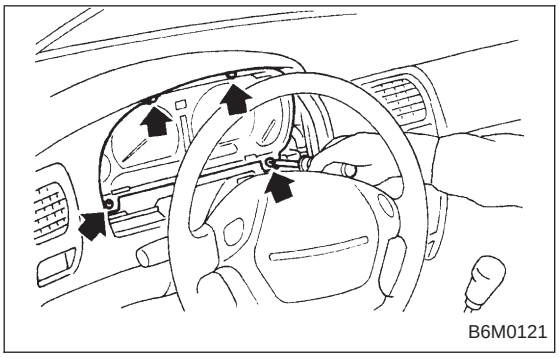

10BA2	CHECK GROUND CIRCUIT OF COMBINATION METER.

1) Turn ignition switch to OFF.
2) Pull out combination meter from instrument panel. <Ref. to 6-2 [W13A1].>
3) Disconnect connector from combination meter.

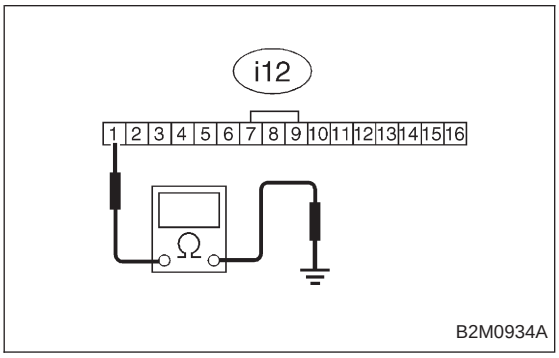

4) Measure resistance of harness between combination meter connector and chassis ground.

CHECK : ***Connector & terminal (i12) No. 1 — Chassis ground: Is resistance less than 5 Ω?***

YES : Repair or replace combination meter.

NO : Repair harness and connector.

NOTE:
In this case, repair the following:
- Open circuit in harness between combination meter connector and grounding terminal
- Poor contact in combination meter connector
- Poor contact in grounding terminal

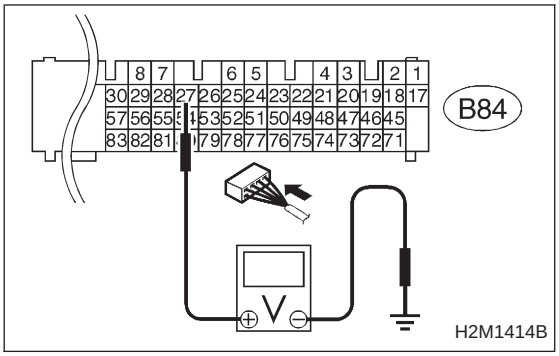

10BA3	CHECK INPUT SIGNAL FOR ECM. (USING VOLTAGE METER AND SUBARU SELECT MONITOR.)

1) Turn ignition switch to ON. (Engine OFF)
2) Measure voltage between ECM connector and chassis ground.

CHECK : ***Connector & terminal (B84) No. 27 (+) — Chassis ground (−): Is the voltage more than 4.75 V?***

YES : Go to step **10BA4**.

NO : Even if MIL lights up, the circuit has returned to a normal condition at this time. A temporary poor contact of the connector may be the cause.

NOTE:
In this case, repair the following:
- Poor contact in fuel pump connector
- Poor contact in combination meter connector
- Poor contact in ECM connector
- Poor contact in coupling connector (i3, B99, B22, B98 and R57)

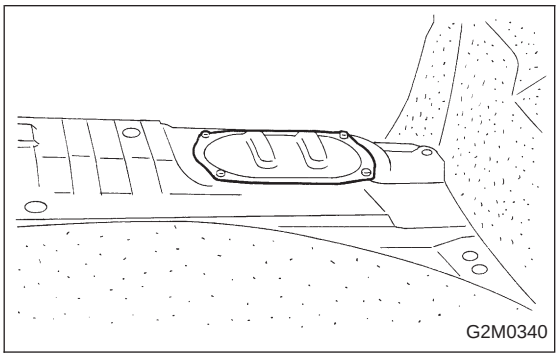

10BA4	CHECK FUEL LEVEL SENSOR.

1) Turn ignition switch to OFF.
2) Remove fuel pump access hole lid located on the right rear of trunk compartment floor (Sedan) or luggage compartment floor (Wagon).

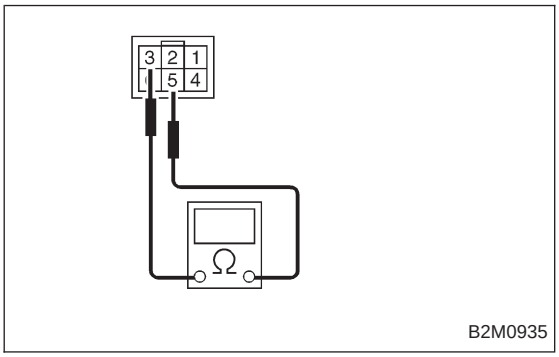

3) Disconnect connector from fuel pump.
4) Measure resistance between connector terminals of fuel pump.

CHECK : ***Terminals No. 3 — No. 5: Is the resistance less than 100 Ω?***

YES : Go to step **10BA5**.

NO : Replace fuel sending unit.

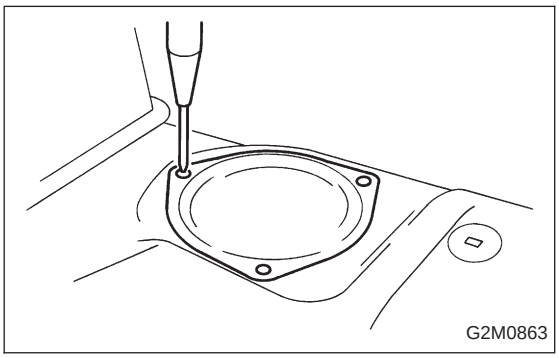

10BA5	CHECK FUEL SUB LEVEL SENSOR.

1) Remove service hole cover located on the left rear of trunk compartment floor (Sedan) or luggage compartment floor (Wagon).

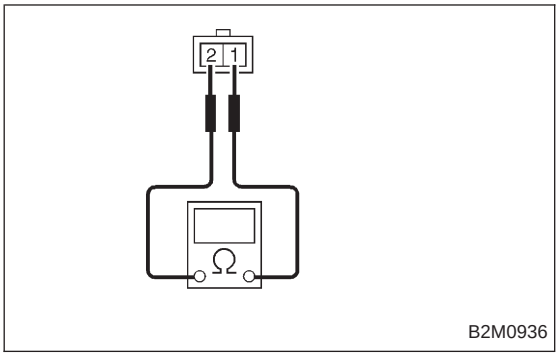

2) Disconnect connector from fuel sub meter unit.
3) Measure resistance between connector terminals of fuel sub meter unit.

CHECK : ***Terminals***
No. 1 — No. 2:
Is the resistance less than 100 Ω?

YES : Go to step **10BA6**.

NO : Replace fuel sub meter unit.

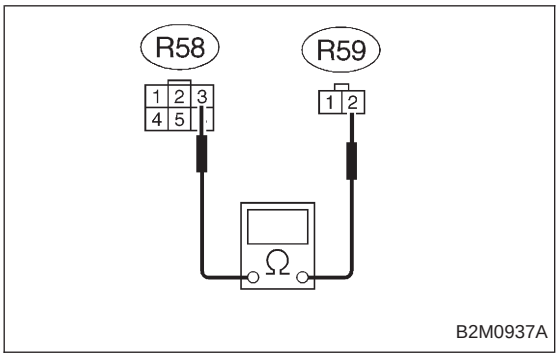

10BA6	**CHECK HARNESS BETWEEN FUEL PUMP AND FUEL SUB METER UNIT CONNECTOR.**

Measure resistance of harness between fuel pump and fuel sub meter unit connector.

CHECK : ***Connector & terminal***
(R58) No. 3 — (R59) No. 2:
Is the resistance less than 1 Ω?

YES : Go to step **10BA7**.

NO : Repair open circuit in harness between fuel pump and fuel sub meter unit connector.

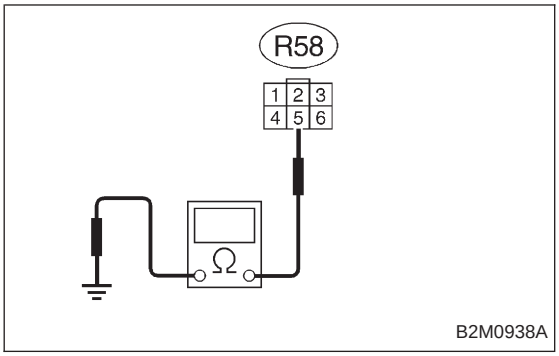

10BA7	CHECK GROUND CIRCUIT OF FUEL LEVEL SENSOR.

Measure resistance of harness between fuel pump connector and chassis ground.

CHECK : ***Connector & terminal (R58) No. 5 — Chassis ground: Is the resistance less than 5 Ω?***

YES : Go to step **10BA8**.

NO : Repair harness and connector.

NOTE:
In this case, repair the following:
- Open circuit in harness between fuel pump connector and chassis grounding terminal
- Poor contact in fuel pump connector
- Poor contact in coupling connectors (R57, B98 and B22)

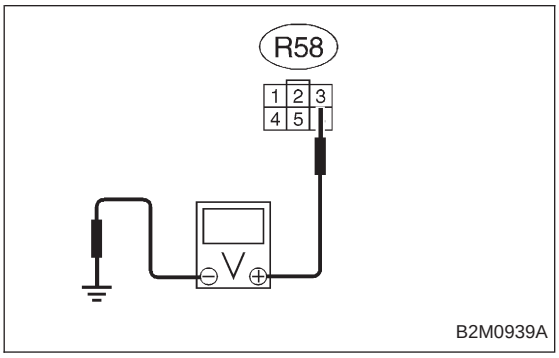

10BA8	CHECK HARNESS BETWEEN ECM AND FUEL PUMP CONNECTOR.

1) Connect connector to fuel sub meter unit.
2) Turn ignition switch to ON.
3) Measure voltage between fuel pump connector and chassis ground.

CHECK : ***Connector & terminal (R58) No. 3 (+) — Chassis ground (−): Is the voltage less than 1 V?***

YES : Repair harness and connector.

NOTE:
In this case, repair the following:
- Open circuit in harness between fuel pump connector and junction A on rear wiring harness
- Poor contact in fuel sub meter unit connector
- Poor contact in fuel pump connector
- Poor contact in coupling connector (R57)

NO : Go to next step 4).

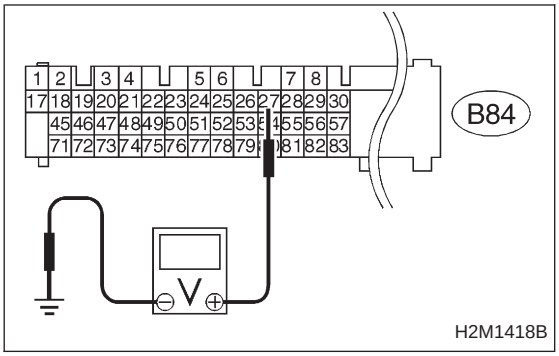

4) Turn ignition switch to OFF.
5) Disconnect connector from ECM.
6) Turn ignition switch to ON.
7) Measure voltage between ECM connector and chassis ground.

CHECK : ***Connector & terminal (B84) No. 27 (+) — Chassis ground: Is the voltage less than 1 V?***

YES : Repair harness and connector.

NOTE:
In this case, repair the following:
- Open circuit in harness between ECM connector and junction A on rear wiring harness
- Poor contact in coupling connector (B98)

NO : Repair connector.

NOTE:
In this case, repair the following:
- Poor contact in fuel pump connector
- Poor contact in fuel sub meter unit
- Poor contact in ECM connector

OBD	(FB1)
P0500	<VSP>

OBD0340

BB: DTC P0500 — VEHICLE SPEED SENSOR MALFUNCTION —

DTC DETECTING CONDITION:

- Immediately at fault recognition

WIRING DIAGRAM:

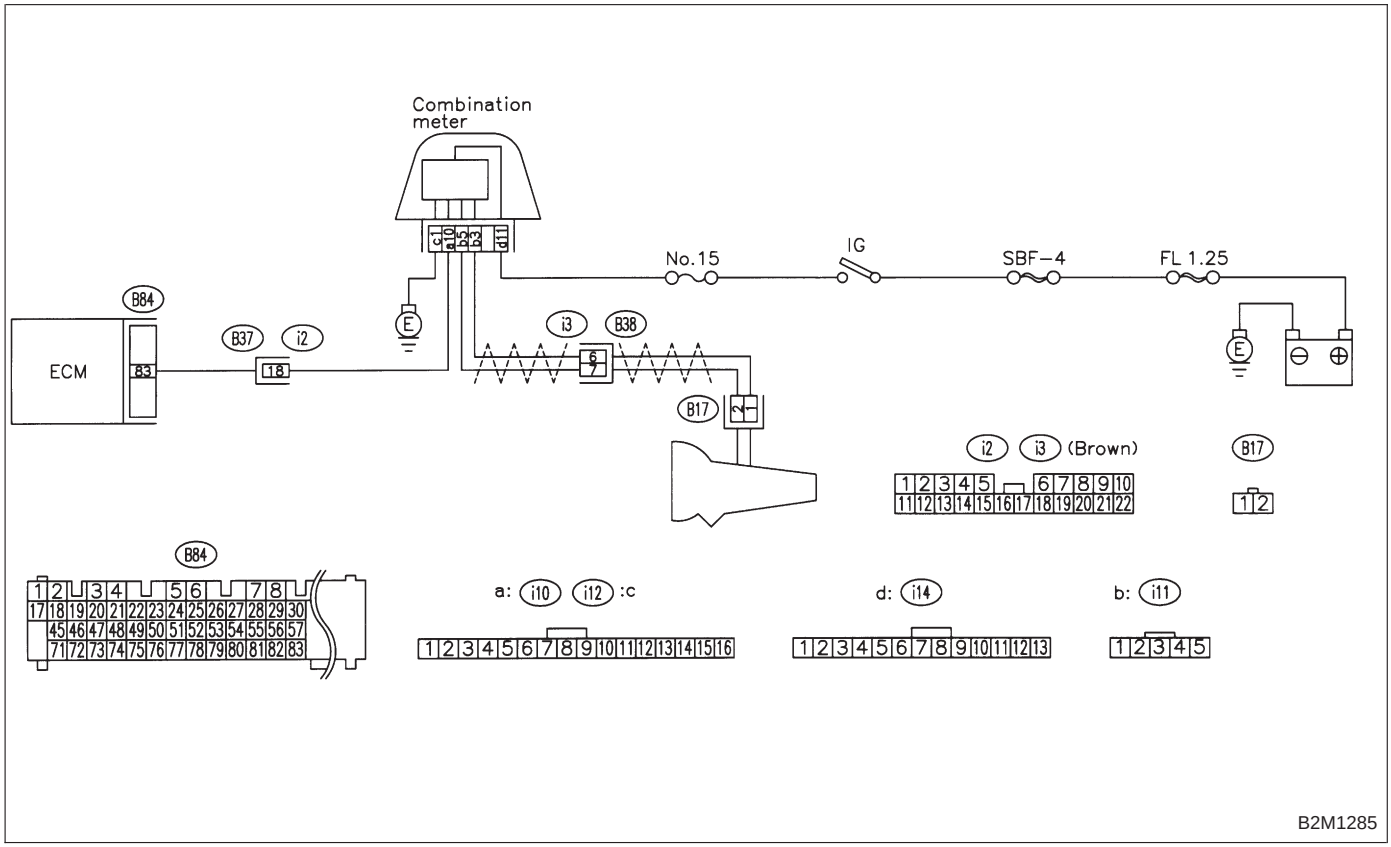

CAUTION:
After repair or replacement of faulty parts, conduct CLEAR MEMORY and INSPECTION MODES.
<Ref. to 2-7 [T3D0] and [T3E0].>

10BB1	CHECK SPEEDOMETER OPERATION IN COMBINATION METER.

CHECK : ***Does speedometer operate normally?***

YES : Go to step **10BB2**.

NO : Check speedometer and vehicle speed sensor <Ref. to 6-2 [K3A0].>.

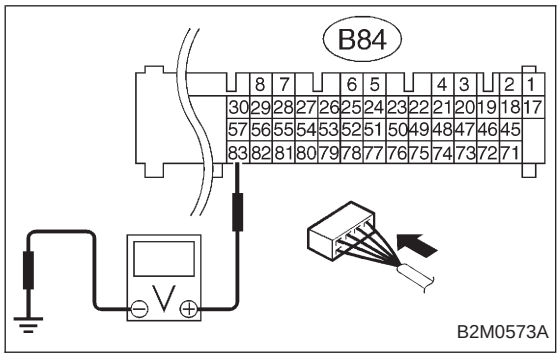

10BB2	CHECK HARNESS BETWEEN ECM AND COMBINATION METER CONNECTOR.

1) Turn ignition switch to OFF.
2) Disconnect connector from TCM.
3) Turn ignition switch to ON.
4) Measure voltage between ECM and chassis ground.

CHECK : ***Connector & terminal***
(B84) No. 83 (+) — Chassis ground (−):
Is the voltage more than 2 V?

YES : Repair harness and connector.

NOTE:
In this case, repair the following:
- Open circuit in harness between ECM and combination meter connector
- Poor contact in ECM connector
- Poor contact in combination meter connector
- Poor contact in coupling connector (B37)

NO : Go to step **10BB3**.

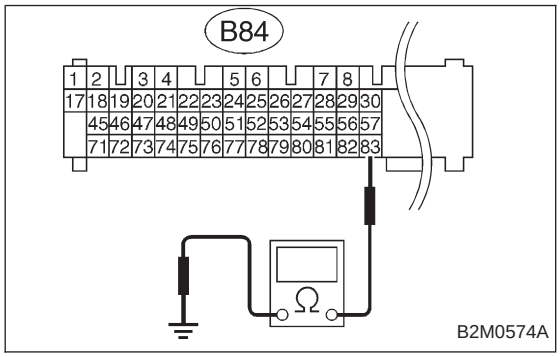

10BB3	CHECK HARNESS BETWEEN ECM AND COMBINATION METER CONNECTOR.

1) Turn ignition switch to OFF.
2) Disconnect connector from ECM.
3) Measure resistance of harness between ECM connector and chassis ground.

CHECK : ***Connector & terminal***
(B84) No. 83 — Chassis ground:
Is the resistance less than 10 Ω?

YES : Repair ground short circuit in harness between ECM and combination meter connector.

NO : Repair poor contact in ECM connector.

OBD	(FB1)
P0505	<ISC>

OBD0358

BC: DTC P0505 — IDLE CONTROL SYSTEM MALFUNCTION —

DTC DETECTING CONDITION:

- Immediately at fault recognition

TROUBLE SYMPTOM:

- Erroneous idling
- Engine stalls.
- Engine breathing

WIRING DIAGRAM:

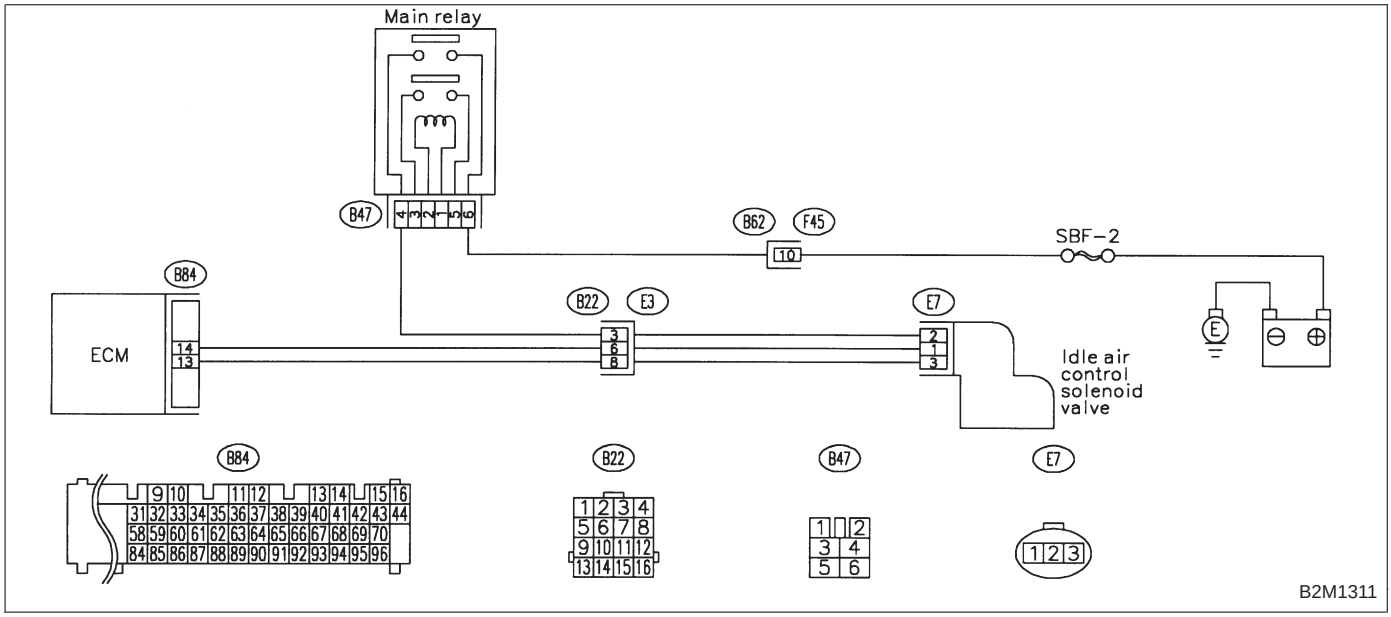

CAUTION:
After repair or replacement of faulty parts, conduct CLEAR MEMORY and INSPECTION MODES.
<Ref. to 2-7 [T3D0] and [T3E0].>

10BC1	CHECK AIR INTAKE SYSTEM.

1) Turn ignition switch to ON.
2) Start engine, and idle it.

CHECK : ***Is there a fault in air intake system?***

NOTE:
Check the following items.
- Loose installation of intake manifold, idle air control solenoid valve and throttle body
- Cracks of intake manifold gasket, idle air control solenoid valve gasket and throttle body gasket
- Loose connections and cracks of idle air control solenoid valve by-pass hoses
- Disconnections of vacuum hoses

YES : Repair or replace air intake system.

NO : Go to step **10BC2**.

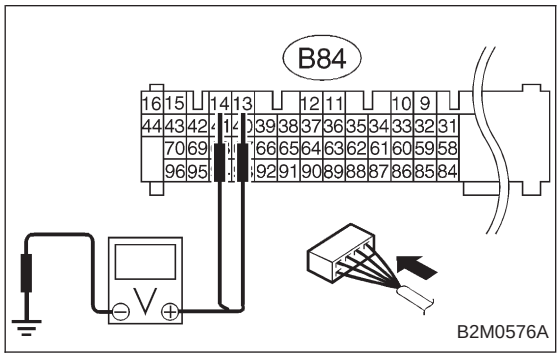

10BC2	CHECK OUTPUT SIGNAL FROM ECM.

1) Turn ignition switch to ON.
2) Measure voltage between ECM and chassis ground.

CHECK : ***Connector & terminal (B84) No. 13 (+) — Chassis ground (−): Is the voltage more than 3 V?***

YES : Go to next CHECK .

NO : Go to step **10BC4**.

CHECK : ***Connector & terminal (B84) No. 14 (+) — Chassis ground (−): Is the voltage more than 3 V?***

YES : Go to next step 3).

NO : Go to step **10BC4**.

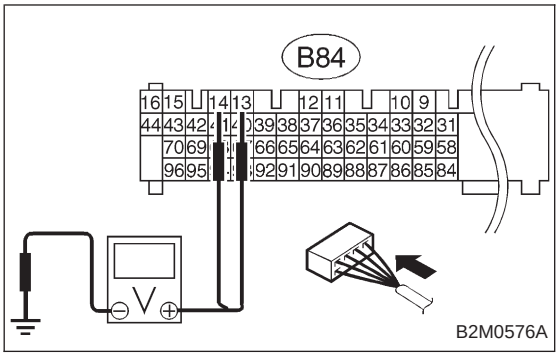

3) Turn ignition switch to OFF.
4) Disconnect connector from idle air control solenoid valve.
5) Turn ignition switch to ON.
6) Measure voltage between ECM and chassis ground.

CHECK : ***Connector & terminal (B84) No. 13 (+) — Chassis ground (−): Is the voltage more than 10 V?***

YES : Repair battery short circuit in harness between ECM and idle air control solenoid valve connector. After repair, replace ECM.

NO : Go to next CHECK .

CHECK : ***Connector & terminal (B84) No. 14 (+) — Chassis ground (−): Is the voltage more than 10 V?***

YES : Repair battery short circuit in harness between ECM and idle air control solenoid valve connector. After repair, replace ECM.

NO : Go to next CHECK .

CHECK : ***Is there poor contact in ECM connector?***

YES : Repair poor contact in ECM connector.

NO : Go to step **10BC3**.

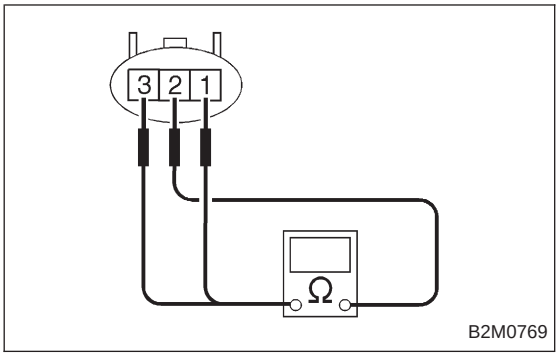

10BC3	CHECK IDLE AIR CONTROL SOLENOID VALVE.

1) Turn ignition switch to OFF.
2) Measure resistance between idle air control solenoid valve connector terminals.

CHECK : ***Terminals No. 1 — No. 2: Is the resistance more than 20 Ω?***

YES : Replace idle air control solenoid valve.

NO : Go to next CHECK .

CHECK : ***Terminals No. 2 — No. 3: Is the resistance more than 20 Ω?***

YES : Replace idle air control solenoid valve.

NO : Go to next CHECK .

CHECK : ***Terminals No. 1 — No. 2: Is the resistance less than 5 Ω?***

YES : Replace idle air control solenoid valve and ECM.

NO : Go to next CHECK .

CHECK : ***Terminals No. 2 — No. 3: Is the resistance less than 5 Ω?***

YES : Replace idle air control solenoid valve and ECM.

NO : Go to next step 3).

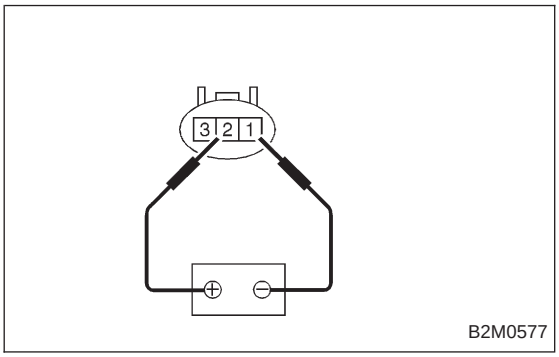

3) Remove idle air control solenoid valve. <Ref. to 2-7 [W12A0].>
4) Check operation of idle air control solenoid valve.

CHECK : ***Is idle air control solenoid valve fully opened when applying the battery to terminals No. 2 (+) and No. 1 (−)?***

YES : Go to next CHECK .

NO : Clean idle air control solenoid valve. <Ref. to 2-7 [W12B0].>

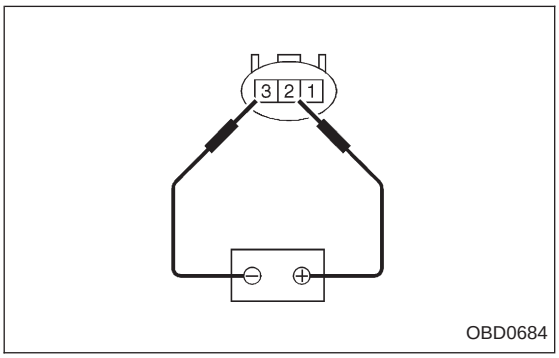

CHECK : ***Is idle air control solenoid valve fully closed when applying the battery to terminals No. 2 (+) and No. 3 (−)?***

YES : Go to step **10BC4**.

NO : Clean idle air control solenoid valve. <Ref. to 2-7 [W12B0].>

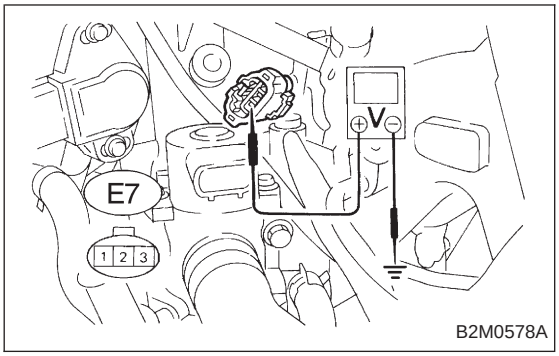

10BC4	CHECK POWER SUPPLY TO IDLE AIR CONTROL SOLENOID VALVE.

1) Turn ignition switch to OFF.
2) Disconnect connector from idle air control solenoid valve.
3) Turn ignition switch to ON.
4) Measure voltage between idle air control solenoid valve and engine ground.

CHECK : ***Connector & terminal (E7) No. 2 (+) — Engine ground (−): Is the voltage more than 10 V?***

YES : Go to step **10BC5**.

NO : Repair open circuit in harness between idle air control solenoid valve and main relay connector.

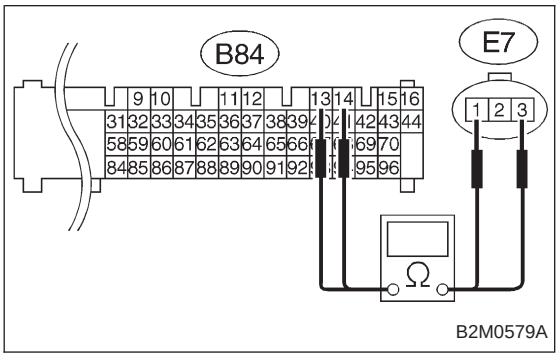

10BC5	CHECK HARNESS BETWEEN ECM AND IDLE AIR CONTROL SOLENOID VALVE CONNECTOR.

1) Turn ignition switch to OFF.
2) Disconnect connector from ECM.
3) Measure resistance of harness between ECM and idle air control solenoid valve connector.

CHECK : ***Connector & terminal (B84) No. 14 — (E7) No. 1: Is the resistance less than 1 Ω?***

YES : Go to next CHECK .

NO : Repair open circuit in harness between ECM and idle air control solenoid valve connector.

CHECK : ***Connector & terminal (B84) No. 13 — (E7) No. 3: Is the resistance less than 1 Ω?***

YES : Go to next step 4).

NO : Repair open circuit in harness between ECM and idle air control solenoid valve connector.

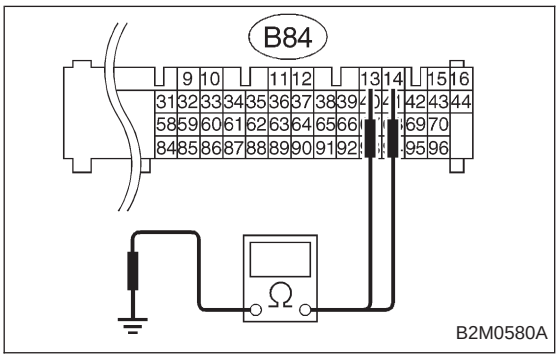

4) Measure resistance of harness between ECM and chassis ground.

CHECK : ***Connector & terminal (B84) No. 13 — Chassis ground: Is the resistance less than 10 Ω?***

YES : Repair ground short circuit in harness between ECM and idle air control solenoid valve connector.

NO : Go to next CHECK .

CHECK : ***Connector & terminal (B84) No. 14 — Chassis ground: Is the resistance less than 10 Ω?***

YES : Repair ground short circuit in harness between ECM and idle air control solenoid valve connector.

NO : Go to next CHECK .

CHECK : ***Is there poor contact in idle air control solenoid valve connector?***

YES : Repair poor contact in idle air control solenoid valve connector.

NO : Contact with SOA service.

NOTE:
Inspection by DTM is required, because probable cause is deterioration of multiple parts.

OBD (FB1)

P0506 <ISC_RLOW>

B2M1104

BD: DTC P0506 — IDLE CONTROL SYSTEM RPM LOWER THAN EXPECTED —

DTC DETECTING CONDITION:

- Two consecutive driving cycles with fault

TROUBLE SYMPTOM:

- Engine is difficult to start.
- Engine does not start.
- Erroneous idling
- Engine stalls.

WIRING DIAGRAM:

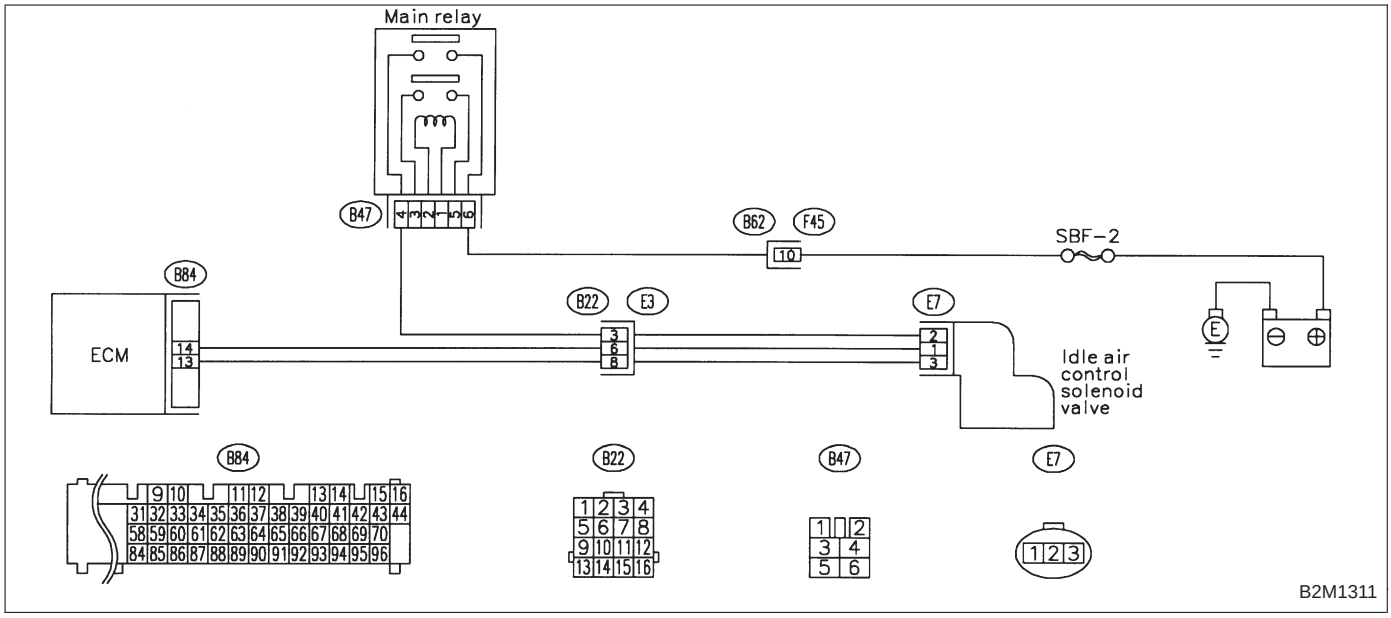

CAUTION:
After repair or replacement of faulty parts, conduct CLEAR MEMORY and INSPECTION MODES.
<Ref. to 2-7 [T3D0] and [T3E0].>

10BD1	CHECK DTC P0505 ON DISPLAY.

CHECK : ***Does the Subaru select monitor or OBD-II general scan tool indicate DTC P0505?***

YES : Inspect DTC P0505 using “10. Diagnostics Chart with Trouble Code”. <Ref. to 2-7 [T10A0].>

NOTE:
In this case, it is not necessary to inspect DTC P0506.

NO : Go to step **10BD2**.

10BD2	CHECK AIR INTAKE SYSTEM.

1) Turn ignition switch to ON.
2) Start engine, and idle it.

CHECK : ***Is clogging the by-pass line between by-pass hose and intake duct?***

YES : Repair the by-pass line.

NO : Replace idle air control solenoid valve.

OBD (FB1)

P0507 <ISC_RHI>

B2M1105

BE: DTC P0507 — IDLE CONTROL SYSTEM RPM HIGHER THAN EXPECTED —

DTC DETECTING CONDITION:

- Two consecutive driving cycles with fault

TROUBLE SYMPTOM:

- Engine keeps running at higher revolution than specified idling revolution.

WIRING DIAGRAM:

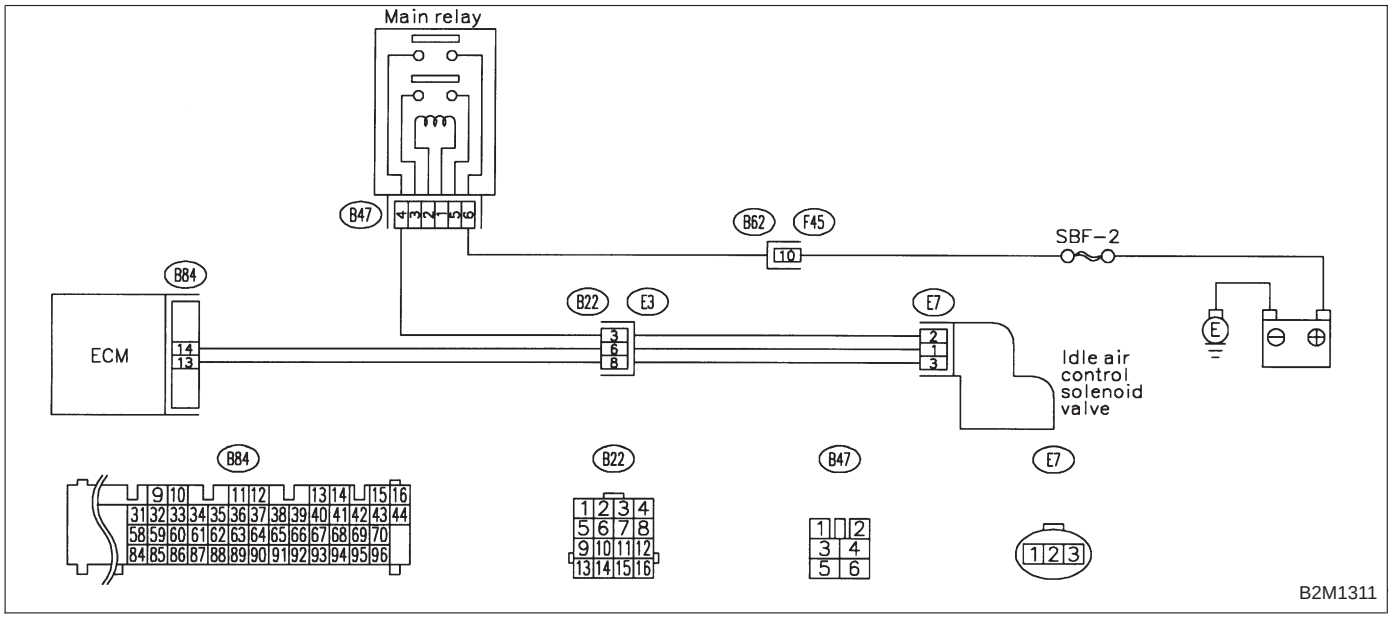

CAUTION:
After repair or replacement of faulty parts, conduct CLEAR MEMORY and INSPECTION MODES.
<Ref. to 2-7 [T3D0] and [T3E0].>

10BE1	CHECK DTC P0505 ON DISPLAY.

CHECK : ***Does the Subaru select monitor or OBD-II general scan tool indicate DTC P0505?***

YES : Inspect DTC P0505 using “10. Diagnostics Chart with Trouble Code”. <Ref. to 2-7 [T10A0].>

NOTE:
In this case, it is not necessary to inspect DTC P0507.

NO : Go to step **10BE2**.

10BE2	CHECK AIR INTAKE SYSTEM.

1) Turn ignition switch to ON.
2) Start engine, and idle it.

CHECK : ***Is there a fault in air intake system?***

NOTE:
Check the following items.
- Loose installation of intake manifold, idle air control solenoid valve and throttle body
- Cracks of intake manifold gasket, idle air control solenoid valve gasket and throttle body gasket
- Loose connections and cracks of idle air control solenoid valve by-pass hoses
- Disconnections of vacuum hoses

YES : Repair air suction and leaks.

NO : Replace idle air control solenoid valve.

BF: DTC P0600 — SERIAL COMMUNICATION LINK MALFUNCTION —

DTC DETECTING CONDITION:

- Two consecutive driving cycles with fault

WIRING DIAGRAM:

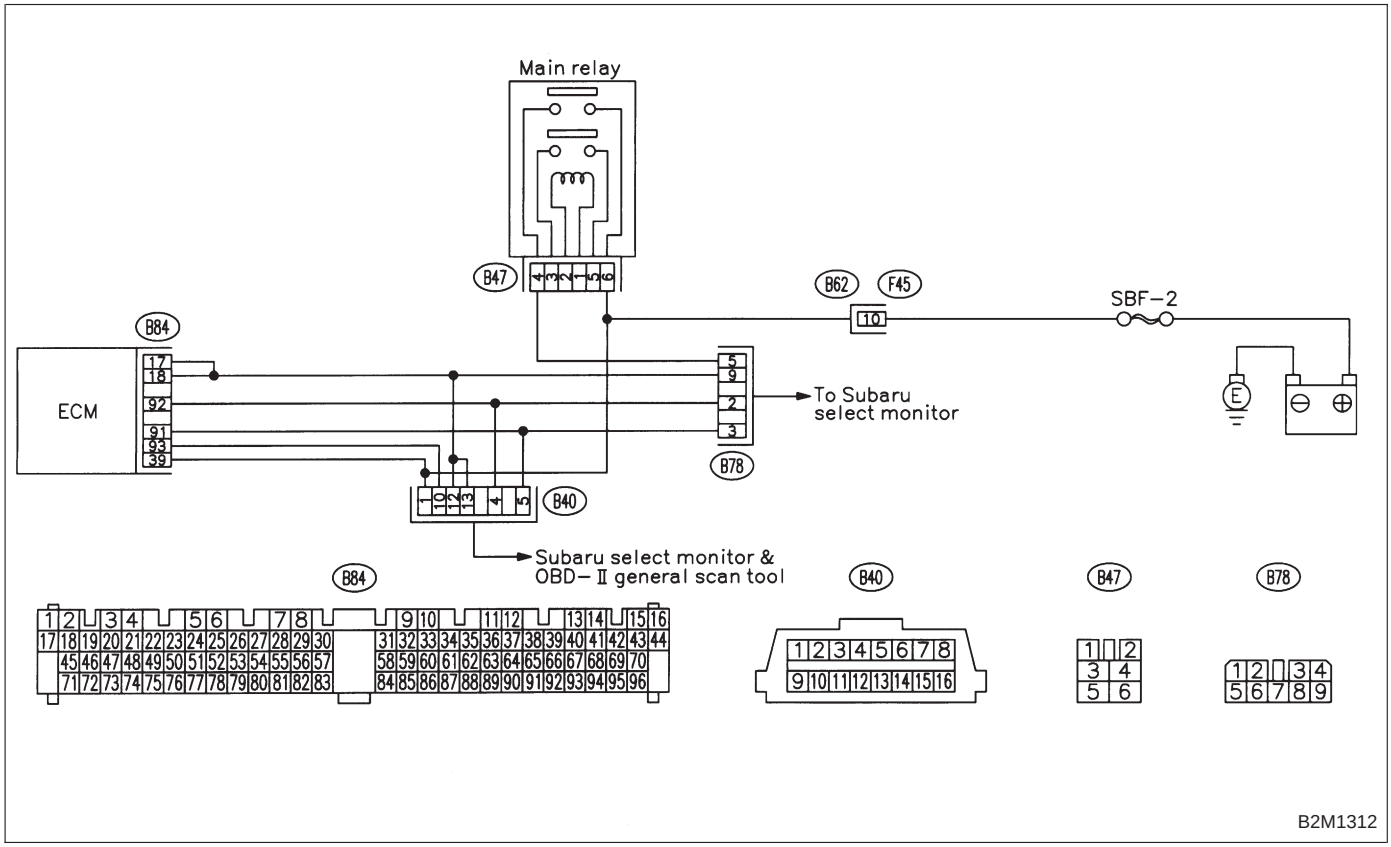

CAUTION:
After repair or replacement of faulty parts, conduct CLEAR MEMORY and INSPECTION MODES.
<Ref. to 2-7 [T3D0] and [T3E0].>

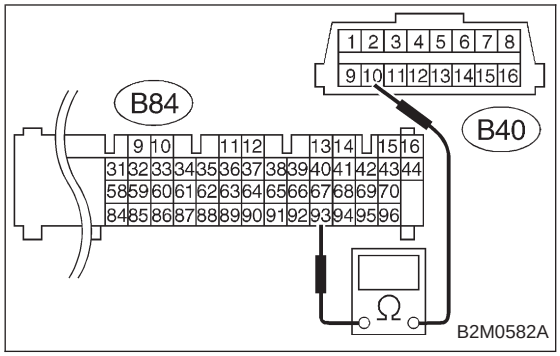

10BF1	CHECK HARNESS BETWEEN ECM AND DATA LINK CONNECTOR.

1) Turn ignition switch to OFF.
2) Disconnect connector from ECM.
3) Measure resistance of harness between ECM and data link connector (for Subaru Select Monitor & OBD-II general scan tool).

CHECK : ***Connector & terminal (B84) No. 93 — (B40) No. 10: Is the resistance less than 1 Ω?***

YES : Go to next step 4).

NO : Repair open circuit in harness between ECM and data link connector.

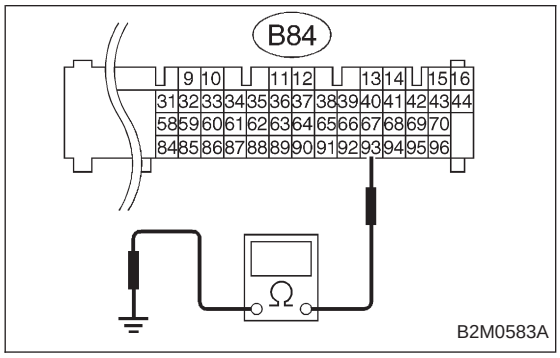

4) Measure resistance of harness between ECM and chassis ground.

CHECK : ***Connector & terminal (B84) No. 93 — Chassis ground: Is the resistance less than 10 Ω?***

YES : Repair ground short circuit in harness between ECM and data link connector.

NO : Repair poor contact in ECM connector and data link connector.

OBD	(FB1)
P0601	<RAM>

OBD0376

BG: DTC P0601 — INTERNAL CONTROL MODULE MEMORY CHECK SUM ERROR —

DTC DETECTING CONDITION:

- Two consecutive driving cycles with fault

TROUBLE SYMPTOM:

- Engine does not start.
- Engine stalls.

WIRING DIAGRAM:

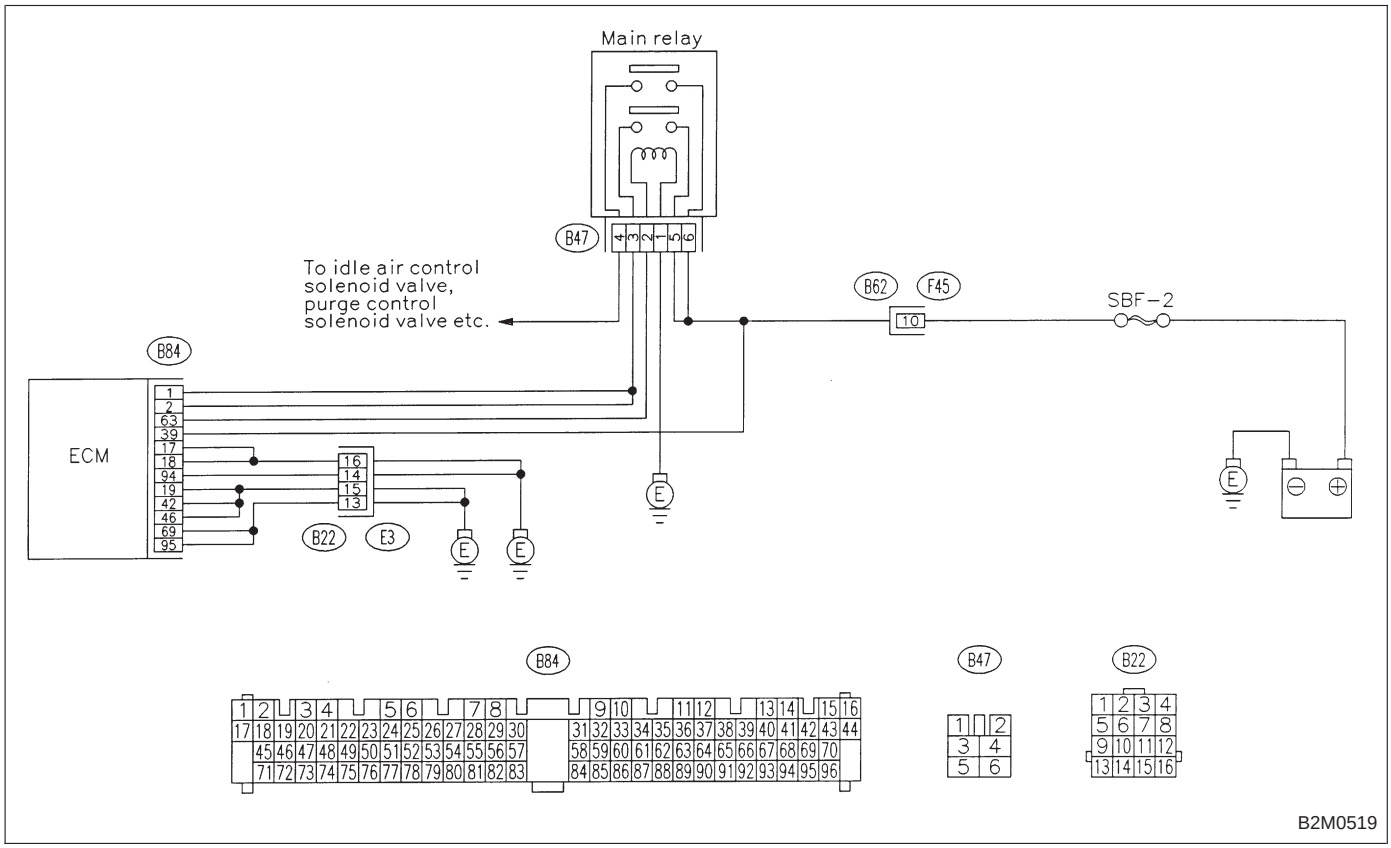

B2M0519

CAUTION:
After repair or replacement of faulty parts, conduct CLEAR MEMORY and INSPECTION MODES.
<Ref. to 2-7 [T3D0] and [T3E0].>

10BG1	CHECK DTC P0601 ON DISPLAY.

CHECK : ***Does the Subaru select monitor or OBD-II general scan tool indicate DTC P0601?***

YES : Replace ECM.

NO : It is not necessary to inspect DTC P0601.

OBD (FB1)
P0703 <ATBRK>
B2M0655

BH: DTC P0703
— BRAKE SWITCH INPUT MALFUNCTION —

DTC DETECTING CONDITION:

- Two consecutive driving cycles with fault

WIRING DIAGRAM:

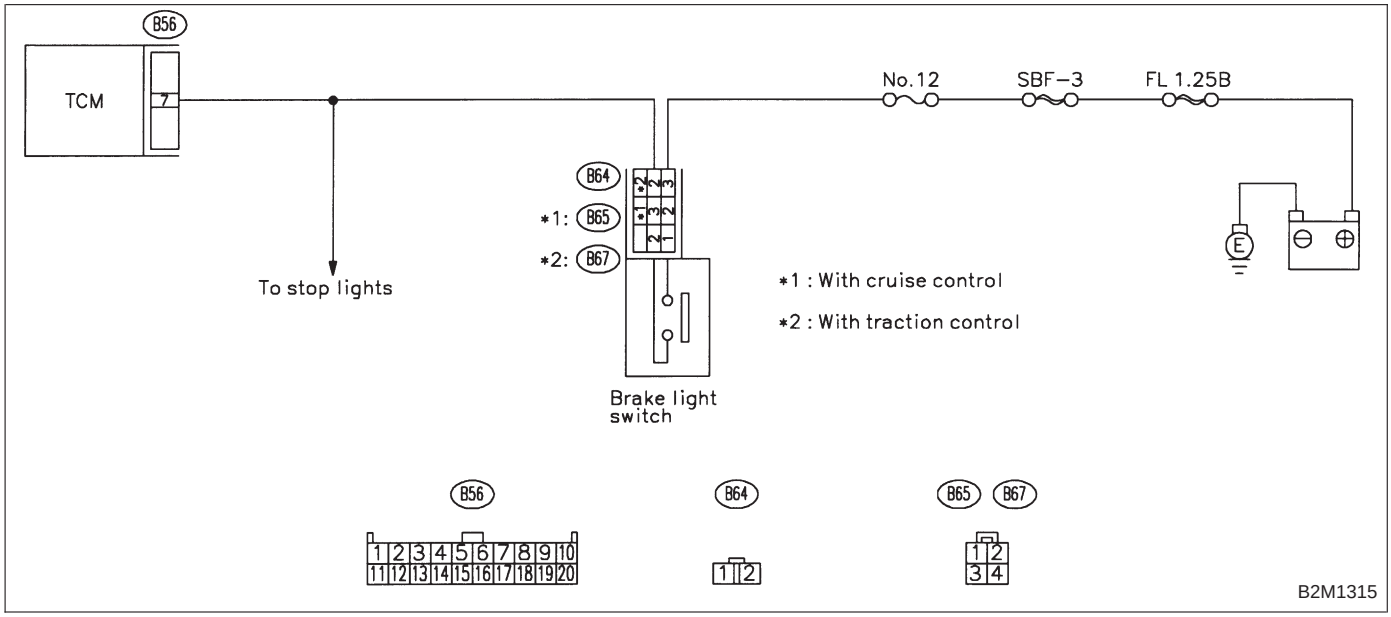

CAUTION:
After repair or replacement of faulty parts, conduct CLEAR MEMORY and INSPECTION MODES.
<Ref. to 2-7 [T3D0] and [T3E0].>

10BH1	CHECK OPERATION OF BRAKE LIGHT.

CHECK : ***Does brake light come on when depressing the brake pedal?***

YES : Go to step **10BH2**.

NO : Repair or replace brake light circuit.

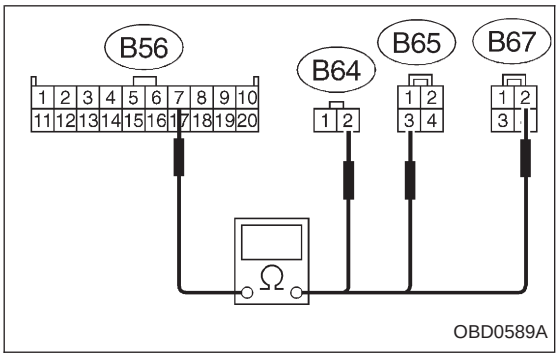

10BH2	CHECK HARNESS BETWEEN TCM AND BRAKE LIGHT SWITCH CONNECTOR.

1) Disconnect connectors from TCM and brake light switch.
2) Measure resistance of harness between TCM and brake light switch connector.

CHECK : ***Connector & terminal***
(B56) No. 7 — (B64) No. 2:
(B56) No. 7 — (B65) No. 3 (With cruise control):
(B56) No. 7 — (B67) No. 2 (With traction control):
Is the resistance less than 1 Ω?

YES : Go to next step 3).

NO : Repair or replace harness and connector.

NOTE:
In this case, repair the following:
- Open circuit in harness between TCM and brake light switch connector
- Poor contact in TCM connector
- Poor contact in brake light switch connector

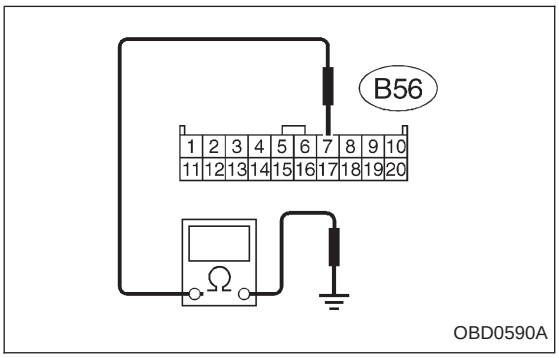

3) Measure resistance of harness between TCM and chassis ground.

CHECK : ***Connector & terminal***
(B56) No. 7 — Chassis ground:
Is the resistance more than 1 MΩ?

YES : Go to step **10BH3**.

NO : Repair ground short circuit in harness between TCM and brake light switch connector.

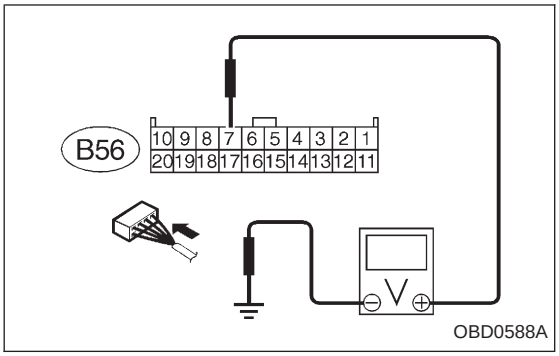

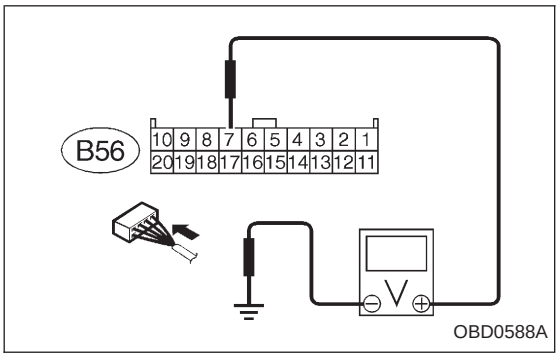

10BH3	CHECK INPUT SIGNAL FOR TCM.

1) Connect connectors to TCM and brake light switch.
2) Measure voltage between TCM and chassis ground.

CHECK : ***Connector & terminal (B56) No. 7 (+) — Chassis ground (−): Is the voltage less than 1 V when releasing the brake pedal?***

YES : Go to next CHECK .

NO : Adjust or replace brake light switch.

CHECK : ***Connector & terminal (B56) No. 7 (+) — Chassis ground (−): Is the voltage more than 10 V when depressing the brake pedal?***

YES : Go to next CHECK .

NO : Adjust or replace brake light switch.

CHECK : ***Is there poor contact in TCM connector?***

YES : Repair poor contact in TCM connector.

NO : Replace TCM.

OBD (FB1)

P0705 <ATRNG>

B2M0656

BI: DTC P0705 — TRANSMISSION RANGE SENSOR CIRCUIT MALFUNCTION —

DTC DETECTING CONDITION:

- Two consecutive driving cycles with fault

TROUBLE SYMPTOM:

- Starter does not rotate when selector lever is in “P” or “N” range.
- Starter rotates when selector lever is in “R”, “D”, “3”, “2” or “1” range.
- Engine brake is not effected when selector lever is in “3” range.
- Shift characteristics are erroneous.

WIRING DIAGRAM:

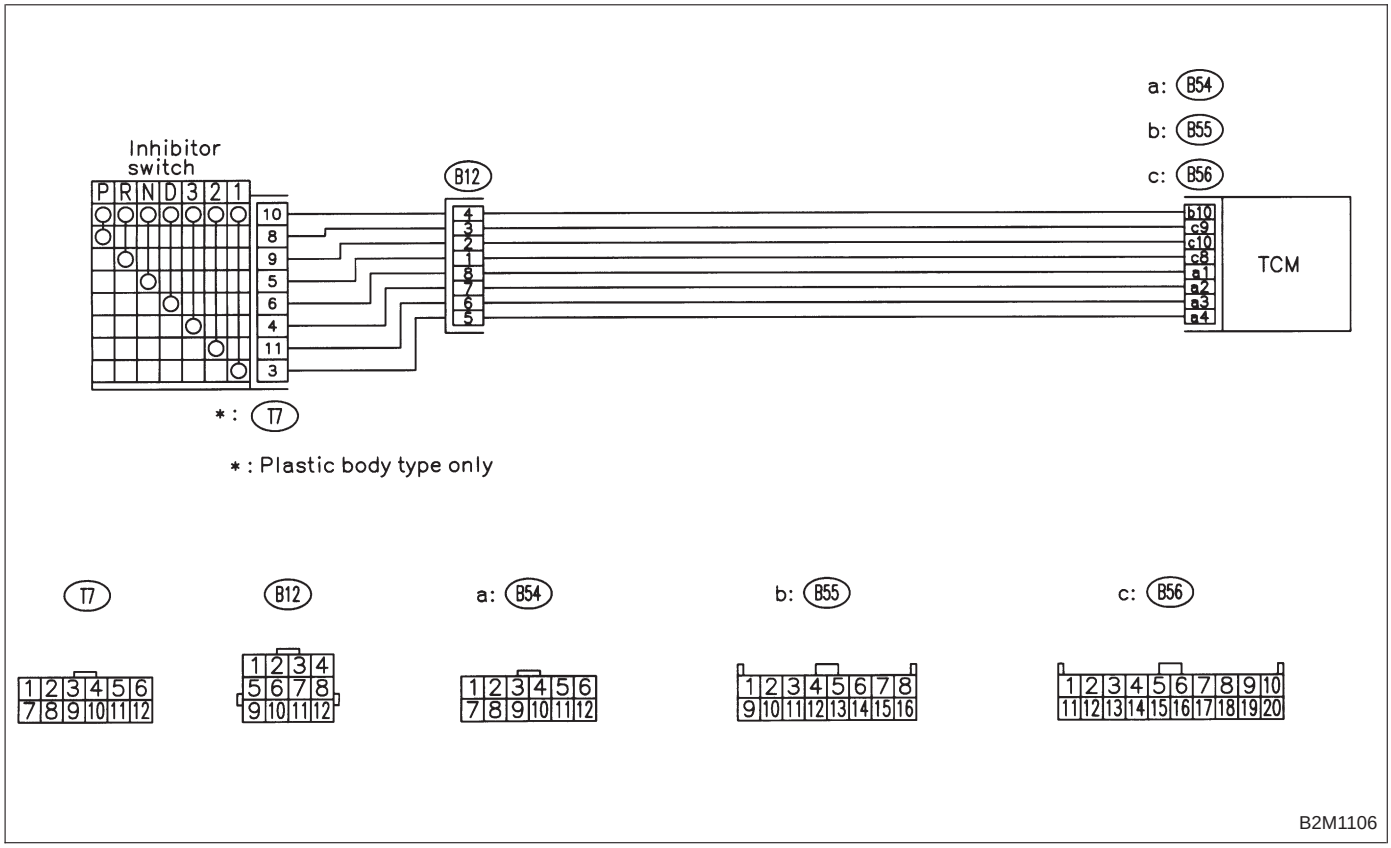

B2M1106

CAUTION:
After repair or replacement of faulty parts, conduct CLEAR MEMORY and INSPECTION MODES.
<Ref. to 2-7 [T3D0] and [T3E0].>

10BI1	CHECK INHIBITOR SWITCH TYPE.

CHECK : ***Is inhibitor switch type plastic body?***

YES : Go to step **10BI2**.

NO : Go to step **10BI4**.

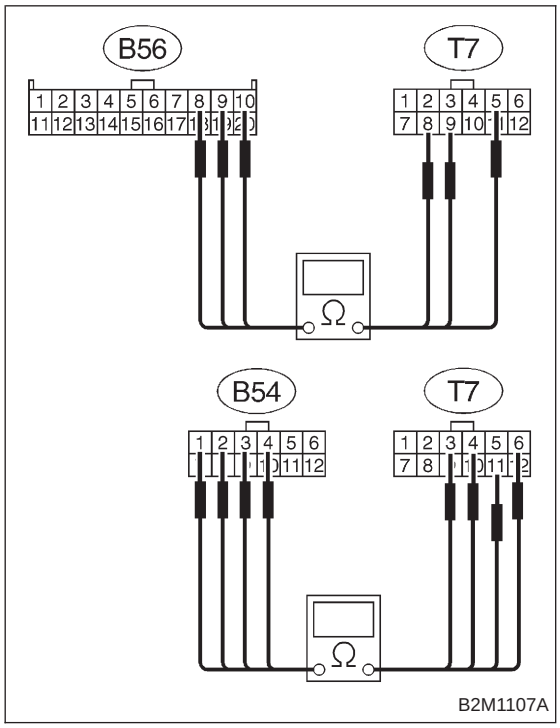

10BI2	CHECK HARNESS BETWEEN TCM AND INHIBITOR SWITCH CONNECTOR.

1) Turn ignition switch to OFF.
2) Disconnect connectors from TCM and transmission.
3) Measure resistance of harness between TCM and transmission harness connector.

CHECK : ***Connector & terminal***
(B56) No. 9 — (T7) No. 8:
Is the resistance less than 1 Ω?

YES : Go to next CHECK .

NO : Repair harness and connector.

NOTE:
In this case, repair the following:
- Open circuit in harness between ECM and inhibitor switch connector
- Poor contact in coupling connector (B12)

CHECK : ***Connector & terminal***
(B56) No. 10 — (T7) No. 9:
Is the resistance less than 1 Ω?

YES : Go to next CHECK .

NO : Repair harness and connector.

NOTE:
In this case, repair the following:
- Open circuit in harness between ECM and inhibitor switch connector
- Poor contact in coupling connector (B12)

CHECK : ***Connector & terminal***
(B56) No. 8 — (T7) No. 5:
Is the resistance less than 1 Ω?

YES : Go to next CHECK .

NO : Repair harness and connector.

NOTE:
In this case, repair the following:
- Open circuit in harness between ECM and inhibitor switch connector.
- Poor contact in coupling connector (B12)

CHECK : ***Connector & terminal (B54) No. 1 — (T7) No. 6: Is the resistance less than 1 Ω?***

YES : Go to next CHECK .

NO : Repair harness and connector.

NOTE:
In this case, repair the following:
- Open circuit in harness between ECM and inhibitor switch connector
- Poor contact in coupling connector (B12)

CHECK : ***Connector & terminal (B54) No. 2 — (T7) No. 4: Is the resistance less than 1 Ω?***

YES : Go to next CHECK .

NO : Repair harness and connector.

NOTE:
In this case, repair the following:
- Open circuit in harness between ECM and inhibitor switch connector
- Poor contact in coupling connector (B12)

CHECK : ***Connector & terminal (B54) No. 3 — (T7) No. 11: Is the resistance less than 1 Ω?***

YES : Go to next CHECK .

NO : Repair harness and connector.

NOTE:
In this case, repair the following:
- Open circuit in harness between ECM and inhibitor switch connector
- Poor contact in coupling connector (B12)

CHECK : ***Connector & terminal (B54) No. 4 — (T7) No. 3: Is the resistance less than 1 Ω?***

YES : Go to next step 4).

NO : Repair harness and connector.

NOTE:
In this case, repair the following:
- Open circuit in harness between ECM and inhibitor switch connector
- Poor contact in coupling connector (B12)

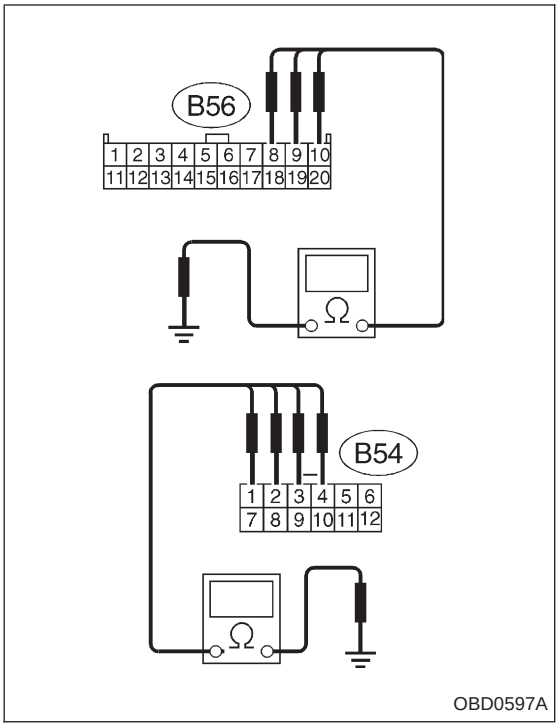

4) Measure resistance of harness between TCM and chassis ground.

CHECK : ***Connector & terminal (B56) No. 9 — Chassis ground: Is the resistance more than 1 MΩ?***

YES : Go to next CHECK .

NO : Repair ground short circuit in harness between TCM and transmission harness connector.

CHECK : ***Connector & terminal (B56) No. 10 — Chassis ground: Is the resistance more than 1 MΩ?***

YES : Go to next CHECK .

NO : Repair ground short circuit in harness between TCM and transmission harness connector.

CHECK : ***Connector & terminal (B56) No. 8 — Chassis ground: Is the resistance more than 1 MΩ?***

YES : Go to next CHECK .

NO : Repair ground short circuit in harness between TCM and transmission harness connector.

CHECK : ***Connector & terminal (B54) No. 1 — Chassis ground: Is the resistance more than 1 MΩ?***

YES : Go to next CHECK .

NO : Repair ground short circuit in harness between TCM and transmission harness connector.

CHECK : ***Connector & terminal (B54) No. 2 — Chassis ground: Is the resistance more than 1 MΩ?***

YES : Go to next CHECK .

NO : Repair ground short circuit in harness between TCM and transmission harness connector.

CHECK : ***Connector & terminal (B54) No. 3 — Chassis ground: Is the resistance more than 1 MΩ?***

YES : Go to next CHECK .

NO : Repair ground short circuit in harness between TCM and transmission harness connector.

CHECK : ***Connector & terminal (B54) No. 4 — Chassis ground: Is the resistance more than 1 MΩ?***

YES : Go to step **10BI3**.

NO : Repair ground short circuit in harness between TCM and transmission harness connector.

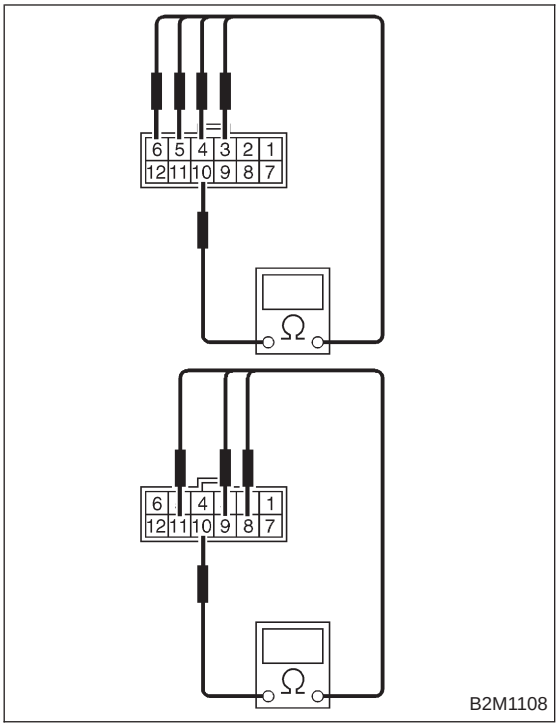

10BI3	CHECK INHIBITOR SWITCH.

Measure resistance between inhibitor switch connector receptacle's terminals.

CHECK : ***Terminals***
No. 8 — No. 10
- ***Is the resistance less than 1 Ω in "P" position?***
- ***Is the resistance more than 1 MΩ in other positions?***

YES : Go to next CHECK .
NO : Go to CHECK1 .

CHECK : ***Terminals***
No. 9 — No. 10
- ***Is the resistance less than 1 Ω in "R" position?***
- ***Is the resistance more than 1 MΩ in other positions?***

YES : Go to next CHECK .
NO : Go to CHECK1 .

CHECK : ***Terminals***
No. 5 — No. 10
- ***Is the resistance less than 1 Ω in "N" position?***
- ***Is the resistance more than 1 MΩ in other positions?***

YES : Go to next CHECK .
NO : Go to CHECK1 .

CHECK : ***Terminals***
No. 6 — No. 10
- ***Is the resistance less than 1 Ω in "D" position?***
- ***Is the resistance more than 1 MΩ in other positions?***

YES : Go to next CHECK .
NO : Go to CHECK1 .

CHECK : ***Terminals***
No. 4 — No. 10
- ***Is the resistance less than 1 Ω in "3" position?***
- ***Is the resistance more than 1 MΩ in other positions?***

YES : Go to next CHECK .
NO : Go to CHECK1 .

CHECK ***: Terminals***
No. 11 — No. 10
● Is the resistance less than 1 Ω in "2" position?
● Is the resistance more than 1 MΩ in other positions?

YES : Go to next CHECK .

NO : Go to CHECK1 .

CHECK ***: Terminals***
No. 3 — No. 10
● Is the resistance less than 1 Ω in "1" position?
● Is the resistance more than 1 MΩ in other positions?

YES : Go to step **10BI6**.

NO : Go to CHECK1 .

CHECK1 ***: Is there faulty connection in the selector cable?***

YES : Repair connection of selector cable.

NO : Replace inhibitor switch.

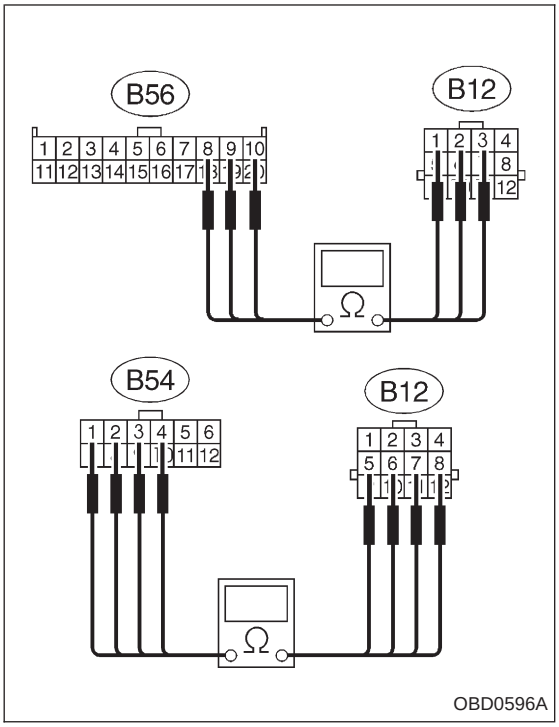

10BI4	CHECK HARNESS BETWEEN TCM AND TRANSMISSION HARNESS CONNECTOR.

1) Turn ignition switch to OFF.
2) Disconnect connectors from TCM and transmission harness connector.
3) Measure resistance of harness between TCM and transmission harness connector.

CHECK : ***Connector & terminal (B56) No. 9 — (B12) No. 3: Is the resistance less than 1 Ω?***

YES : Go to next CHECK .

NO : Repair open circuit in harness between TCM and transmission harness connector.

CHECK : ***Connector & terminal (B56) No. 10 — (B12) No. 2: Is the resistance less than 1 Ω?***

YES : Go to next CHECK .

NO : Repair open circuit in harness between TCM and transmission harness connector.

CHECK : ***Connector & terminal (B56) No. 8 — (B12) No. 1: Is the resistance less than 1 Ω?***

YES : Go to next CHECK .

NO : Repair open circuit in harness between TCM and transmission harness connector.

CHECK : ***Connector & terminal (B54) No. 1 — (B12) No. 8: Is the resistance less than 1 Ω?***

YES : Go to next CHECK .

NO : Repair open circuit in harness between TCM and transmission harness connector.

CHECK : ***Connector & terminal (B54) No. 2 — (B12) No. 7: Is the resistance less than 1 Ω?***

YES : Go to next CHECK .

NO : Repair open circuit in harness between TCM and transmission harness connector.

CHECK : ***Connector & terminal (B54) No. 3 — (B12) No. 6: Is the resistance less than 1 Ω?***

YES : Go to next CHECK .

NO : Repair open circuit in harness between TCM and transmission harness connector.

CHECK : ***Connector & terminal***
(B54) No. 4 — (B12) No. 5:
Is the resistance less than 1 Ω?

YES : Go to next step 4).

NO : Repair open circuit in harness between TCM and transmission harness connector.

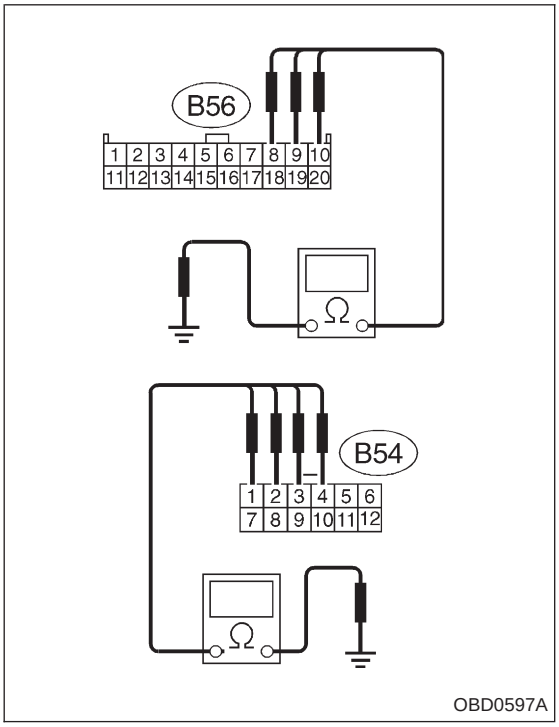

4) Measure resistance of harness between TCM and chassis ground.

CHECK : ***Connector & terminal***
(B56) No. 9 — Chassis ground:
Is the resistance more than 1 MΩ?

YES : Go to next CHECK .

NO : Repair ground short circuit in harness between TCM and transmission harness connector.

CHECK : ***Connector & terminal***
(B56) No. 10 — Chassis ground:
Is the resistance more than 1 MΩ?

YES : Go to next CHECK .

NO : Repair ground short circuit in harness between TCM and transmission harness connector.

CHECK : ***Connector & terminal***
(B56) No. 8 — Chassis ground:
Is the resistance more than 1 MΩ?

YES : Go to next CHECK .

NO : Repair ground short circuit in harness between TCM and transmission harness connector.

CHECK : ***Connector & terminal***
(B54) No. 1 — Chassis ground:
Is the resistance more than 1 MΩ?

YES : Go to next CHECK .

NO : Repair ground short circuit in harness between TCM and transmission harness connector.

CHECK : ***Connector & terminal***
(B54) No. 2 — Chassis ground:
Is the resistance more than 1 MΩ?

YES : Go to next CHECK .

NO : Repair ground short circuit in harness between TCM and transmission harness connector.

CHECK : ***Connector & terminal***
(B54) No. 3 — Chassis ground:
Is the resistance more than 1 MΩ?

YES : Go to next CHECK .

NO : Repair ground short circuit in harness between TCM and transmission harness connector.

CHECK : ***Connector & terminal***

(B54) No. 4 — Chassis ground:
Is the resistance more than 1 MΩ?

YES : Go to step **10BI5**.

NO : Repair ground short circuit in harness between TCM and transmission harness connector.

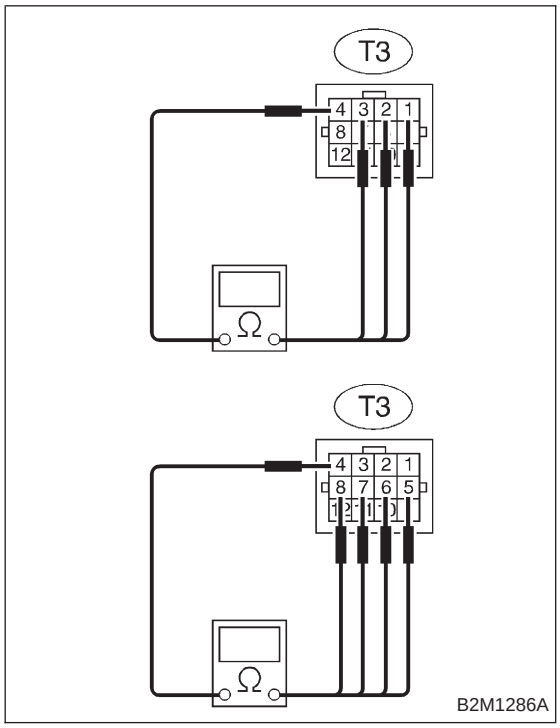

10BI5	CHECK INHIBITOR SWITCH.

Measure resistance between transmission harness connector receptacle's terminals.

CHECK : ***Connector & terminal (T3) No. 3 — No. 4***
- ***Is the resistance less than 1 Ω in "P" position?***
- ***Is the resistance more than 1 MΩ in other positions?***

YES : Go to next CHECK .

NO : Go to CHECK1 .

CHECK : ***Connector & terminal (T3) No. 2 — No. 4***
- ***Is the resistance less than 1 Ω in "R" position?***
- ***Is the resistance more than 1 MΩ in other positions?***

YES : Go to next CHECK .

NO : Go to CHECK1 .

CHECK : ***Connector & terminal (T3) No. 1 — No. 4***
- ***Is the resistance less than 1 Ω in "N" position?***
- ***Is the resistance more than 1 MΩ in other positions?***

YES : Go to next CHECK .

NO : Go to CHECK1 .

CHECK : ***Connector & terminal (T3) No. 8 — No. 4***
- ***Is the resistance less than 1 Ω in "D" position?***
- ***Is the resistance more than 1 MΩ in other positions?***

YES : Go to next CHECK .

NO : Go to CHECK1 .

CHECK : ***Connector & terminal (T3) No. 7 — No. 4***
- ***Is the resistance less than 1 Ω in "3" position?***
- ***Is the resistance more than 1 MΩ in other positions?***

YES : Go to next CHECK .

NO : Go to CHECK1 .

CHECK : ***Connector & terminal (T3) No. 6 — No. 4***
- ***Is the resistance less than 1 Ω in "2" position?***
- ***Is the resistance more than 1 MΩ in other positions?***

YES : Go to next CHECK .

NO : Go to CHECK1 .

CHECK : ***Connector & terminal (T3) No. 5 — No. 4***
- ***Is the resistance less than 1 Ω in "1" position?***
- ***Is the resistance more than 1 MΩ in other positions?***

YES : Go to step **10BI6**.

NO : Go to CHECK1 .

CHECK1 : ***Is there faulty connection in the selector cable?***

YES : Repair connection of selector cable.

NO : Replace inhibitor switch.

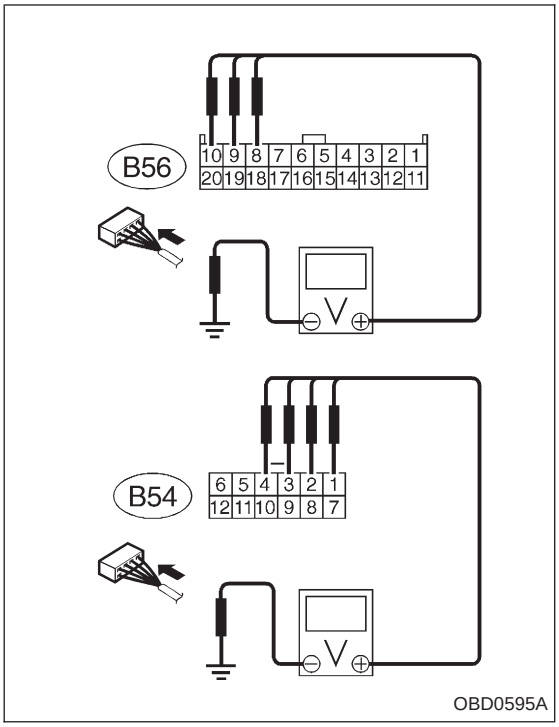

10BI6	CHECK INPUT SIGNAL FOR TCM.

1) Turn ignition switch to OFF.
2) Connect connector to TCM and transmission.
3) Turn ignition switch to ON.
4) Measure voltage between TCM and chassis ground.

CHECK : ***Connector & terminal (B56) No. 9 (+) — Chassis ground (−):***
- ***Is the voltage less than 1 V in "P" and "N" positions?***
- ***Is the voltage more than 8 V in other positions?***

YES : Go to next CHECK .
NO : Go to CHECK1 .

CHECK : ***Connector & terminal (B56) No. 10 (+) — Chassis ground (−):***
- ***Is the voltage less than 1 V in "R" position?***
- ***Is the voltage more than 6 V in other positions?***

YES : Go to next CHECK .
NO : Go to CHECK1 .

CHECK : ***Connector & terminal (B56) No. 8 (+) — Chassis ground (−):***
- ***Is the voltage less than 1 V in "N" and "P" positions?***
- ***Is the voltage more than 8 V in other positions?***

YES : Go to next CHECK .
NO : Go to CHECK1 .

CHECK : ***Connector & terminal (B54) No. 1 (+) — Chassis ground (−):***
- ***Is the voltage less than 1 V in "D" position?***
- ***Is the voltage more than 6 V in other positions?***

YES : Go to next CHECK .
NO : Go to CHECK1 .

CHECK : ***Connector & terminal (B54) No. 2 (+) — Chassis ground (−):***
- ***Is the voltage less than 1 V in "3" position?***
- ***Is the voltage more than 6 V in other positions?***

YES : Go to next CHECK .
NO : Go to CHECK1 .

CHECK : ***Connector & terminal (B54) No. 3 (+) — Chassis ground (−):***
- ***Is the voltage less than 1 V in "2" position?***
- ***Is the voltage more than 6 V in other positions?***

YES : Go to next CHECK .

NO : Go to CHECK1 .

CHECK : ***Connector & terminal (B54) No. 4 (+) — Chassis ground (−):***
- ***Is the voltage less than 1 V in "1" position?***
- ***Is the voltage more than 6 V in other positions?***

YES : Repair poor contact in TCM connector.

NO : Go to CHECK1 .

CHECK1 : ***Is there poor contact in TCM connector?***

YES : Repair poor contact in TCM connector.

NO : Replace TCM.

OBD	(FB1)
P0710	<ATF>

OBD0380

BJ: DTC P0710 — TRANSMISSION FLUID TEMPERATURE SENSOR CIRCUIT MALFUNCTION —

DTC DETECTING CONDITION:

- Two consecutive driving cycles with fault

TROUBLE SYMPTOM:

- No shift up to 4th speed (after engine warm-up)
- No lock-up (after engine warm-up)
- Excessive shift shock

WIRING DIAGRAM:

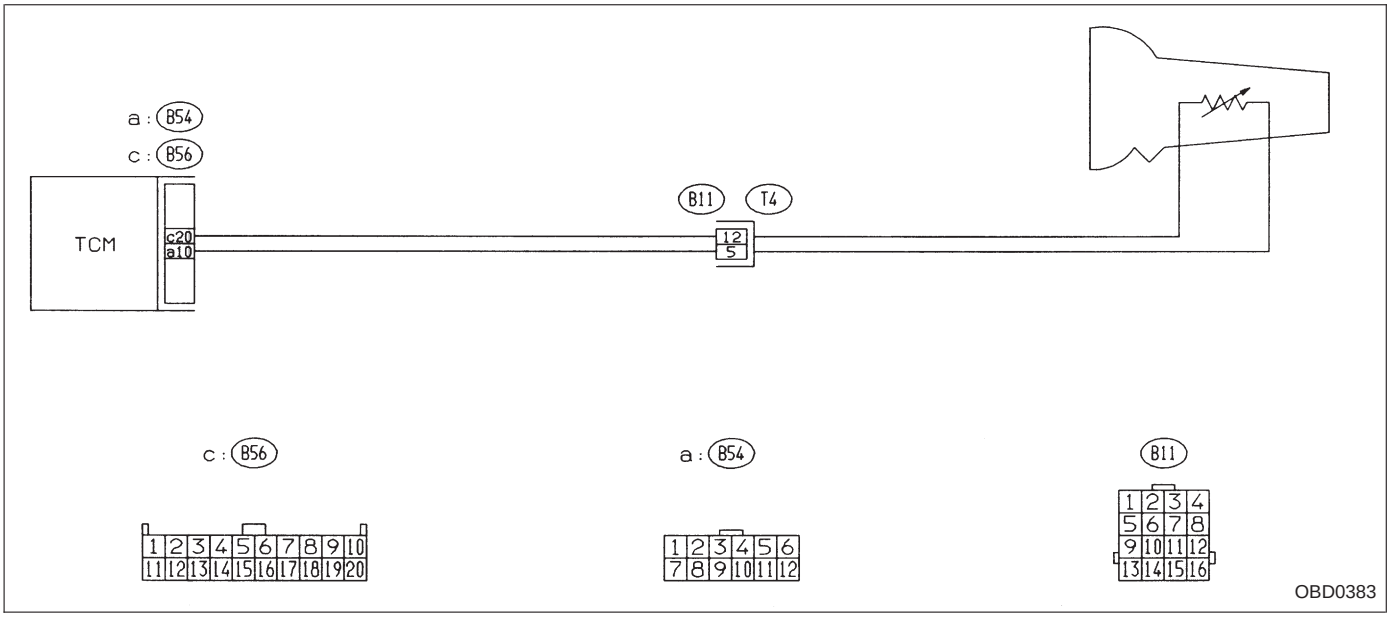

CAUTION:
After repair or replacement of faulty parts, conduct CLEAR MEMORY and INSPECTION MODES.
<Ref. to 2-7 [T3D0] and [T3E0].>

10BJ1	CHECK DTC P0710 ON DISPLAY.

CHECK : ***Does the Subaru select monitor or OBD-II general scan tool indicate DTC P0710?***

YES : Check ATF temperature sensor circuit. <Ref. to 3-2 [T7F0].>

NO : It is not necessary to inspect DTC P0710.

OBD	(FB1)
P0720	<ATVSP>

OBD0392

BK: DTC P0720 — OUTPUT SPEED SENSOR (VEHICLE SPEED SENSOR 1) CIRCUIT MALFUNCTION —

DTC DETECTING CONDITION:

- Two consecutive driving cycles with fault

TROUBLE SYMPTOM:

- No shift or excessive tight corner “braking”

WIRING DIAGRAM:

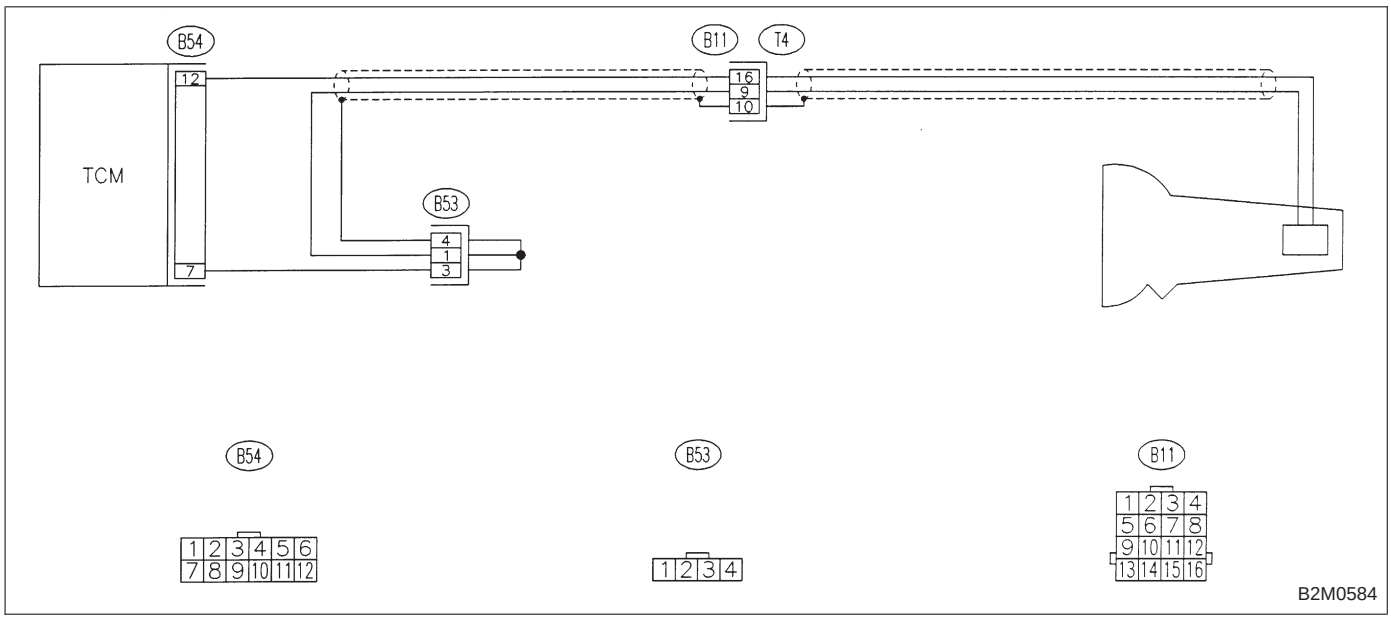

CAUTION:
After repair or replacement of faulty parts, conduct CLEAR MEMORY and INSPECTION MODES.
<Ref. to 2-7 [T3D0] and [T3E0].>

10BK1	CHECK DTC P0720 ON DISPLAY.

CHECK : ***Does the Subaru select monitor or OBD-II general scan tool indicate DTC P0720?***

YES : Check vehicle speed sensor 1 circuit. <Ref. to 3-2 [T7L0].>

NO : It is not necessary to inspect DTC P0720.

OBD	(FB1)
P0725	<ATNE>

OBD0404

BL: DTC P0725 — ENGINE SPEED INPUT CIRCUIT MALFUNCTION —

DTC DETECTING CONDITION:

- Two consecutive driving cycles with fault

TROUBLE SYMPTOM:

- No lock-up (after engine warm-up)
- AT diagnostic indicator light (AT OIL TEMP indicator light) remains on when vehicle speed is “0”.

WIRING DIAGRAM:

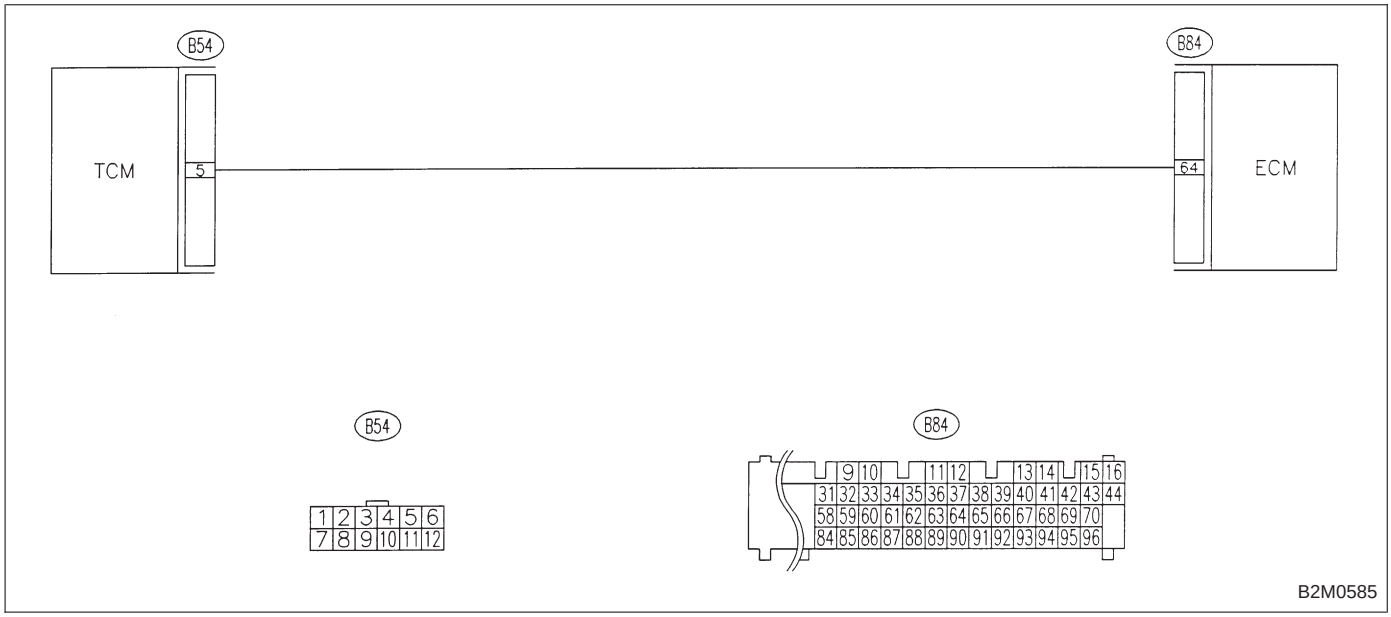

CAUTION:
After repair or replacement of faulty parts, conduct CLEAR MEMORY and INSPECTION MODES.
<Ref. to 2-7 [T3D0] and [T3E0].>

10BL1	CHECK DTC P0725 ON DISPLAY.

CHECK : ***Does the Subaru select monitor or OBD-II general scan tool indicate DTC P0725?***

YES : Check engine speed input signal circuit. <Ref. to 3-2 [T7H0].>

NO : It is not necessary to inspect DTC P0725.

OBD (FB1)
P0731 <ATGR1>
B2M0657

BM: DTC P0731
— GEAR 1 INCORRECT RATIO —

OBD (FB1)
P0732 <ATGR2>
B2M0658

BN: DTC P0732
— GEAR 2 INCORRECT RATIO —

OBD (FB1)
P0733 <ATGR3>
B2M0659

BO: DTC P0733
— GEAR 3 INCORRECT RATIO —

OBD (FB1)
P0734 <ATGR4>
B2M0660

BP: DTC P0734
— GEAR 4 INCORRECT RATIO —

DTC DETECTING CONDITION:

- Two consecutive driving cycles with fault

TROUBLE SYMPTOM:

- Shift point too high or too low; engine brake not effected in “3” range; excessive shift shock; excessive tight corner “braking”

WIRING DIAGRAM:

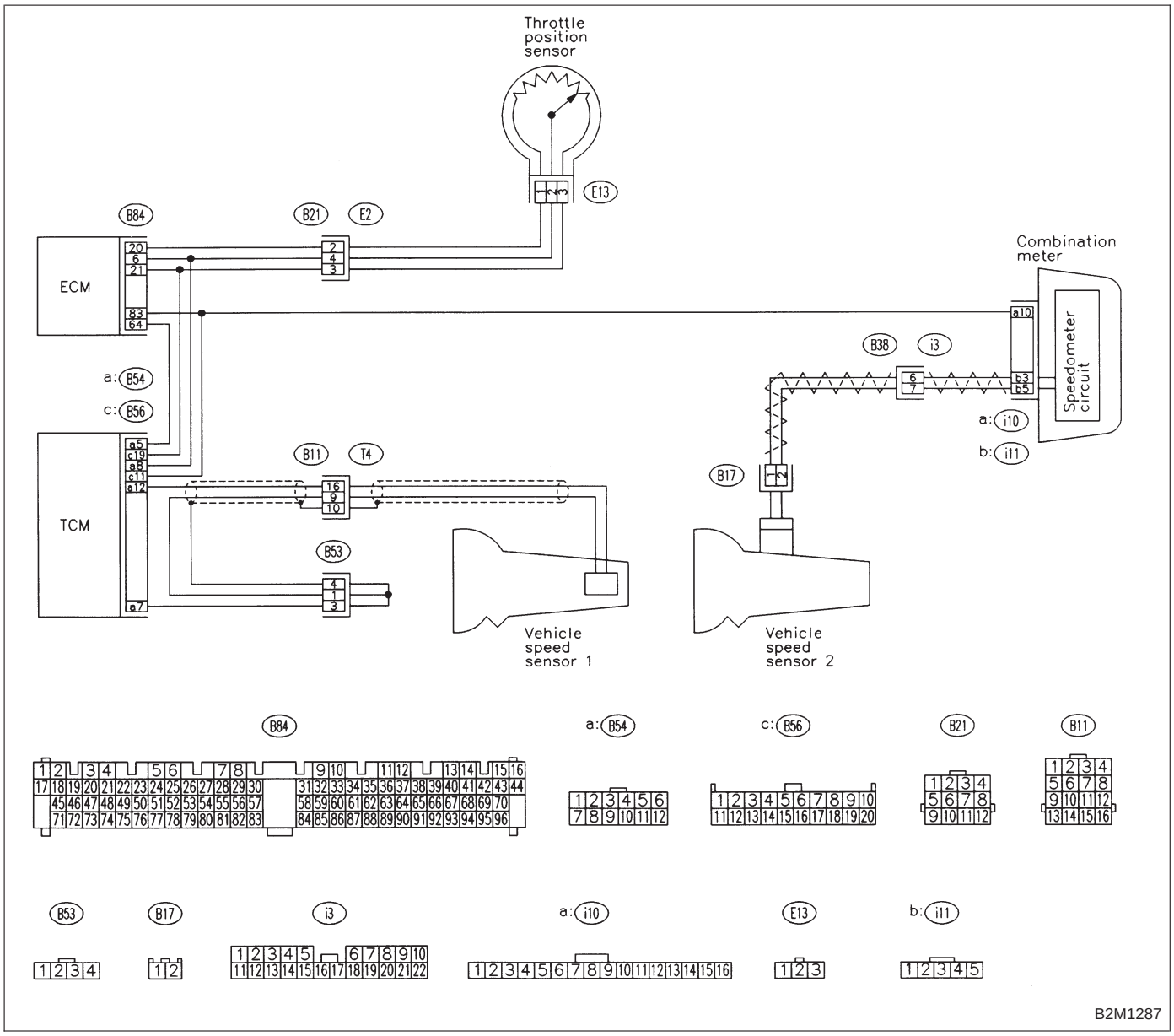

CAUTION:
After repair or replacement of faulty parts, conduct CLEAR MEMORY and INSPECTION MODES.
<Ref. to 2-7 [T3D0] and [T3E0].>

10BP1	**CHECK ANY OTHER DTC (BESIDES DTC P0731, P0732, P0733, P0734) ON DISPLAY.**

CHECK ***: Is there any other DTC on display?***

YES : Inspect relevant DTC using “10. Diagnostics Chart with Trouble Code”. <Ref. to 2-7 [T10A0].>

NO : Go to step **10BP2**.

10BP2	CHECK THROTTLE POSITION SENSOR CIRCUIT.

Check throttle position sensor circuit. <Ref. to 3-2 [T7K0].>

CHECK ***: Is there any trouble in throttle position sensor circuit?***

YES : Repair or replace throttle position sensor circuit.

NO : Go to step **10BP3**.

10BP3	CHECK VEHICLE SPEED SENSOR 1 CIRCUIT.

Check vehicle speed sensor 1 circuit. <Ref. to 3-2 [T7L0].>

CHECK ***: Is there any trouble in vehicle speed sensor 1 circuit?***

YES : Repair or replace vehicle speed sensor 1 circuit.

NO : Go to step **10BP4**.

10BP4	CHECK VEHICLE SPEED SENSOR 2 CIRCUIT.

Check vehicle speed sensor 2 circuit. <Ref. to 3-2 [T7M0].>

CHECK ***: Is there any trouble in vehicle speed sensor 2 circuit?***

YES : Repair or replace vehicle speed sensor 2 circuit.

NO : Go to step **10BP5**.

10BP5	CHECK ENGINE SPEED INPUT CIRCUIT.

Check engine speed input circuit. <Ref. to 3-2 [T7H0].>

CHECK ***: Is there any trouble in engine speed input circuit?***

YES : Repair or replace engine speed input circuit.

NO : Go to next CHECK .

CHECK ***: Is there poor contact in TCM connector?***

YES : Repair poor contact in TCM connector.

NO : Go to next CHECK .

CHECK ***: Is there any mechanical trouble in automatic transmission?***

YES : Repair or replace automatic transmission.

NO : Replace TCM.

OBD (FB1)

P0740 <ATLU_F>

B2M0661

BQ: DTC P0740 — TORQUE CONVERTER CLUTCH SYSTEM MALFUNCTION —

DTC DETECTING CONDITION:

- Two consecutive driving cycles with fault

TROUBLE SYMPTOM:

- No lock-up (after engine warm-up)
- No shift or excessive tight corner “braking”

WIRING DIAGRAM:

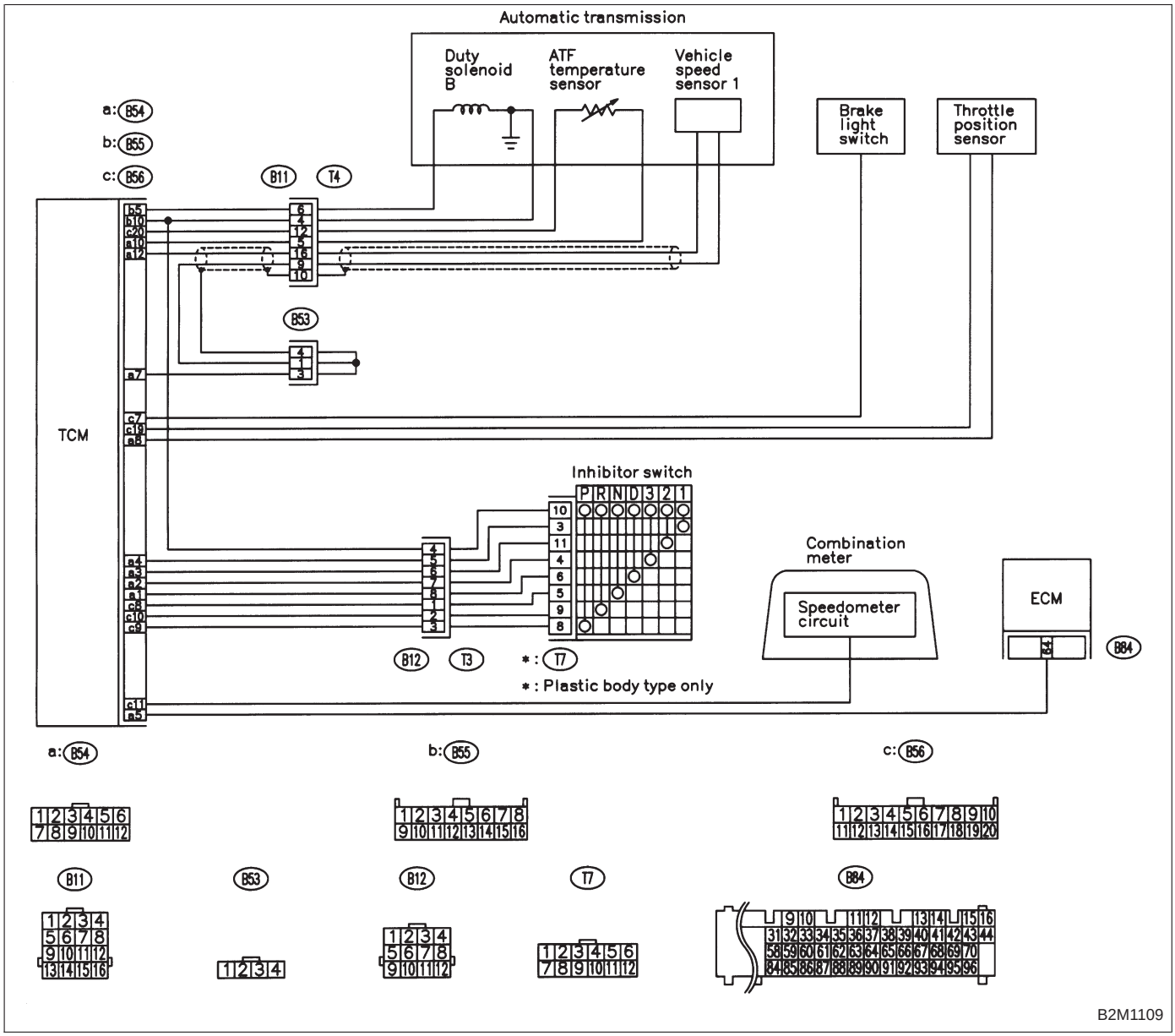

CAUTION:
After repair or replacement of faulty parts, conduct CLEAR MEMORY and INSPECTION MODES.
<Ref. to 2-7 [T3D0] and [T3E0].>

10BQ1	CHECK ANY OTHER DTC (BESIDES DTC P0740) ON DISPLAY.

CHECK ***: Is there any other DTC on display?***

YES : Inspect the relevant DTC using “10. Diagnostics Chart with Trouble Code”. <Ref. to 2-7 [T10A0].>

NO : Go to step **10BQ2**.

10BQ2	CHECK DUTY SOLENOID B CIRCUIT.

Check duty solenoid B circuit. <Ref. to 3-2 [T7B0].>

CHECK ***: Is there any trouble in duty solenoid B circuit?***

YES : Repair or replace duty solenoid B circuit.

NO : Go to step **10BQ3**.

10BQ3	CHECK THROTTLE POSITION SENSOR CIRCUIT.

Check throttle position sensor circuit. <Ref. to 3-2 [T7K0].>

CHECK ***: Is there any trouble in throttle position sensor circuit?***

YES : Repair or replace throttle position sensor circuit.

NO : Go to step **10BQ4**.

10BQ4	CHECK VEHICLE SPEED SENSOR 1 CIRCUIT.

Check vehicle speed sensor 1 circuit. <Ref. to 3-2 [T7L0].>

CHECK ***: Is there any trouble in vehicle speed sensor 1 circuit?***

YES : Repair or replace vehicle speed sensor 1 circuit.

NO : Go to step **10BQ5**.

10BQ5	CHECK VEHICLE SPEED SENSOR 2 CIRCUIT.

Check vehicle speed sensor 2 circuit. <Ref. to 3-2 [T7M0].>

CHECK ***: Is there any trouble in vehicle speed sensor 2 circuit?***

YES : Repair or replace vehicle speed sensor 2 circuit.

NO : Go to step **10BQ6**.

10BQ6	CHECK ENGINE SPEED INPUT CIRCUIT.

Check engine speed input circuit. <Ref. to 3-2 [T7H0].>

CHECK ***: Is there any trouble in engine speed input circuit?***

YES : Repair or replace engine speed input circuit.

NO : Go to step **10BQ7**.

10BQ7	CHECK INHIBITOR SWITCH CIRCUIT.

Check inhibitor switch circuit. <Ref. to 2-7 [T10BI0].>

CHECK ***: Is there any trouble in inhibitor switch circuit?***

YES : Repair or replace inhibitor switch circuit.

NO : Go to step **10BQ8**.

10BQ8	CHECK BRAKE LIGHT SWITCH CIRCUIT.

Check brake light switch circuit. <Ref. to 2-7 [T10BH0].>

CHECK ***: Is there any trouble in brake light switch circuit?***

YES : Repair or replace brake light switch circuit.

NO : Go to step **10BQ9**.

10BQ9	CHECK ATF TEMPERATURE SENSOR CIRCUIT.

Check ATF temperature sensor circuit. <Ref. to 3-2 [T7F0].>

CHECK ***: Is there any trouble in ATF temperature sensor circuit?***

YES : Repair or replace ATF temperature sensor circuit.

NO : Go to next CHECK .

CHECK ***: Is there poor contact in TCM connector?***

YES : Repair poor contact in TCM connector.

NO : Go to next CHECK .

CHECK ***: Is there any mechanical trouble in automatic transmission?***

YES : Repair or replace automatic transmission.

NO : Replace TCM.

OBD (FB1)
P0743 <ATLU>
B2M0662

BR: DTC P0743 — TORQUE CONVERTER CLUTCH SYSTEM (DUTY SOLENOID B) ELECTRICAL —

DTC DETECTING CONDITION:

- Two consecutive driving cycles with fault

TROUBLE SYMPTOM:

- No lock-up (after engine warm-up)

WIRING DIAGRAM:

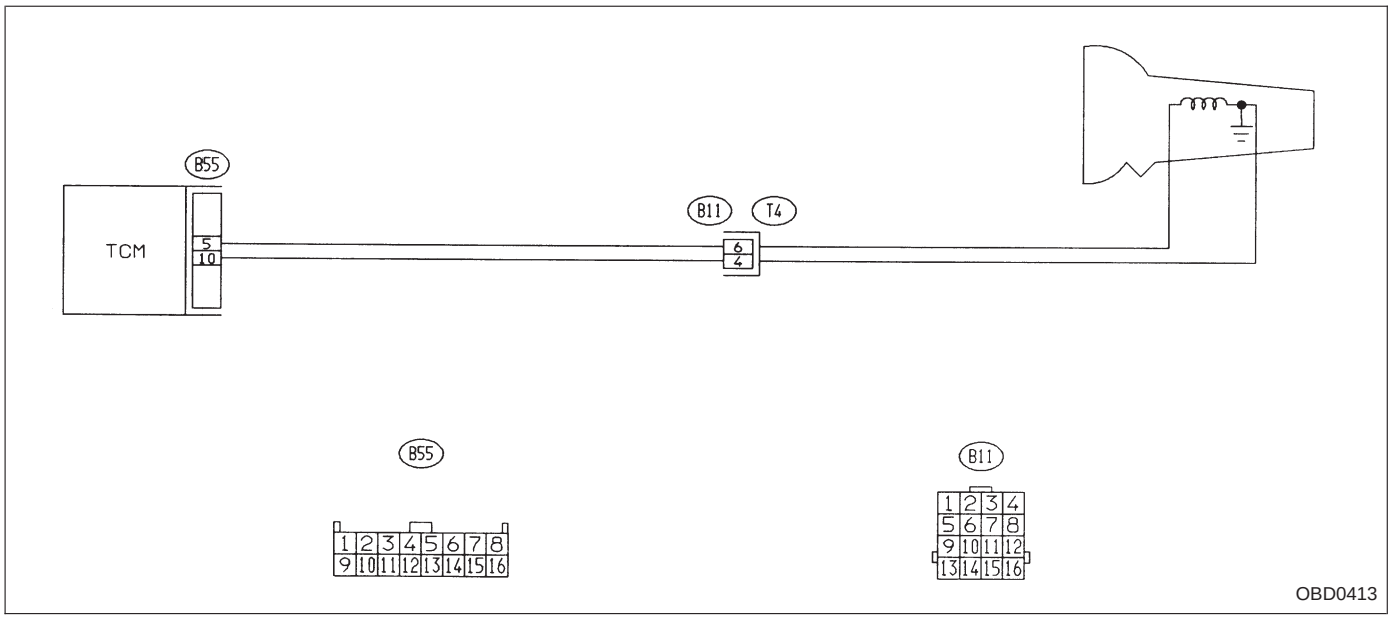

CAUTION:
After repair or replacement of faulty parts, conduct CLEAR MEMORY and INSPECTION MODES.
<Ref. to 2-7 [T3D0] and [T3E0].>

10BR1	CHECK DTC P0743 ON DISPLAY.

CHECK : ***Does the Subaru select monitor or OBD-II general scan tool indicate DTC P0743?***

YES : Check duty solenoid B circuit. <Ref. to 3-2 [T7B0].>

NO : It is not necessary to inspect DTC P0743.

OBD (FB1)
P0748 <ATPL>
B2M0663

BS: DTC P0748 — PRESSURE CONTROL SOLENOID (DUTY SOLENOID A) ELECTRICAL —

DTC DETECTING CONDITION:

- Two consecutive driving cycles with fault

TROUBLE SYMPTOM:

- Excessive shift shock

WIRING DIAGRAM:

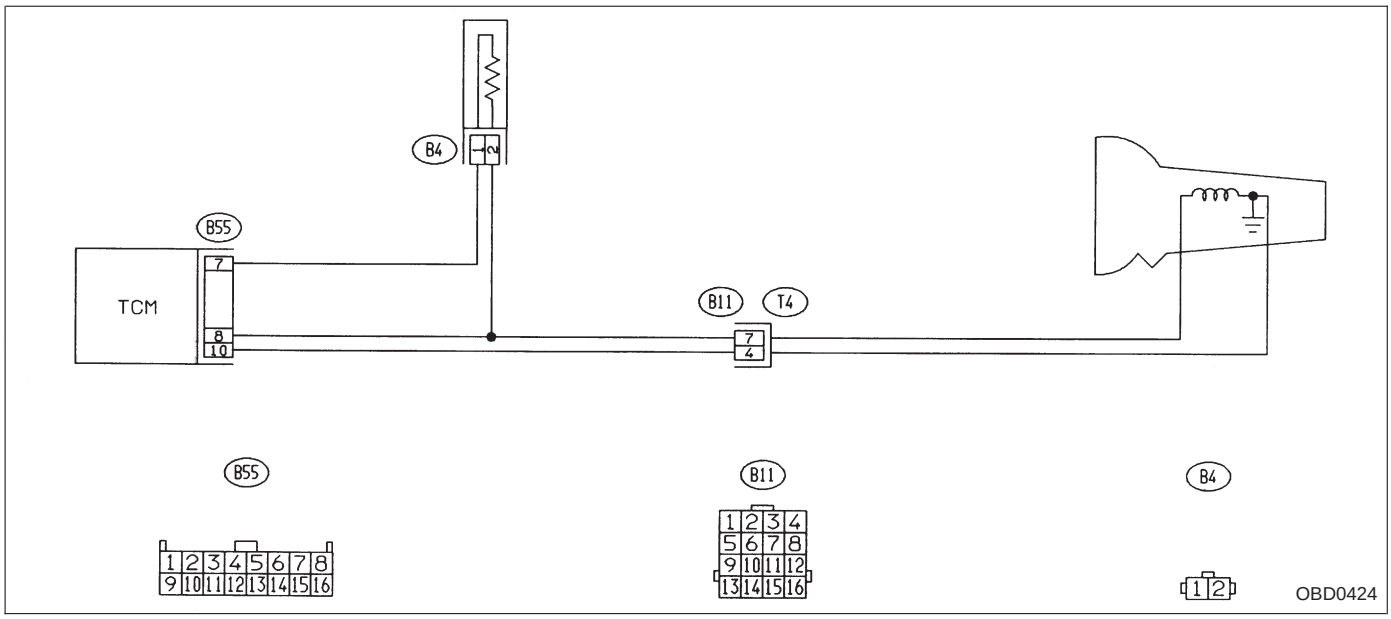

CAUTION:
After repair or replacement of faulty parts, conduct CLEAR MEMORY and INSPECTION MODES.
<Ref. to 2-7 [T3D0] and [T3E0].>

10BS1	CHECK DTC P0748 ON DISPLAY.

CHECK : ***Does the Subaru select monitor or OBD-II general scan tool indicate DTC P0748?***

YES : Check duty solenoid A circuit. <Ref. to 3-2 [T7A0].>

NO : It is not necessary to inspect DTC P0748.

OBD (FB1)

P0753 <ATSFT1>

B2M0664

BT: DTC P0753 — SHIFT SOLENOID A (SHIFT SOLENOID 1) ELECTRICAL —

DTC DETECTING CONDITION:

- Two consecutive driving cycles with fault

TROUBLE SYMPTOM:

- No shift

WIRING DIAGRAM:

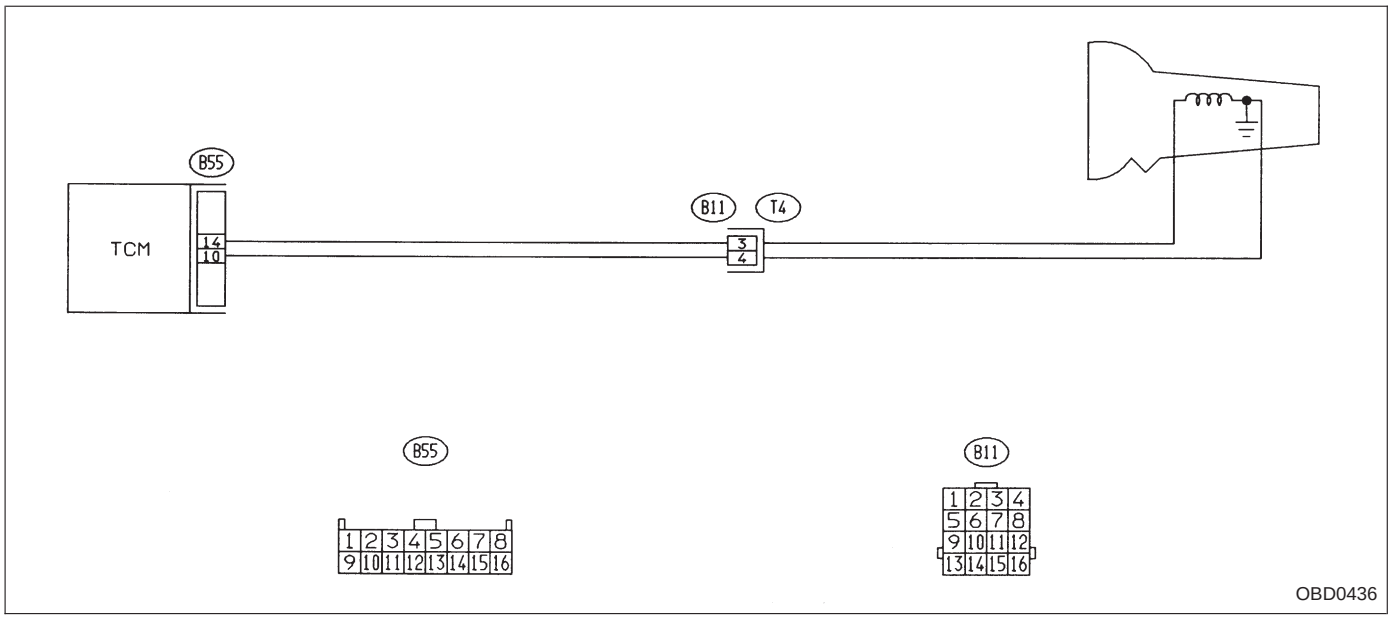

CAUTION:
After repair or replacement of faulty parts, conduct CLEAR MEMORY and INSPECTION MODES.
<Ref. to 2-7 [T3D0] and [T3E0].>

10BT1	CHECK DTC P0753 ON DISPLAY.

CHECK : ***Does the Subaru select monitor or OBD-II general scan tool indicate DTC P0753?***

YES : Check shift solenoid 1 circuit. <Ref. to 3-2 [T7E0].>

NO : It is not necessary to inspect DTC P0753.

OBD (FB1)

P0758 <ATSFT2>

B2M0665

BU: DTC P0758 — SHIFT SOLENOID B (SHIFT SOLENOID 2) ELECTRICAL —

DTC DETECTING CONDITION:

- Two consecutive driving cycles with fault

TROUBLE SYMPTOM:

- No shift

WIRING DIAGRAM:

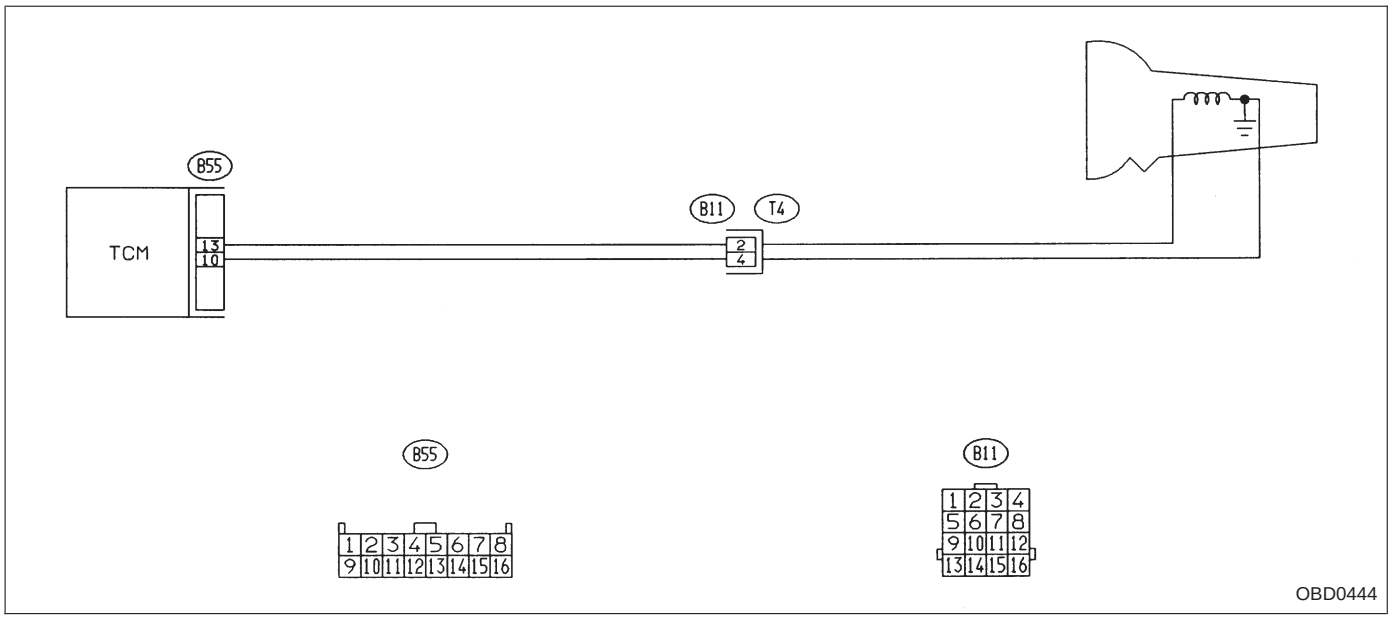

CAUTION:
After repair or replacement of faulty parts, conduct CLEAR MEMORY and INSPECTION MODES.
<Ref. to 2-7 [T3D0] and [T3E0].>

10BU1	**CHECK DTC P0758 ON DISPLAY.**

CHECK : ***Does the Subaru select monitor or OBD-II general scan tool indicate DTC P0758?***

YES : Check shift solenoid 2 circuit. <Ref. to 3-2 [T7D0].>

NO : It is not necessary to inspect DTC P0758.

OBD (FB1)

P0760<ATOVR_F>

B2M0666

BV: DTC P0760 — SHIFT SOLENOID C (SHIFT SOLENOID 3) MALFUNCTION —

DTC DETECTING CONDITION:

- Two consecutive driving cycles with fault

TROUBLE SYMPTOM:

- Ineffective engine brake with selector lever in “3”

WIRING DIAGRAM:

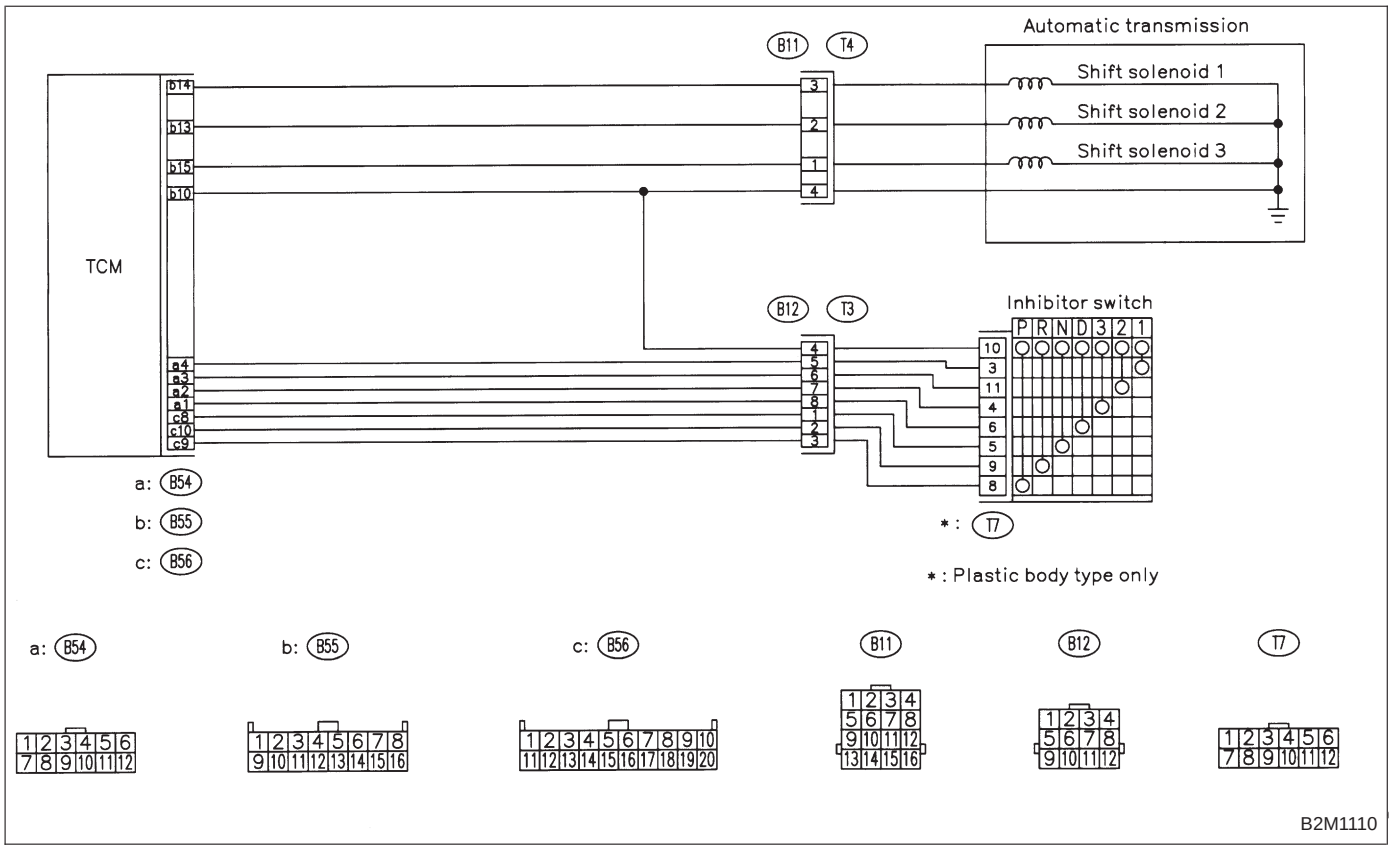

CAUTION:
After repair or replacement of faulty parts, conduct CLEAR MEMORY and INSPECTION MODES.
<Ref. to 2-7 [T3D0] and [T3E0].>

10BV1	**CHECK ANY OTHER DTC (BESIDES DTC P0760) ON DISPLAY.**

CHECK ***: Is there any other DTC on display?***

YES : Inspect relevant DTC using “10. Diagnostics Chart with Trouble Code”. <Ref. to 2-7 [T10A0].>

NO : Go to step **10BV2**.

10BV2	CHECK INHIBITOR SWITCH CIRCUIT.

Check inhibitor switch circuit. <Ref. to 2-7 [T10BI0].>

CHECK ***: Is there any trouble in inhibitor switch circuit?***

YES : Repair or replace inhibitor switch circuit.

NO : Go to step **10BV3**.

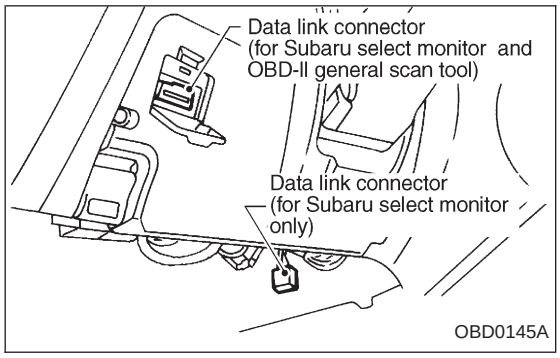

10BV3	CHECK GEAR POSITION.

1) Turn ignition switch to OFF.
2) Connect the Subaru select monitor to data link connector.
3) Lift-up or raise the vehicle and support with safety stands.

CAUTION:
On AWD models, raise all wheels off ground.

4) Start and warm-up the engine and transmission.

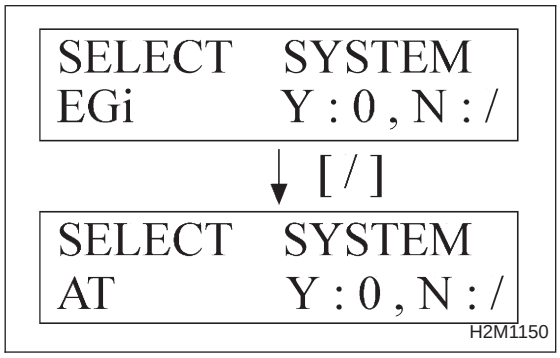

5) Subaru select monitor switch to ON.
6) Select AT mode using function key.
Press the function key [/], and change to AT mode.
7) Press the function key [0].

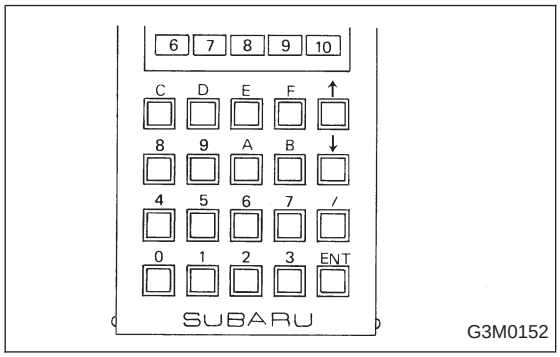

8) Designate mode using function key.

Function mode for AT: F10

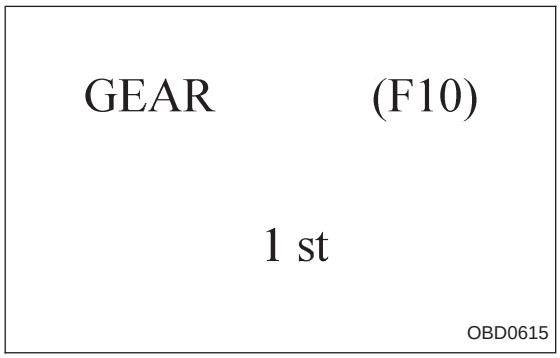

9) Move selector lever to “D” and drive the vehicle.
10) Read data on Subaru select monitor.

CHECK ***: Does gear position change according to throttle position and vehicle speed?***

YES : Go to next CHECK .

NO : Go to step **10BV4**.

CHECK ***: Is there poor contact in TCM connector?***

YES : Repair poor contact in TCM connector.

NO : Go to next CHECK .

CHECK ***: Is there any mechanical trouble in automatic transmission?***

YES : Repair or replace automatic transmission.

NO : Replace TCM.

10BV4	CHECK SHIFT SOLENOID 1 CIRCUIT.

Check shift solenoid 1 circuit. <Ref. to 3-2 [T7E0].>

CHECK ***: Is there any trouble in shift solenoid 1 circuit?***

YES : Repair or replace shift solenoid 1 circuit.

NO : Go to step **10BV5**.

10BV5	CHECK SHIFT SOLENOID 2 CIRCUIT.

Check shift solenoid 2 circuit. <Ref. to 3-2 [T7D0].>

CHECK ***: Is there any trouble in shift solenoid 2 circuit?***

YES : Repair or replace shift solenoid 2 circuit.

NO : Go to step **10BV6**.

10BV6	CHECK SHIFT SOLENOID 3 CIRCUIT.

Check shift solenoid 3 circuit. <Ref. to 3-2 [T7C0].>

CHECK ***: Is there any trouble in shift solenoid 3 circuit?***

YES : Repair or replace shift solenoid 3 circuit.

NO : Go to next CHECK .

CHECK ***: Is there poor contact in TCM connector?***

YES : Repair poor contact in TCM connector.

NO : Go to next CHECK .

CHECK ***: Is there any mechanical trouble in automatic transmission?***

YES : Repair or replace automatic transmission.

NO : Replace TCM.

OBD (FB1)
P0763 <ATOVR>
B2M0667

BW: DTC P0763 — SHIFT SOLENOID C (SHIFT SOLENOID 3) ELECTRICAL —

DTC DETECTING CONDITION:

- Two consecutive driving cycles with fault

TROUBLE SYMPTOM:

- Ineffective engine brake with selector lever in “3”

WIRING DIAGRAM:

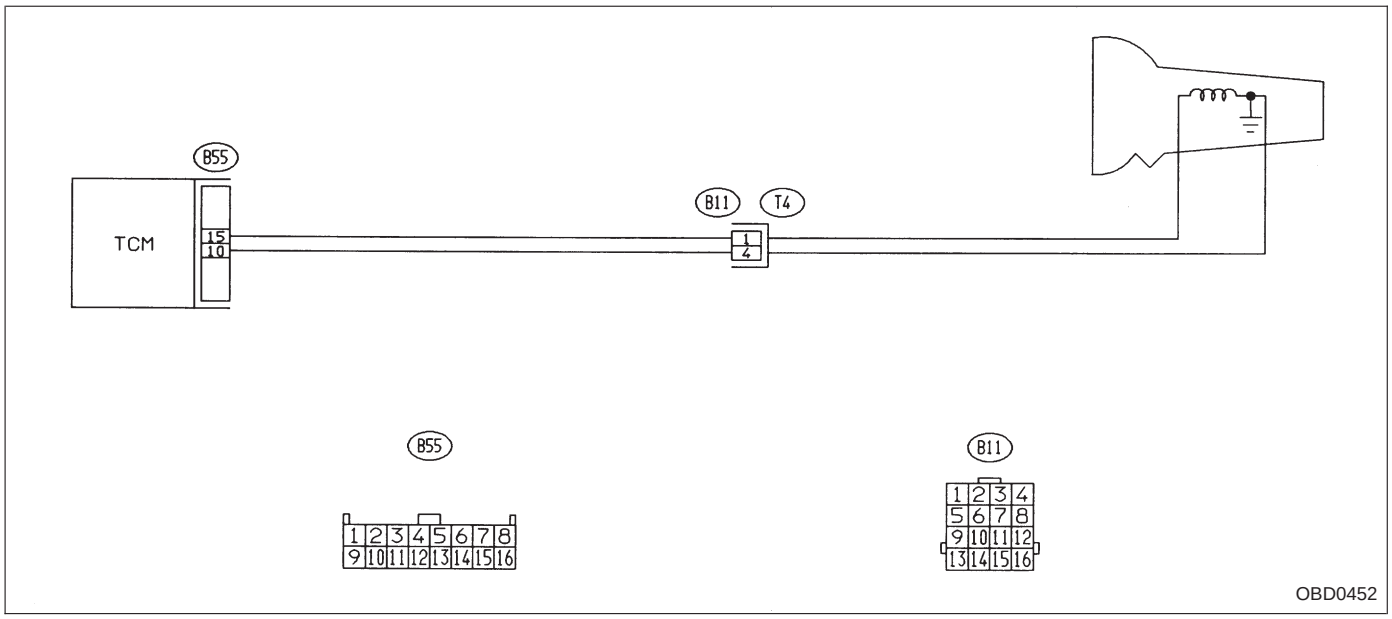

CAUTION:
After repair or replacement of faulty parts, conduct CLEAR MEMORY and INSPECTION MODES.
<Ref. to 2-7 [T3D0] and [T3E0].>

10BW1	**CHECK DTC P0763 ON DISPLAY.**

CHECK ***: Does the Subaru select monitor or OBD-II general scan tool indicate DTC P0763?***

YES : Check shift solenoid 3 circuit. <Ref. to 3-2 [T7C0].>

NO : It is not necessary to inspect DTC P0763.

OBD (FB1)

P1100 <ST_SWOFF>

B2M1113

BX: DTC P1100 — STARTER SWITCH CIRCUIT LOW INPUT —

DTC DETECTING CONDITION:

- Two consecutive driving cycles with fault

TROUBLE SYMPTOM:

- Failure of engine to start

WIRING DIAGRAM:

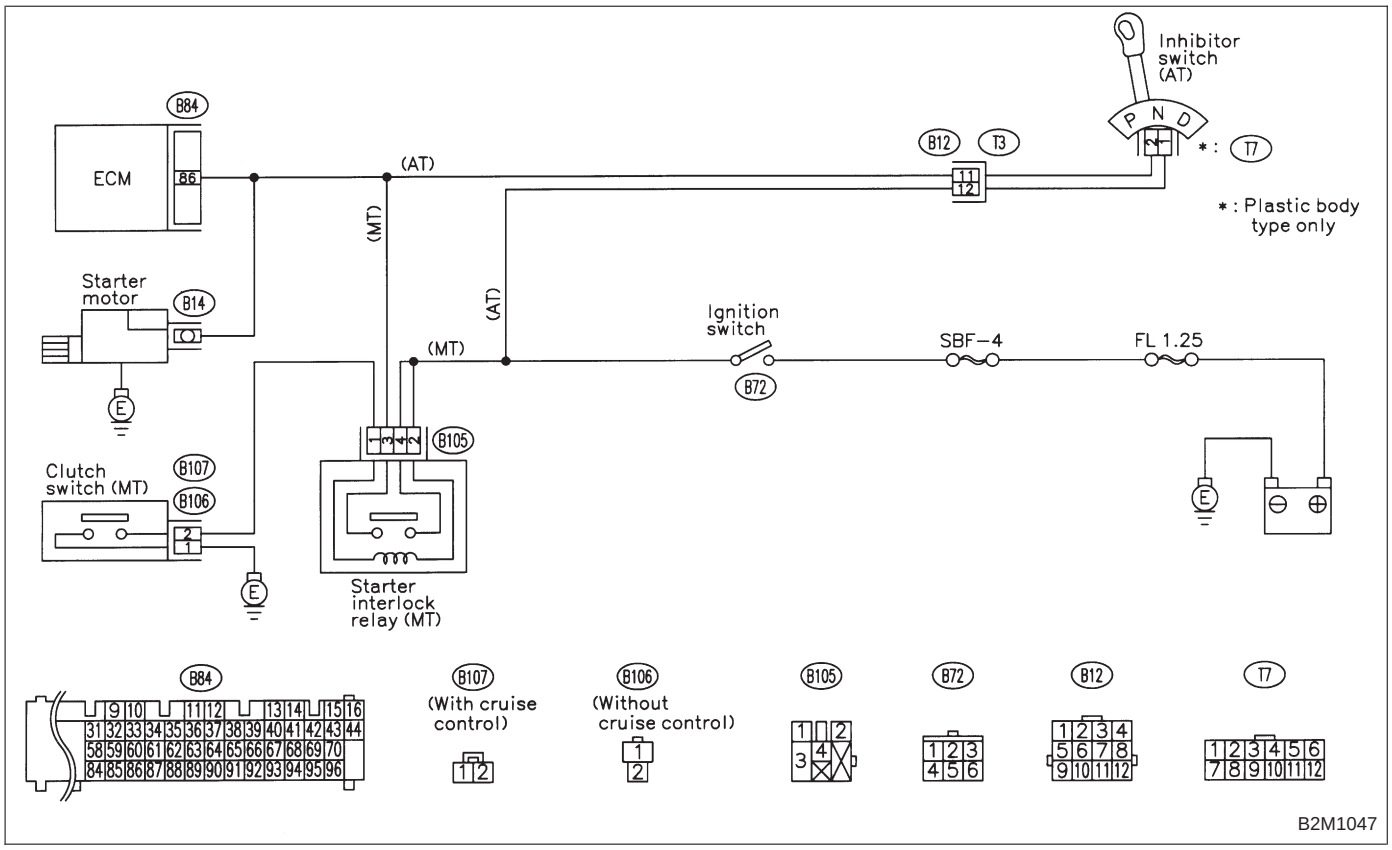

B2M1047

CAUTION:
After repair or replacement of faulty parts, conduct CLEAR MEMORY and INSPECTION MODES.
<Ref. to 2-7 [T3D0] and [T3E0].>

10BX1	CHECK OPERATION OF STARTER MOTOR.

CHECK ***: Does starter motor operate when ignition switch to "ST"?***

NOTE:
- On AT vehicles, place the inhibitor switch in the "P" or "N" position.
- On MT vehicles, depress the clutch pedal.

YES : Repair harness and connector.

NOTE:
In this case, repair the following:
- Open or ground short circuit in harness between ECM and starter motor connector.
- Poor contact in ECM connector.

NO : Check starter motor circuit. <Ref. to 2-7 [T8B0].>

OBD (FB1)

P1101 <N_SW>

B2M1114

BY: DTC P1101 — NEUTRAL POSITION SWITCH CIRCUIT MALFUNCTION [MT VEHICLES] —

DTC DETECTING CONDITION:

- Two consecutive driving cycles with fault

TROUBLE SYMPTOM:

- Erroneous idling

WIRING DIAGRAM:

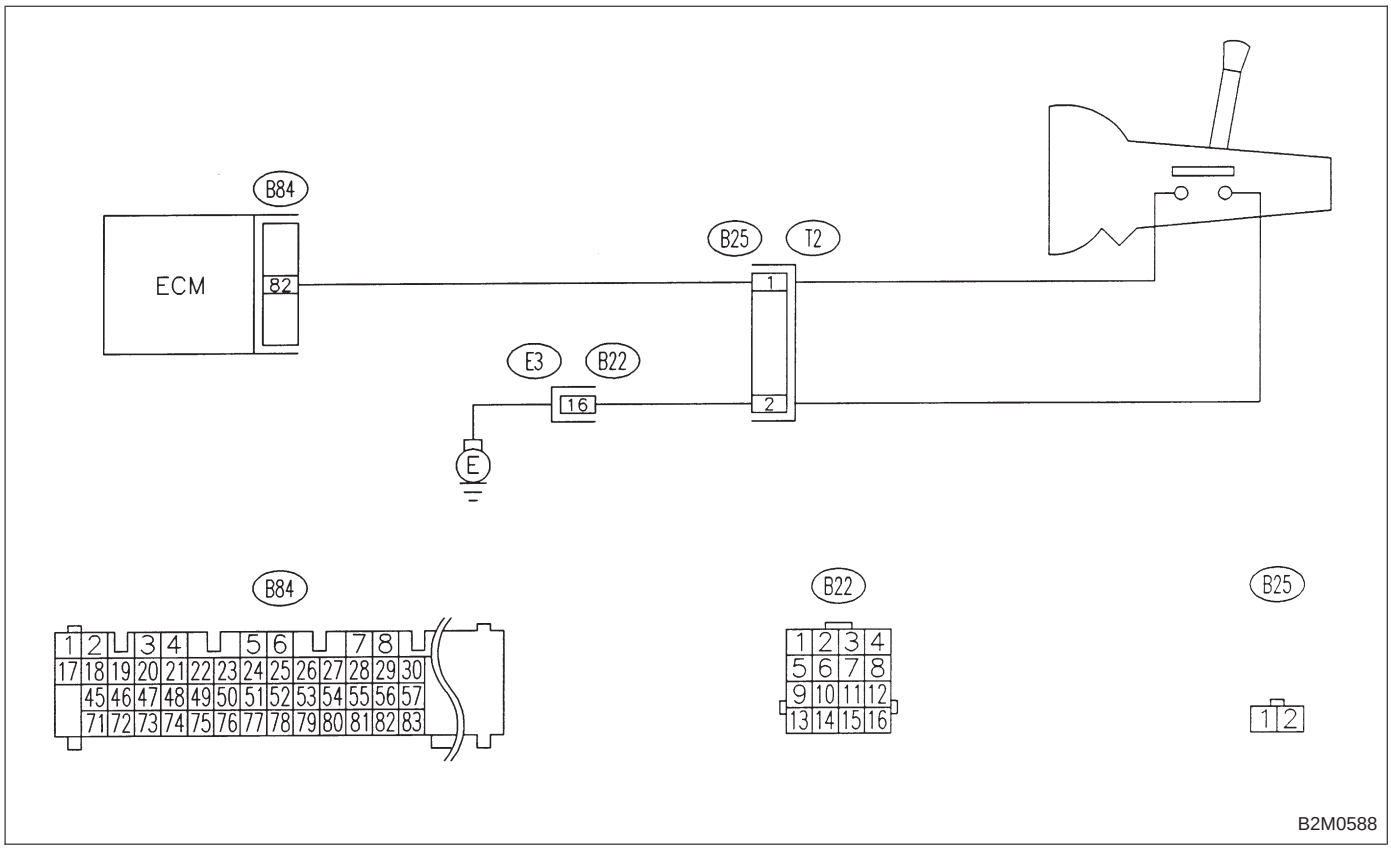

CAUTION:
After repair or replacement of faulty parts, conduct CLEAR MEMORY and INSPECTION MODES.
<Ref. to 2-7 [T3D0] and [T3E0].>

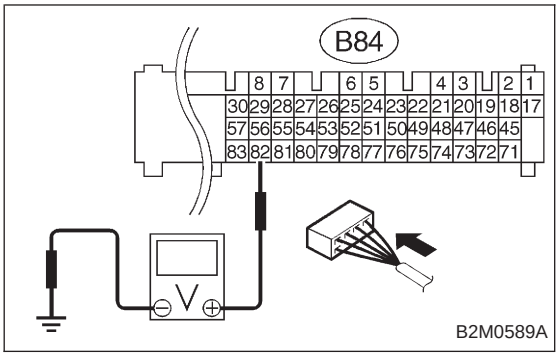

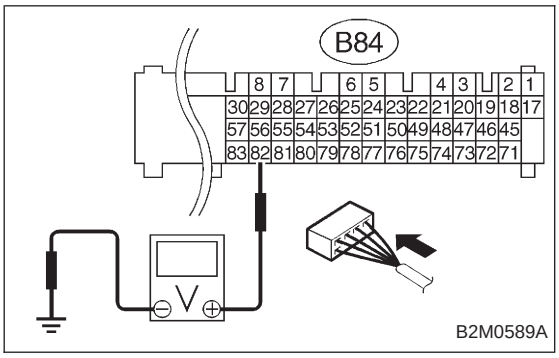

10BY1	CHECK INPUT SIGNAL FOR ECM.

1) Turn ignition switch to ON.
2) Measure voltage between ECM and chassis ground.

CHECK : ***Connector & terminal (B84) No. 82 (+) — Chassis ground (−): Is the voltage between 4.5 and 5.5 V in neutral position?***

YES : Go to next CHECK .

NO : Go to step **10BY2**.

CHECK : ***Connector & terminal (B84) No. 82 (+) — Chassis ground (−): Is the voltage less than 1 V in other positions?***

YES : Go to next CHECK .

NO : Go to step **10BY2**.

CHECK : ***Is there poor contact in ECM connector?***

YES : Repair poor contact in ECM connector.

NO : Contact with SOA service.

NOTE:
Inspection by DTM is required, because probable cause is deterioration of multiple parts.

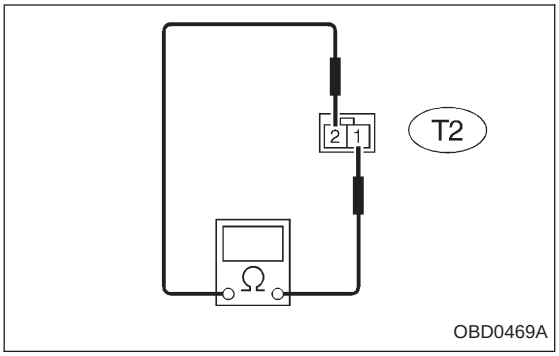

10BY2	CHECK NEUTRAL POSITION SWITCH.

1) Turn ignition switch to OFF.
2) Disconnect connector from transmission harness.
3) Measure resistance between transmission harness and connector terminals.

CHECK : ***Connector & terminal (T2) No. 1 — No. 2: Is the resistance more than 1 MΩ in neutral position?***

YES : Go to next CHECK .

NO : Repair short circuit in transmission harness or replace neutral position switch.

CHECK : ***Connector & terminal (T2) No. 1 — No. 2: Is the resistance less than 1 Ω in other positions?***

YES : Go to step **10BY3**.

NO : Repair open circuit in transmission harness or replace neutral position switch.

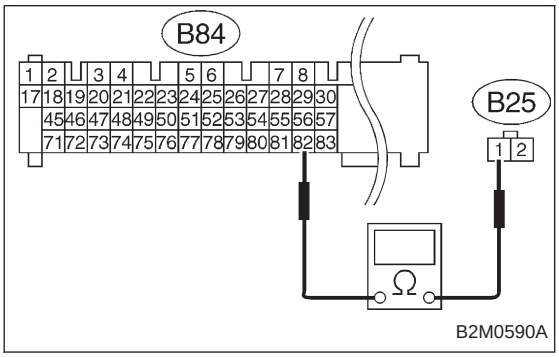

10BY3	CHECK HARNESS BETWEEN ECM AND NEUTRAL POSITION SWITCH.

1) Disconnect connector from ECM.
2) Measure resistance of harness between ECM and transmission harness connector.

CHECK : ***Connector & terminal (B84) No. 82 — (B25) No. 1: Is the resistance less than 1 Ω?***

YES : Go to next step 3).

NO : Repair open circuit in harness between ECM and transmission harness connector.

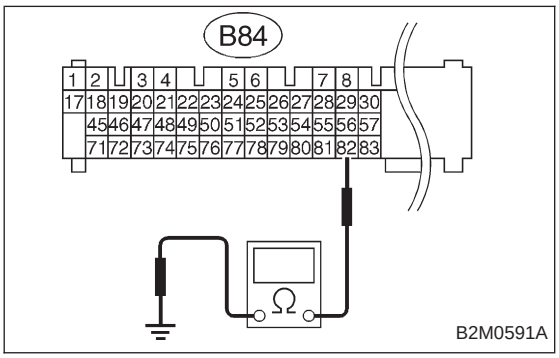

3) Measure resistance between ECM and chassis ground.

CHECK : ***Connector & terminal (B84) No. 82 — Chassis ground: Is the resistance less than 10 Ω?***

YES : Repair ground short circuit in harness between ECM and transmission harness connector.

NO : Go to next step 4).

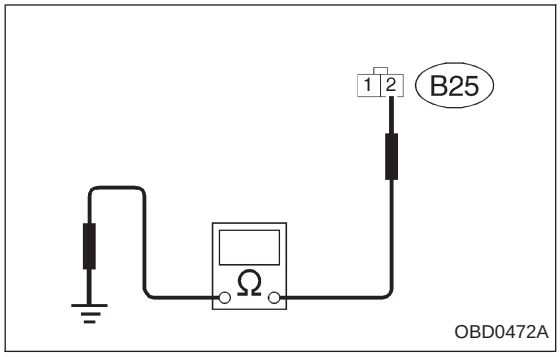

4) Measure resistance of harness between transmission harness connector and engine ground.

CHECK : ***Connector & terminal (B25) No. 2 — Engine ground: Is the resistance less than 5 Ω?***

YES : Go to next CHECK .

NO : Repair harness and connector.

NOTE:
In this case, repair the following:
- Open circuit in harness between transmission harness connector and engine grounding terminal
- Poor contact in coupling connector (B22)

CHECK : ***Is there poor contact in transmission harness connector?***

YES : Repair poor contact in transmission harness connector.

NO : Replace ECM.

OBD (FB1)

P1101 <N_SWOFF>

B2M1115

BZ: DTC P1101 — NEUTRAL POSITION SWITCH CIRCUIT HIGH INPUT [AT VEHICLES] —

DTC DETECTING CONDITION:

- Two consecutive driving cycles with fault

TROUBLE SYMPTOM:

- Erroneous idling

WIRING DIAGRAM:

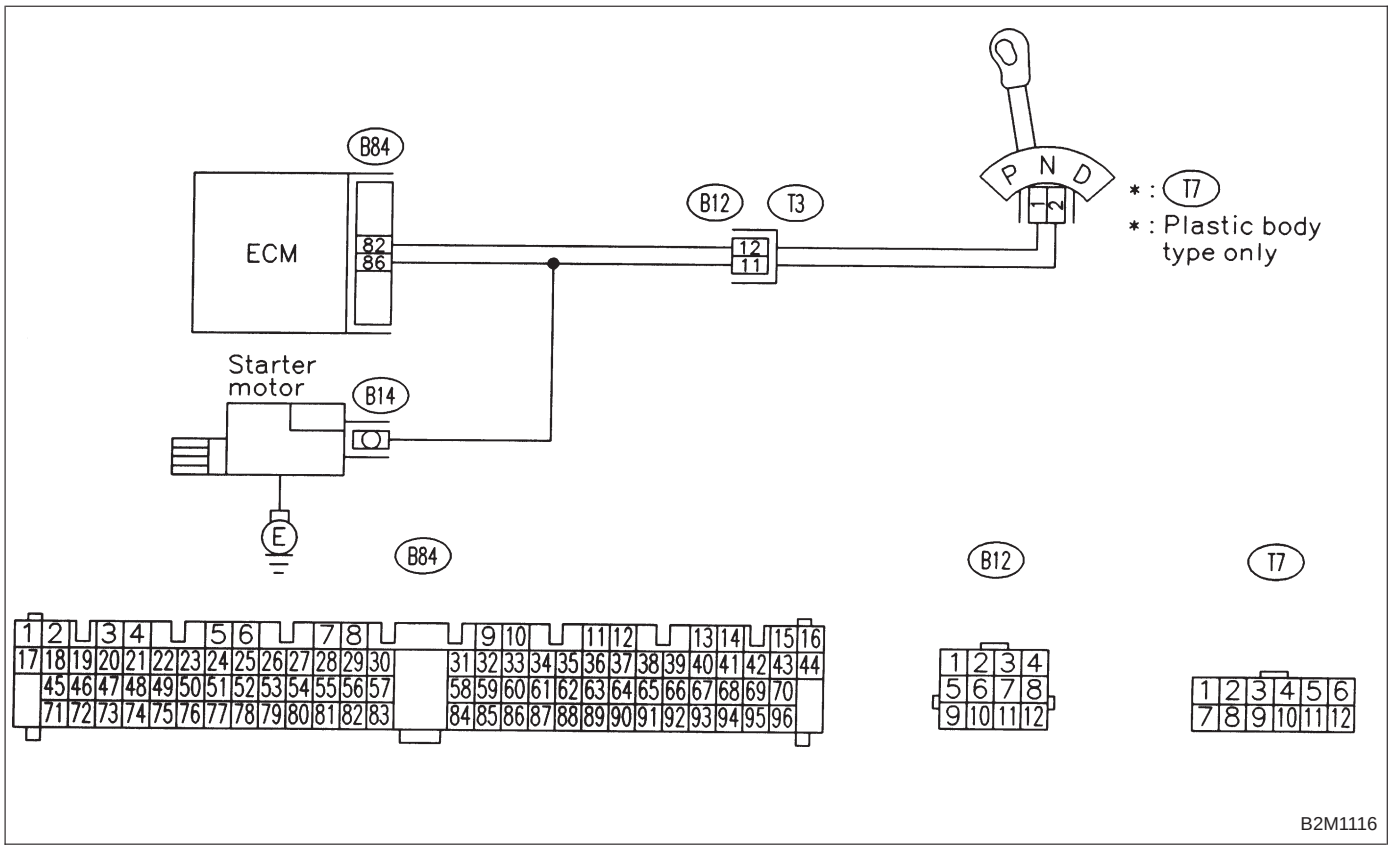

B2M1116

CAUTION:
After repair or replacement of faulty parts, conduct CLEAR MEMORY and INSPECTION MODES.
<Ref. to 2-7 [T3D0] and [T3E0].>

10BZ1	CHECK DTC P0705 ON DISPLAY.

CHECK : ***Does the Subaru select monitor or OBD-II general scan tool indicate DTC P0705?***

YES : Inspect DTC P0705 using “10. Diagnostics Chart with Trouble Code”. <Ref. to 2-7 [T10A0].>

NO : Go to step **10BZ2**.

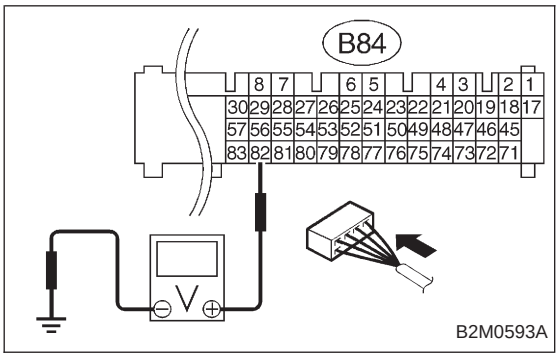

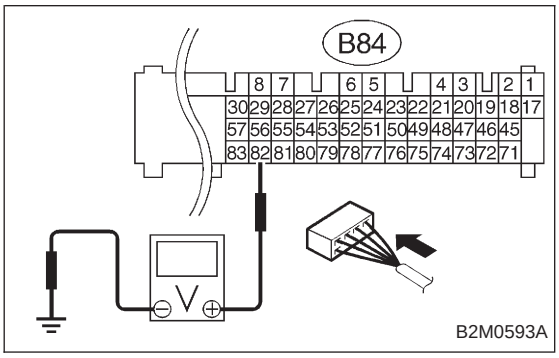

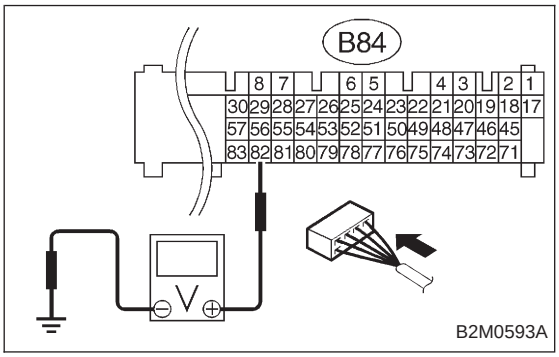

10BZ2	CHECK INPUT SIGNAL FOR ECM.

1) Turn ignition switch to ON.
2) Measure voltage between ECM and chassis ground.

CHECK : ***Connector & terminal (B84) No. 82 (+) — Chassis ground (−): Is the voltage less than 1 V in “N” and “P” positions?***

YES : Go to next CHECK .

NO : Go to step **10BZ3**.

CHECK : ***Connector & terminal (B84) No. 82 (+) — Chassis ground (−): Is the voltage between 4.5 and 5.5 V in other positions?***

YES : Go to next CHECK .

NO : Go to step **10BZ3**.

CHECK : ***Is there poor contact in ECM connector?***

YES : Repair poor contact in ECM connector.

NO : Replace ECM.

10BZ3	CHECK INPUT SIGNAL FOR ECM.

Measure voltage between ECM and chassis ground.

CHECK : ***Connector & terminal (B84) No. 82 (+) — Chassis ground (−): Is the voltage more than 10 V?***

YES : Repair battery short circuit in harness between ECM and inhibitor switch connector.

NO : Go to step **10BZ4**.

10BZ4	CHECK INHIBITOR SWITCH TYPE.

CHECK : ***Is inhibitor switch type plastic body?***

YES : Go to step **10BZ5**.

NO : Go to step **10BZ7**.

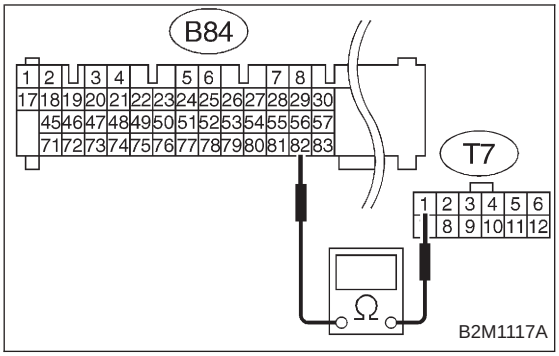

10BZ5	CHECK HARNESS BETWEEN ECM AND INHIBITOR SWITCH.

1) Turn ignition switch to OFF.
2) Disconnect connectors from ECM and inhibitor switch.
3) Measure resistance of harness between ECM and inhibitor switch connector.

CHECK : ***Connector & terminal (B84) No. 82 — (T7) No. 1: Is the resistance less than 1 Ω?***

YES : Go to next step 4).

NO : Repair harness and connector.

NOTE:
In this case, repair the following:
- Open circuit in harness between ECM and inhibitor switch connector
- Poor contact in coupling connector (B12)
- Poor contact in inhibitor switch connector
- Poor contact in ECM connector

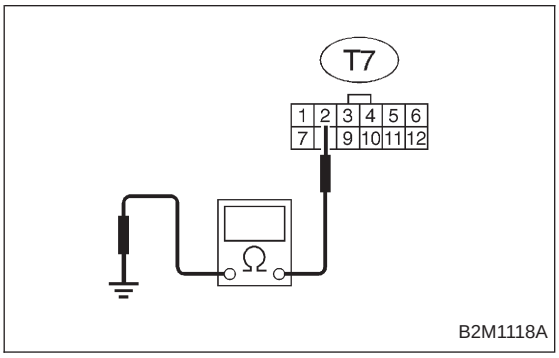

4) Measure resistance of harness between inhibitor switch connector and engine ground.

CHECK : ***Connector & terminal (T7) No. 2 — Engine ground: Is the resistance less than 5 Ω?***

YES : Go to step **10BZ6**.

NO : Repair open circuit in inhibitor switch ground line.

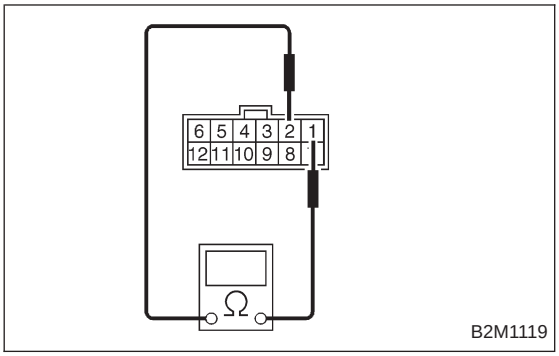

10BZ6	CHECK INHIBITOR SWITCH.

Measure resistance between inhibitor switch connector receptacle's terminals.

CHECK : ***Terminals***
No. 1 — No. 2:
Is the resistance less than 1 Ω in "N" and "P" positions?

YES : Go to next CHECK .

NO : Replace inhibitor switch.

CHECK : ***Is there any fault in selector cable connection to inhibitor switch?***

YES : Repair selector cable connection. <Ref. to 3-2 [W2B2].>

NO : Replace ECM.

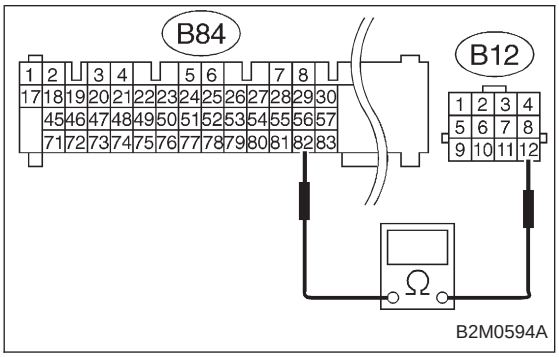

10BZ7	CHECK HARNESS BETWEEN ECM AND TRANSMISSION HARNESS CONNECTOR.

1) Turn ignition switch to OFF.
2) Disconnect connectors from ECM and transmission harness connector.
3) Measure resistance of harness between ECM and transmission harness connector.

CHECK : ***Connector & terminal***
(B84) No. 82 — (B12) No. 12:
Is the resistance less than 1 Ω?

YES : Go to next step 4).

NO : Repair harness and connector.

NOTE:
In this case, repair the following:
- Open circuit in harness between ECM and transmission harness connector
- Poor contact in transmission harness connector
- Poor contact in ECM connector

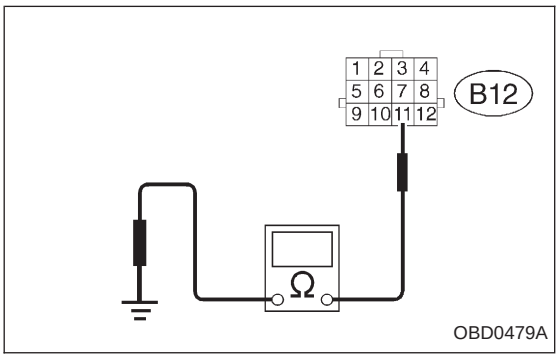

4) Measure resistance of harness between transmission harness connector and engine ground.

CHECK : ***Connector & terminal***
(B12) No. 11 — Engine ground:
Is the resistance less than 5 Ω?

YES : Go to step **10BZ8**.

NO : Repair open circuit in inhibitor switch ground line.

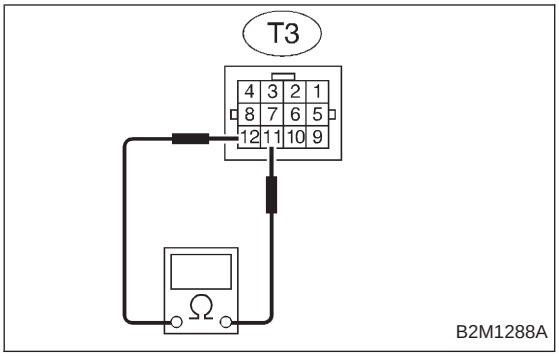

10BZ8	CHECK INHIBITOR SWITCH.

Measure resistance between transmission harness connector receptacle's terminals.

CHECK : ***Connector & terminal (T3) No. 12 — No. 11: Is the resistance less than 1 Ω in "N" and "P" positions?***

YES : Go to next CHECK .

NO : Replace inhibitor switch.

CHECK : ***Is there any fault in selector cable connection to inhibitor switch?***

YES : Repair selector cable connection. <Ref. to 3-2 [W2B2].>

NO : Replace ECM.

OBD	(FB1)
P1102	

OBD0481

CA: DTC P1102 — PRESSURE SOURCES SWITCHING SOLENOID VALVE CIRCUIT LOW INPUT —

DTC DETECTING CONDITION:

- Two consecutive driving cycles with fault

TROUBLE SYMPTOM:

- Erroneous idling
- Failure of engine to start

WIRING DIAGRAM:

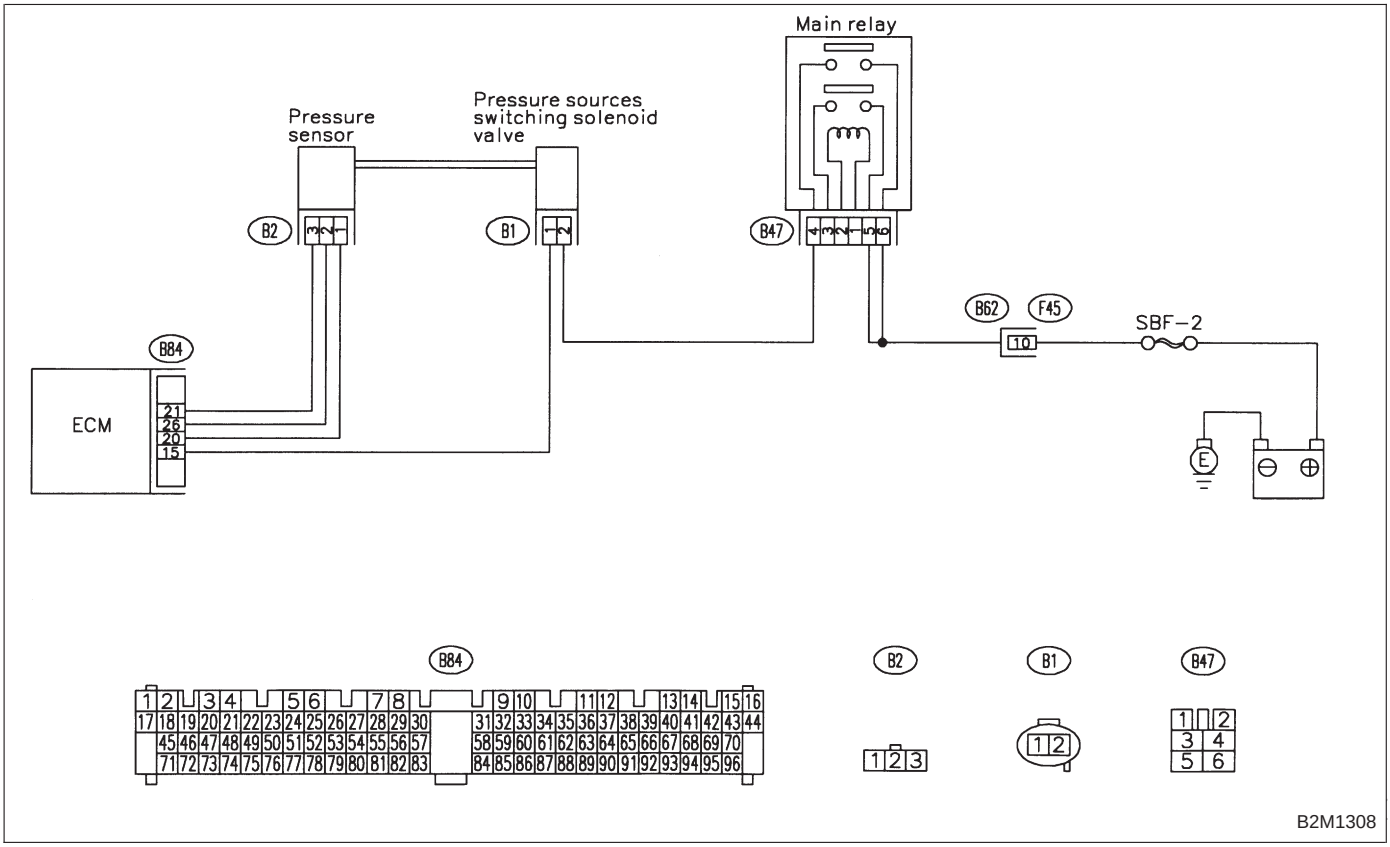

CAUTION:
After repair or replacement of faulty parts, conduct CLEAR MEMORY and INSPECTION MODE.
<Ref. to 2-7 [T3D0] and [T3E0].>

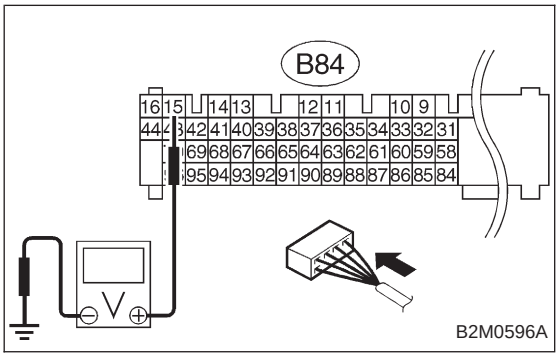

10CA1	CHECK OUTPUT SIGNAL FROM ECM.

1) Turn ignition switch to ON.
2) Measure voltage between ECM and chassis ground.

CHECK : ***Connector & terminal (B84) No. 15 (+) — Chassis ground (−): Is the voltage more than 10 V?***

YES : Go to next CHECK .

NO : Go to step **10CA2**.

CHECK : ***Is there poor contact in ECM connector?***

YES : Repair poor contact in ECM connector.

NO : Contact with SOA service.

NOTE:
Inspection by DTM is required, because probable cause is deterioration of multiple parts.

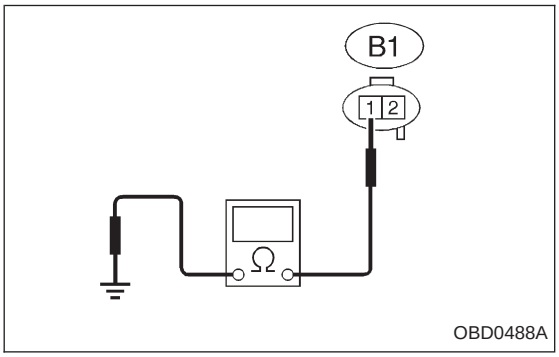

10CA2	CHECK HARNESS BETWEEN ECM AND PRESSURE SOURCES SWITCHING SOLENOID VALVE CONNECTOR.

1) Turn ignition switch to OFF.
2) Disconnect connector from pressure sources switching solenoid valve and ECM.
3) Measure resistance of harness between pressure sources switching solenoid valve connector and engine ground.

CHECK : ***Connector & terminal***
(B1) No. 1 — Engine ground:
Is the resistance less than 10 Ω?

YES : Repair ground short circuit in harness between ECM and pressure sources switching solenoid valve connector.

NO : Go to next step 4).

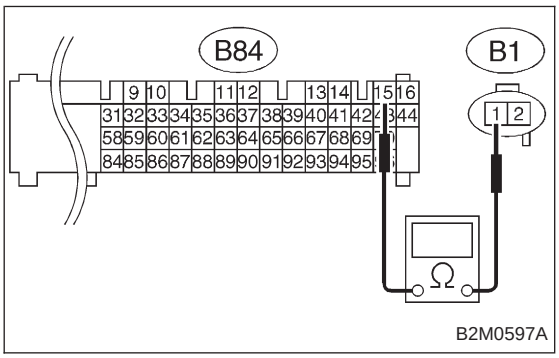

4) Measure resistance of harness between ECM and pressure sources switching solenoid valve connector.

CHECK : ***Connector & terminal***
(B84) No. 15 — (B1) No. 1:
Is the resistance less than 1 Ω?

YES : Go to step **10CA3**.

NO : Repair open circuit in harness between ECM and pressure sources switching solenoid valve connector.

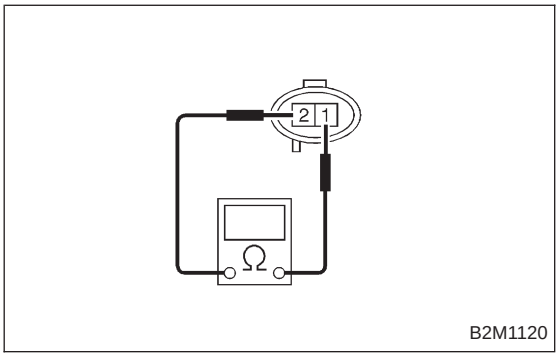

10CA3	CHECK PRESSURE SOURCES SWITCHING SOLENOID VALVE.

Measure resistance between pressure sources switching solenoid valve connector terminals.

CHECK : ***Terminals***
No. 1 — No. 2:
Is the resistance between 10 and 100 Ω?

YES : Go to step **10CA4**.

NO : Replace pressure sources switching solenoid valve.

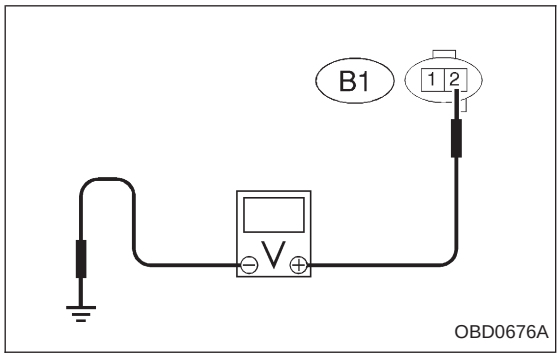

10CA4	CHECK POWER SUPPLY TO PRESSURE SOURCES SWITCHING SOLENOID VALVE.

1) Turn ignition switch to ON.
2) Measure voltage between pressure sources switching solenoid valve harness connector and engine ground.

CHECK : ***Connector & terminal (B1) No. 2 (+) — Engine ground (−): Is the voltage more than 10 V?***

YES : Go to next CHECK .

NO : Repair open circuit in harness between main relay and pressure sources switching solenoid valve connector.

CHECK : ***Is there poor contact in pressure sources switching solenoid valve connector?***

YES : Repair poor contact in pressure sources switching solenoid valve connector.

NO : Contact with SOA service.

NOTE:
Inspection by DTM is required, because probable cause is deterioration of multiple parts.

OBD	(FB1)
P1103	<TRQ>

OBD0489

CB: DTC P1103 — ENGINE TORQUE CONTROL SIGNAL CIRCUIT MALFUNCTION —

DTC DETECTING CONDITION:

- Two consecutive driving cycles with fault

TROUBLE SYMPTOM:

- Excessive shift shock

WIRING DIAGRAM:

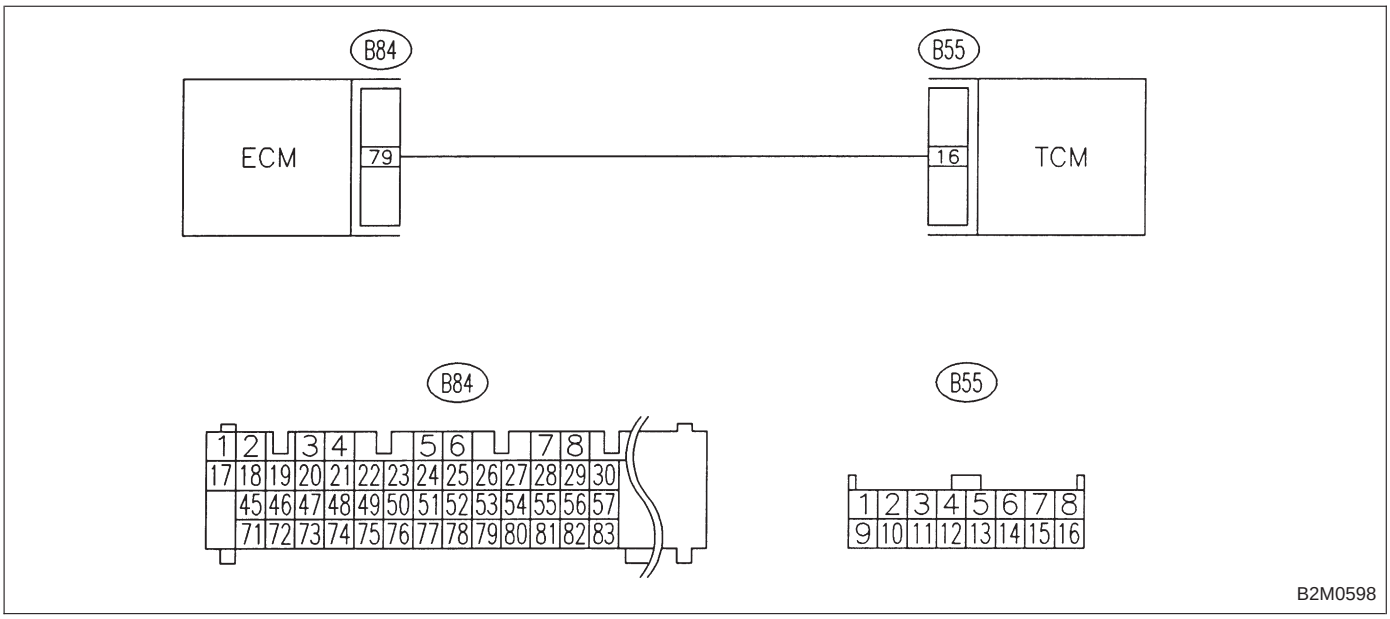

CAUTION:
After repair or replacement of faulty parts, conduct CLEAR MEMORY and INSPECTION MODES.
<Ref. to 2-7 [T3D0] and [T3E0].>

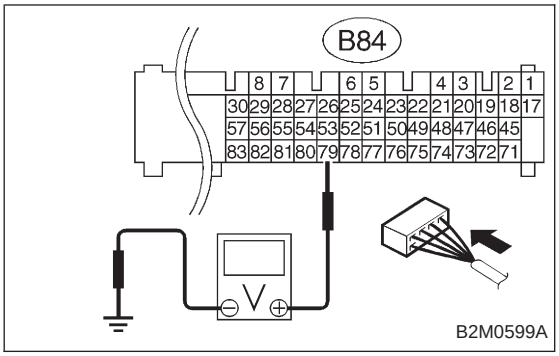

10CB1	CHECK INPUT SIGNAL FOR ECM.

1) Turn ignition switch to ON.
2) Measure voltage between ECM and chassis ground.

CHECK : ***Connector & terminal (B84) No. 79 (+) — Chassis ground (−): Is the voltage more than 4.5 V?***

YES : Go to next CHECK .

NO : Go to step **10CB2**.

CHECK : ***Is there poor contact in ECM connector?***

YES : Repair poor contact in ECM connector.

NO : Replace ECM.

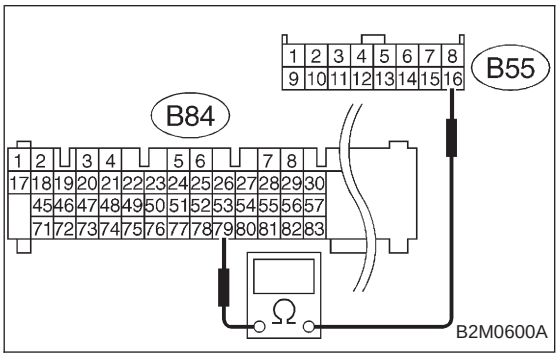

10CB2	CHECK HARNESS BETWEEN ECM AND TCM CONNECTOR.

1) Turn ignition switch to OFF.
2) Disconnect connectors from ECM and TCM.
3) Measure resistance of harness between ECM and TCM connector.

CHECK : ***Connector & terminal (B84) No. 79 — (B55) No. 16: Is the resistance less than 1 Ω?***

YES : Go to next step 4).

NO : Repair open circuit in harness between ECM and TCM connector.

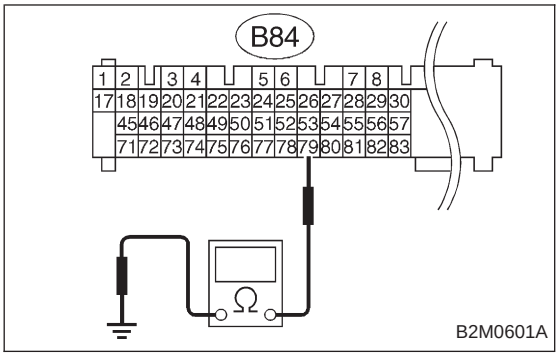

4) Measure resistance of harness between ECM and chassis ground.

CHECK : ***Connector & terminal (B84) No. 79 — Chassis ground: Is the resistance less than 10 Ω?***

YES : Repair ground short circuit in harness between ECM and TCM connector.

NO : Go to next CHECK .

CHECK : ***Is there poor contact in TCM connector?***

YES : Repair poor contact in TCM connector.

NO : Replace TCM.

OBD (FB1)

P1104 <TCS_LOW>

B2M1121

CC: DTC P1104
— TCS SIGNAL CIRCUIT LOW INPUT —

DTC DETECTING CONDITION:

- Two consecutive driving cycles with fault

TROUBLE SYMPTOM:

- No operation TCS
- TCS warning light remains illuminated.

WIRING DIAGRAM:

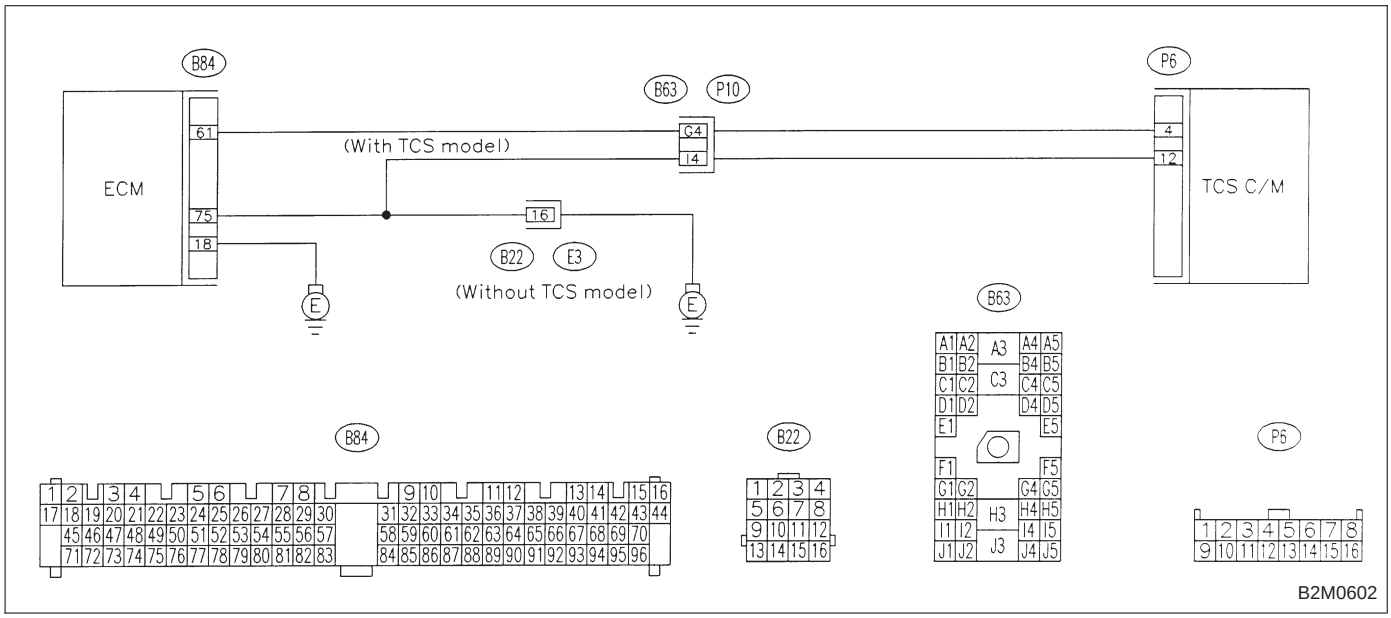

CAUTION:
After repair or replacement of faulty parts, conduct CLEAR MEMORY and INSPECTION MODES.
<Ref. to 2-7 [T3D0] and [T3E0].>

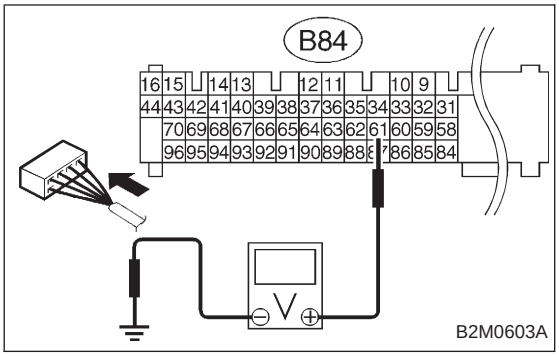

10CC1	CHECK OUTPUT SIGNAL FROM ECM.

1) Turn ignition switch to ON.
2) Measure voltage between ECM and chassis ground.

CHECK : ***Connector & terminal (B84) No. 61 (+) — Chassis ground (−): Is the voltage more than 2 V?***

YES : Repair poor contact in ECM connector.

NO : Go to step **10CC2**.

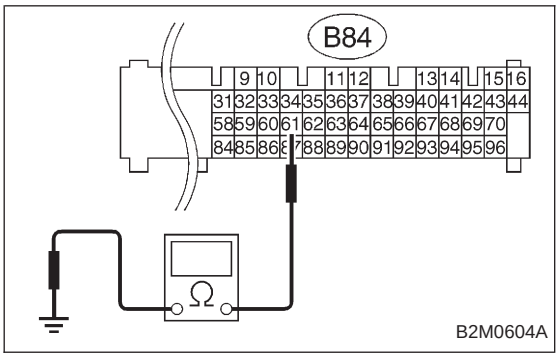

10CC2	CHECK HARNESS BETWEEN ECM AND TCS C/M CONNECTOR.

1) Turn ignition switch to OFF.
2) Remove front passenger side seat.
3) Tear off the floor mat.
4) Disconnect connectors from ECM and TCS C/M.
5) Measure resistance of harness between ECM and chassis ground.

CHECK : ***Connector & terminal (B84) No. 61 — Chassis ground: Is the resistance less than 10 Ω?***

YES : Repair ground short circuit in harness between ECM and TCS C/M connector.

NO : Replace TCS C/M.

OBD (FB1)

P1120 <ST_SWON>

B2M1122

CD: DTC P1120 — STARTER SWITCH CIRCUIT HIGH INPUT —

DTC DETECTING CONDITION:

- Two consecutive driving cycles with fault

TROUBLE SYMPTOM:

- Failure of engine to start

WIRING DIAGRAM:

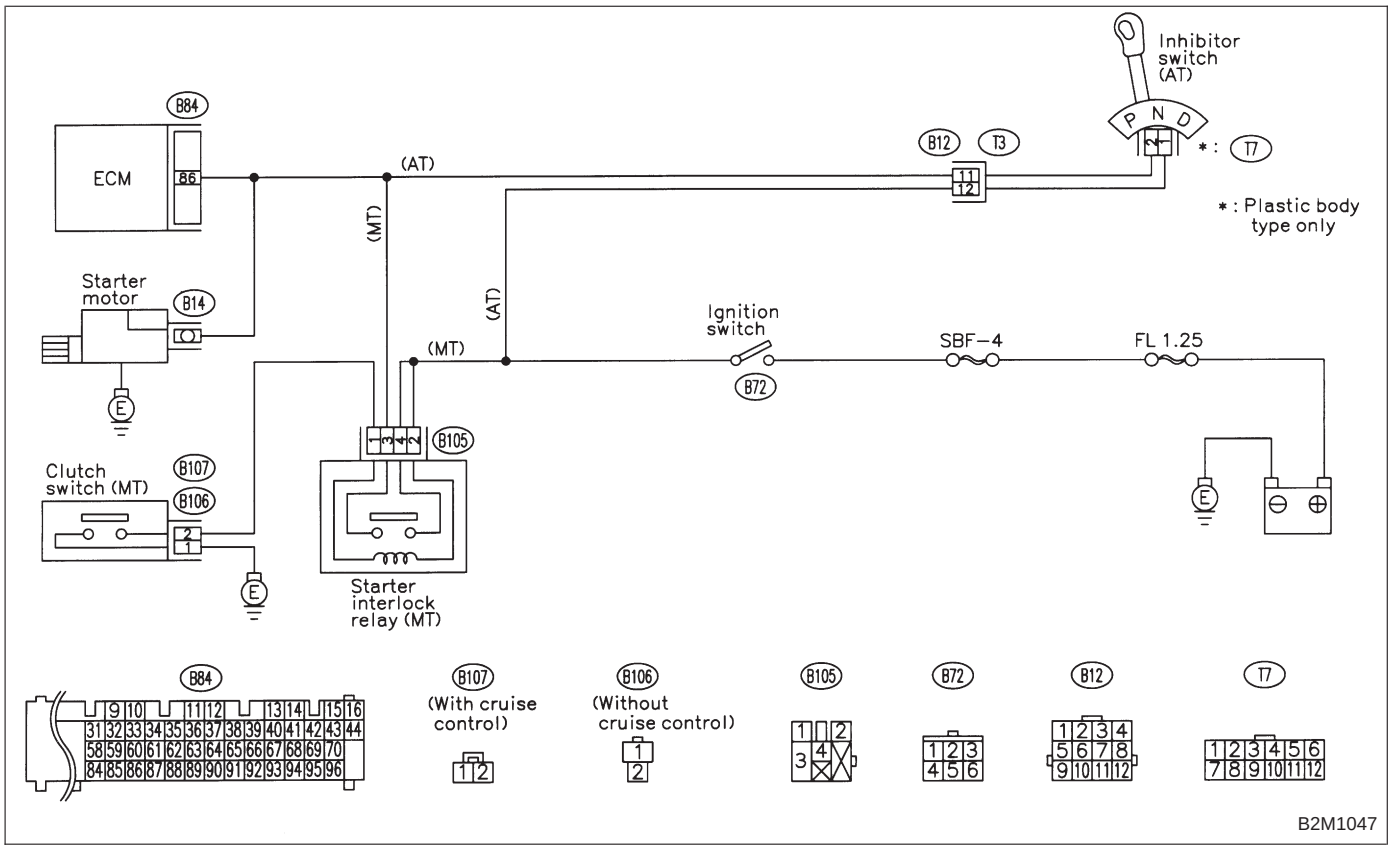

B2M1047

CAUTION:
After repair or replacement of faulty parts, conduct CLEAR MEMORY and INSPECTION MODES.
<Ref. to 2-7 [T3D0] and [T3E0].>

10CD1	CHECK OPERATION OF STARTER MOTOR.

CHECK ***: Does starter motor operate when ignition switch to "ON"?***

NOTE:
- On AT vehicles, place the inhibitor switch in each position.
- On MT vehicles, depress or release the clutch pedal.

YES : Repair battery short circuit in starter motor circuit. After repair, replace ECM.

NO : Check starter motor circuit. <Ref. to 2-7 [T8B0].>

OBD (FB1)

P1121 <N_SWON>

B2M1123

CE: DTC P1121 — NEUTRAL POSITION SWITCH CIRCUIT LOW INPUT [AT VEHICLES] —

DTC DETECTING CONDITION:

- Two consecutive driving cycles with fault

TROUBLE SYMPTOM:

- Erroneous idling

WIRING DIAGRAM:

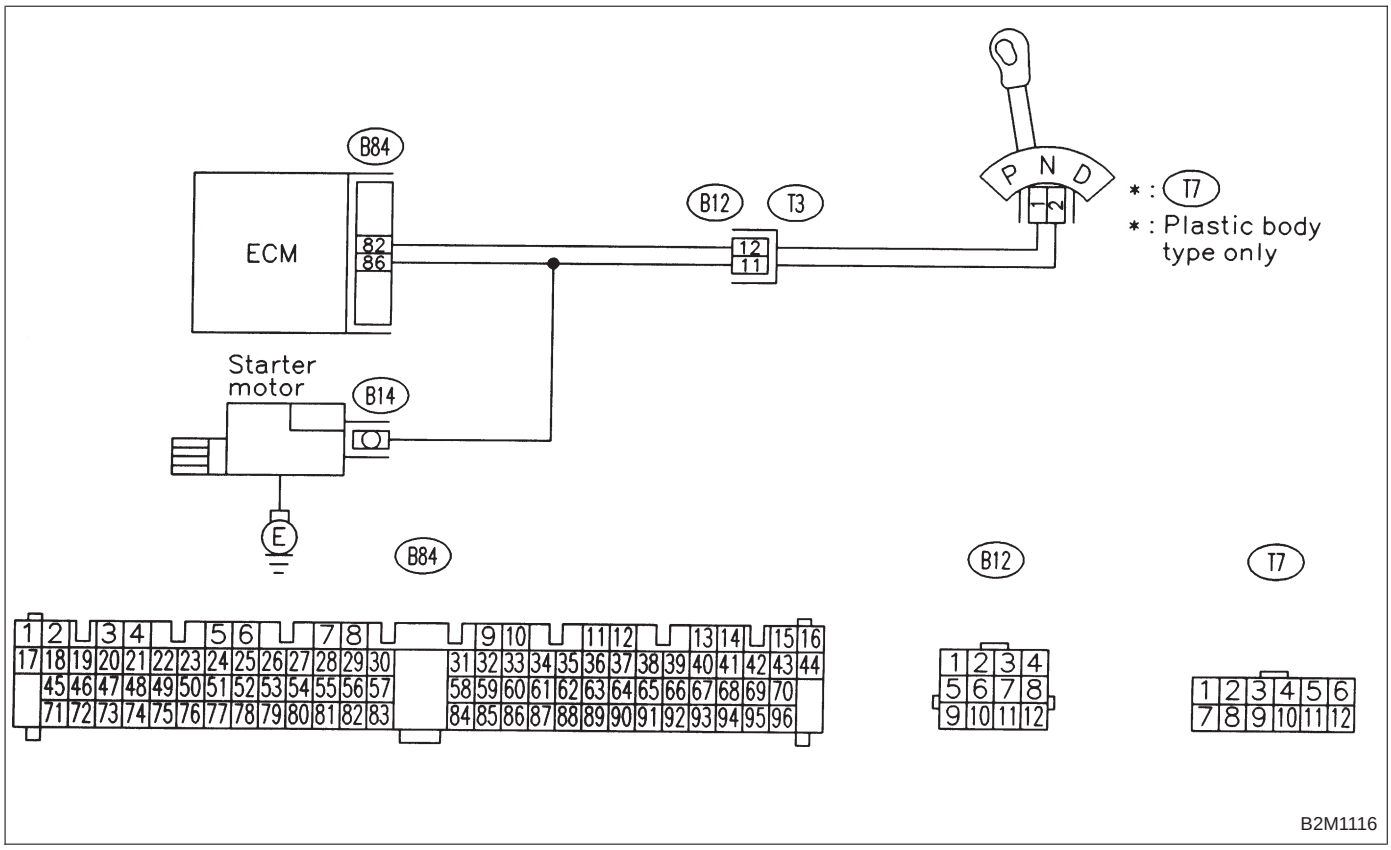

B2M1116

CAUTION:
After repair or replacement of faulty parts, conduct CLEAR MEMORY and INSPECTION MODES.
<Ref. to 2-7 [T3D0] and [T3E0].>

10CE1	CHECK DTC P0705 ON DISPLAY.

CHECK : ***Does the Subaru select monitor or OBD-II general scan tool indicate DTC P0705?***

YES : Inspect DTC P0705 using “10. Diagnostics Chart with Trouble Code”. <Ref. to 2-7 [T10A0].>

NO : Go to step **10CE2**.

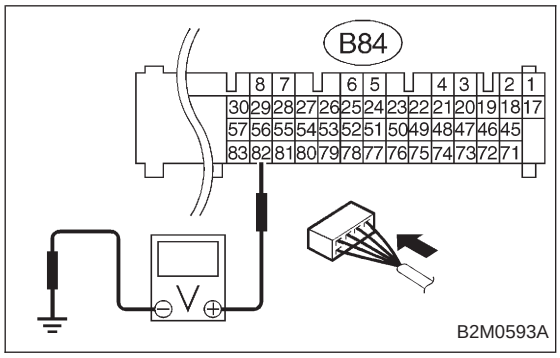

10CE2	CHECK INPUT SIGNAL FOR ECM.

1) Turn ignition switch to ON.
2) Measure voltage between ECM and chassis ground.

CHECK : ***Connector & terminal (B84) No. 82 (+) — Chassis ground (−): Is the voltage between 4.5 and 5.5 V in other positions?***

YES : Even if MIL lights up, the circuit has returned to a normal condition at this time.

NO : Go to step **10CE3**.

10CE3	CHECK INHIBITOR SWITCH TYPE.

CHECK : ***Is inhibitor switch type plastic body?***

YES : Go to step **10CE4**.

NO : Go to step **10CE7**.

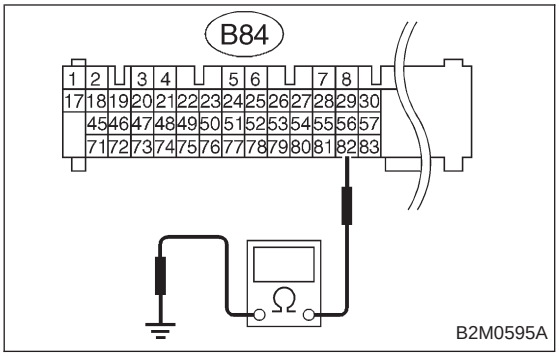

10CE4	CHECK HARNESS BETWEEN ECM AND TRANSMISSION HARNESS CONNECTOR.

1) Turn ignition switch to OFF.
2) Disconnect connectors from ECM and transmission harness connector.
3) Measure resistance of harness between ECM connector and chassis ground.

CHECK : ***Connector & terminal (B84) No. 82 — Chassis ground: Is the resistance less than 10 Ω?***

YES : Repair ground short circuit in harness between ECM and transmission harness connector.

NO : Go to step **10CE5**.

10CE5	CHECK TRANSMISSION HARNESS CONNECTOR.

1) Disconnect connector from inhibitor switch.
2) Measure resistance of harness between transmission harness connector and engine ground.

CHECK : ***Connector & terminal (T3) No. 12 — Engine ground: Is the resistance less than 10 Ω?***

YES : Repair ground short circuit in harness between transmission harness and inhibitor switch connector.

NO : Go to step **10CE6**.

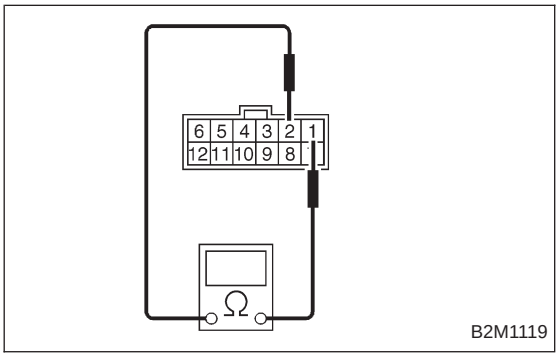

10CE6	CHECK INHIBITOR SWITCH.

Measure resistance between inhibitor switch connector receptacle's terminals.

CHECK : ***Terminals No. 1 — No. 2: Is the resistance more than 1 MΩ in other positions?***

YES : Go to next CHECK .

NO : Replace inhibitor switch.

CHECK : ***Is there any fault in selector cable connection to inhibitor switch?***

YES : Repair selector cable connection. <Ref. to 3-2 [W2B2].>

NO : Contact with SOA service.

NOTE:
Inspection by DTM is required, because probable cause is deterioration of multiple parts.

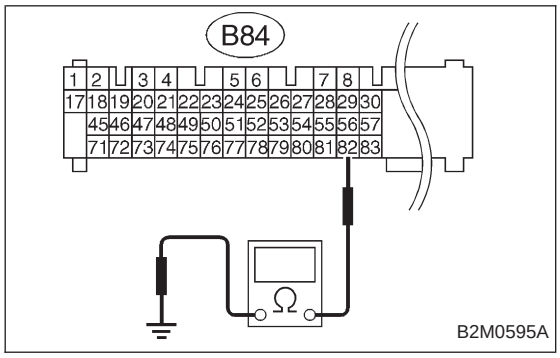

10CE7	CHECK HARNESS BETWEEN ECM AND TRANSMISSION HARNESS CONNECTOR.

1) Turn ignition switch to OFF.
2) Disconnect connectors from ECM and transmission harness connector.
3) Measure resistance of harness between ECM and chassis ground.

CHECK : ***Connector & terminal (B84) No. 82 — Chassis ground: Is the resistance less than 10 Ω?***

YES : Repair short circuit in harness between ECM and transmission harness connector.

NO : Go to step **10CE8**.

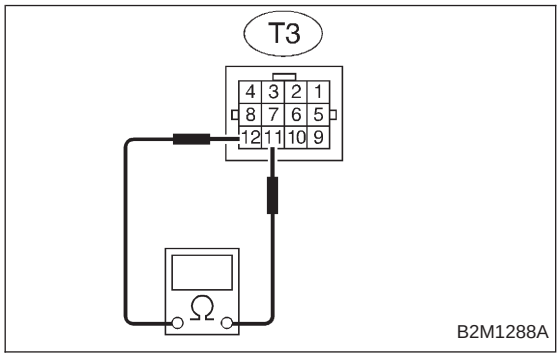

10CE8	CHECK INHIBITOR SWITCH.

Measure resistance between transmission harness connector receptacle's terminals.

CHECK : ***Connector & terminal (T3) No. 12 — No. 11: Is the resistance more than 1 MΩ in other positions?***

YES : Go to next CHECK .

NO : Replace inhibitor switch.

CHECK : ***Is there any fault in selector cable connection to inhibitor switch?***

YES : Repair selector cable connection. <Ref. to 3-2 [W2B2].>

NO : Contact with SOA service.

NOTE:
Inspection by DTM is required, because probable cause is deterioration of multiple parts.

OBD (FB1)

P1122 <BR_HI>

B2M1124

CF: DTC P1122 — PRESSURE SOURCES SWITCHING SOLENOID VALVE CIRCUIT HIGH INPUT —

DTC DETECTING CONDITION:

- Two consecutive driving cycles with fault

TROUBLE SYMPTOM:

- Erroneous idling
- Failure of engine to start

WIRING DIAGRAM:

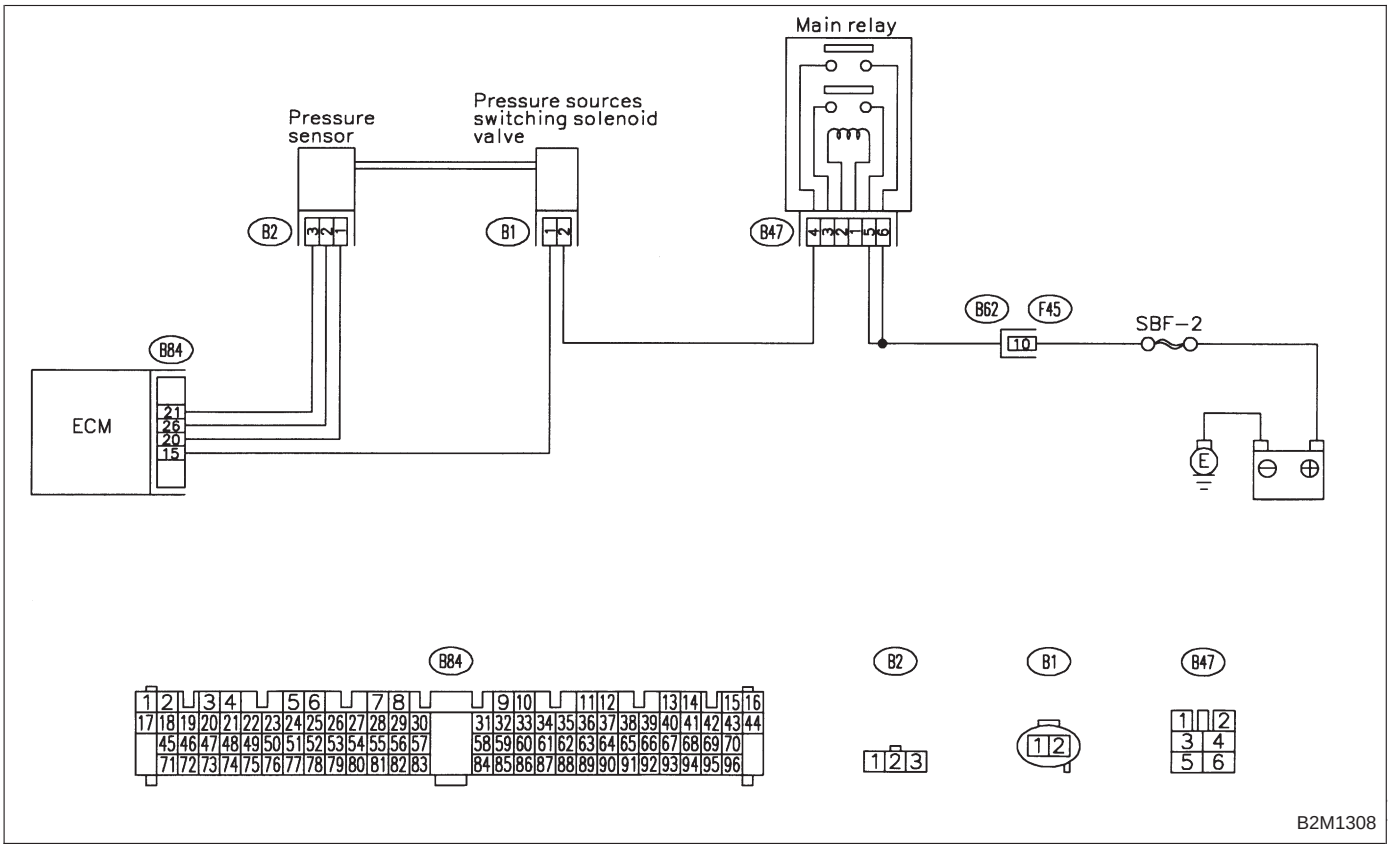

CAUTION:
After repair or replacement of faulty parts, conduct CLEAR MEMORY and INSPECTION MODE.
<Ref. to 2-7 [T3D0] and [T3E0].>

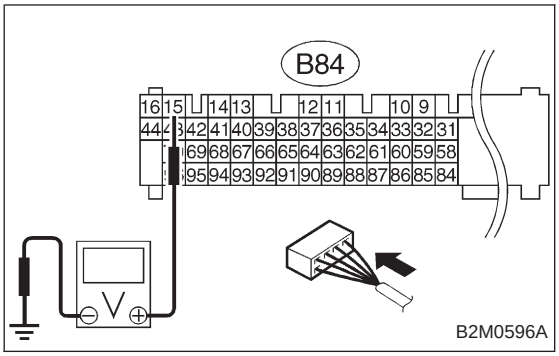

10CF1	CHECK OUTPUT SIGNAL FROM ECM.

1) Turn ignition switch to ON.
2) Measure voltage between ECM and chassis ground.

CHECK : ***Connector & terminal (B84) No. 15 (+) — Chassis ground (−): Is the voltage more than 10 V?***

YES : Go to step **10CF2**.

NO : Go to next CHECK .

CHECK : ***Is there poor contact in ECM connector?***

YES : Repair poor contact in ECM connector.

NO : Replace ECM.

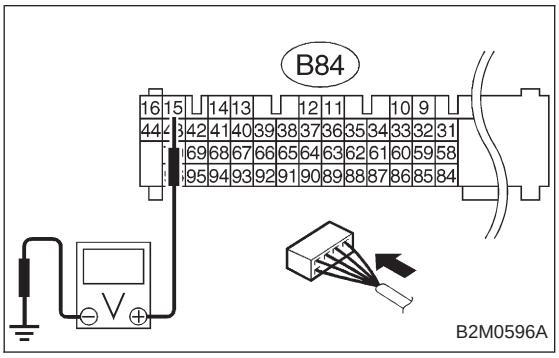

10CF2	CHECK HARNESS BETWEEN ECM AND PRESSURE SOURCES SWITCHING SOLENOID VALVE CONNECTOR.

1) Turn ignition switch to OFF.
2) Disconnect connector from pressure sources switching solenoid valve.
3) Turn ignition switch to ON.
4) Measure voltage between ECM and chassis ground.

CHECK : ***Connector & terminal (B84) No. 15 (+) — Chassis ground (−): Is the voltage more than 10 V?***

YES : Repair battery short circuit in harness between ECM and pressure sources switching solenoid valve connector. After repair, replace ECM.

NO : Go to next step 5).

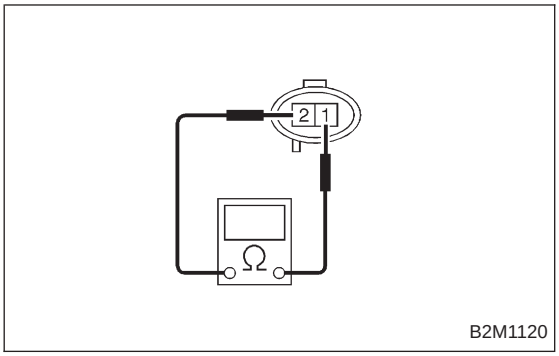

5) Turn ignition switch to OFF.
6) Measure resistance between pressure sources switching solenoid valve connector terminals.

CHECK ***: Terminals No. 1 — No. 2: Is the resistance less than 1 Ω?***

YES : Replace pressure sources switching solenoid valve and ECM.

NO : Go to next CHECK .

CHECK ***: Is there poor contact in ECM connector?***

YES : Repair poor contact in ECM connector.

NO : Replace ECM.

OBD (FB1)

P1124 <TCS_HI>

B2M1125

CG: DTC P1124
— TCS SIGNAL CIRCUIT HIGH INPUT —

DTC DETECTING CONDITION:

- Two consecutive driving cycles with fault

TROUBLE SYMPTOM:

- No operation TCS
- TCS warning light remains illuminated.

WIRING DIAGRAM:

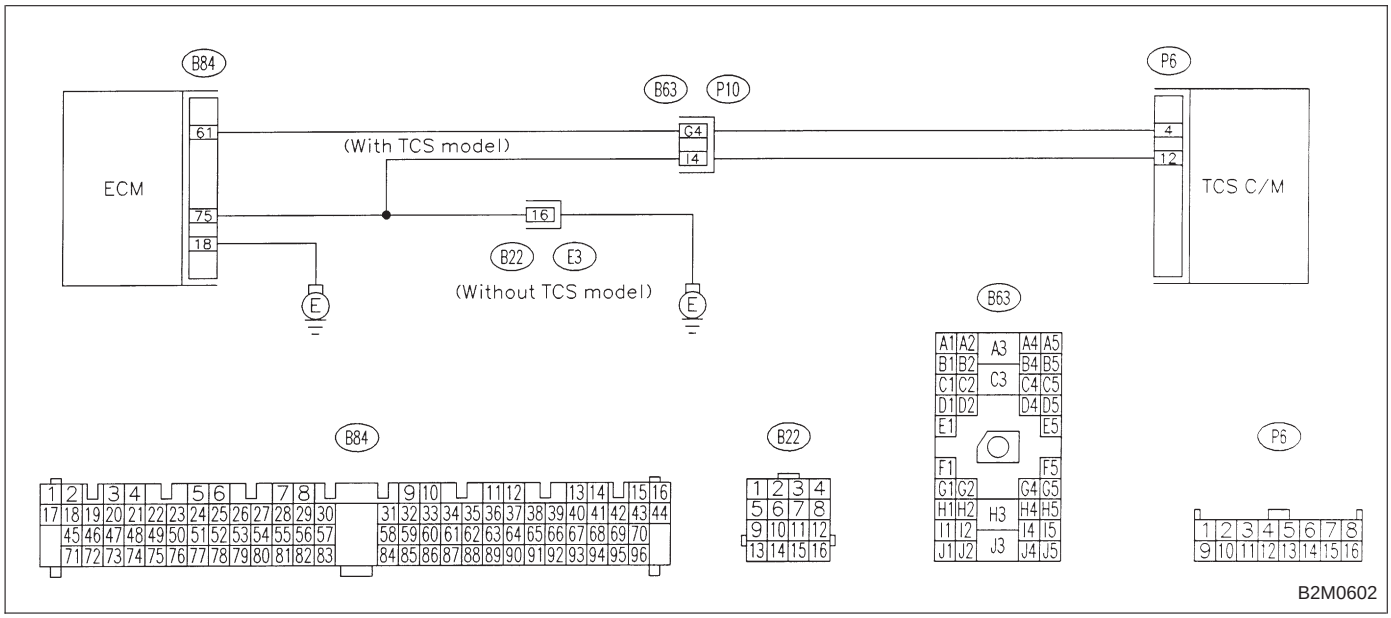

CAUTION:
After repair or replacement of faulty parts, conduct CLEAR MEMORY and INSPECTION MODES.
<Ref. to 2-7 [T3D0] and [T3E0].>

10CG1	CHECK IF THE VEHICLE IS EQUIPPED WITH TCS.

CHECK : ***Is the vehicle equipped with TCS?***

YES : Go to step **10CG2**.

NO : Go to step **10CG5**.

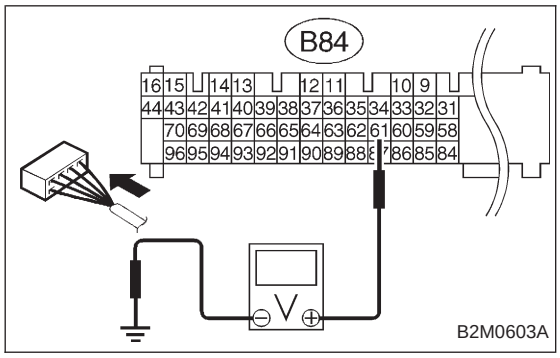

10CG2	CHECK OUTPUT SIGNAL FROM ECM.

1) Turn ignition switch to ON.
2) Measure voltage between ECM and chassis ground.

CHECK : ***Connector & terminal (B84) No. 61 (+) — Chassis ground (−): Is the voltage more than 2 V?***

YES : Go to step **10CG3**.

NO : Go to step **10CG4**.

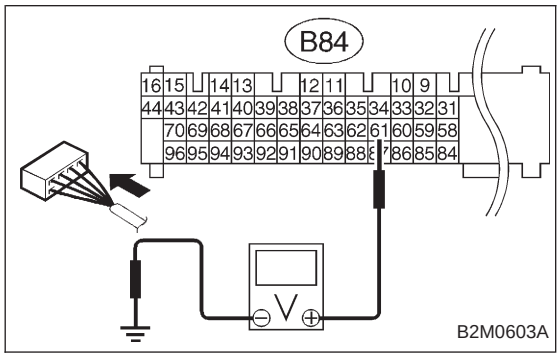

10CG3	CHECK HARNESS BETWEEN ECM AND TCS C/M CONNECTOR.

1) Turn ignition switch to OFF.
2) Remove front passenger side seat.
3) Tear off the floor mat.
4) Disconnect connectors from ECM and TCS C/M.
5) Measure voltage between ECM connector and chassis ground.

CHECK : ***Connector & terminal (B84) No. 61 (+) — Chassis ground (−): Is the voltage more than 10 V?***

YES : Repair battery short circuit in harness between ECM and TCS C/M connector.

NO : Go to next step 6).

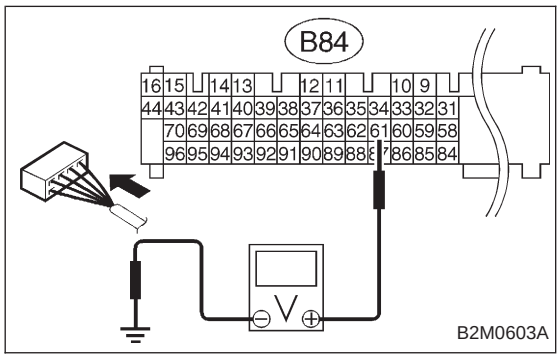

6) Turn ignition switch to ON.
7) Measure voltage between ECM connector and chassis ground.

CHECK : ***Connector & terminal (B84) No. 61 (+) — Chassis ground (−): Is the voltage more than 10 V?***

YES : Repair battery short circuit in harness between ECM and TCS C/M connector.

NO : Repair poor contact in ECM connector.

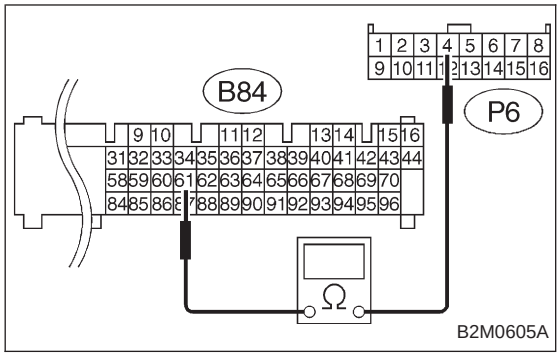

10CG4	CHECK HARNESS BETWEEN ECM AND TCS C/M CONNECTOR.

1) Turn ignition switch to OFF.
2) Remove front passenger side seat.
3) Tear off the floor mat.
4) Disconnect connectors from ECM and TCS C/M.
5) Measure resistance of harness between ECM and TCS C/M connector.

CHECK : ***Connector & terminal (B84) No. 61 — (P6) No. 4: Is the resistance less than 1 Ω?***

YES : Repair poor contact in TCS C/M connector.

NO : Repair harness and connector.

NOTE:
In this case, repair the following:
- Open circuit in harness between ECM and TCS C/M connector
- Poor contact in ECM connector
- Poor contact in TCS C/M connector
- Poor contact in S.M.J. connector (B63)

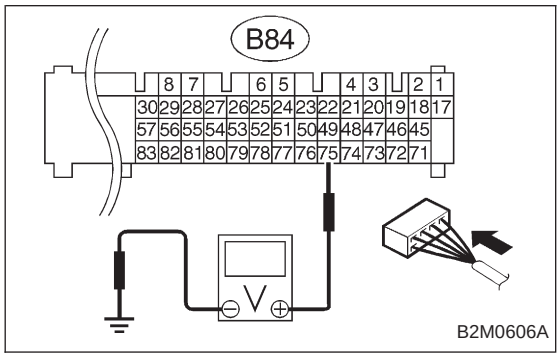

10CG5	CHECK ECM CONNECTOR.

1) Turn ignition switch to ON.
2) Measure voltage between ECM and chassis ground.

CHECK : ***Connector & terminal (B84) No. 75 (+) — Chassis ground (−): Is the voltage more than 2 V?***

YES : Repair harness and connector.

NOTE:
In this case, repair the following:
- Open circuit in harness between ECM connector and engine grounding terminal
- Poor contact in engine grounding terminal
- Poor contact in coupling connector (B22)

NO : Repair poor contact in ECM connector.

OBD (FB1)

P1141 <QA_RHI>

B2M1126

CH: DTC P1141 — MASS AIR FLOW SENSOR CIRCUIT RANGE/PERFORMANCE PROBLEM (HIGH INPUT) —

DTC DETECTING CONDITION:

- Two consecutive driving cycles with fault

TROUBLE SYMPTOM:

- Erroneous idling
- Engine stalls.
- Poor driving performance

WIRING DIAGRAM:

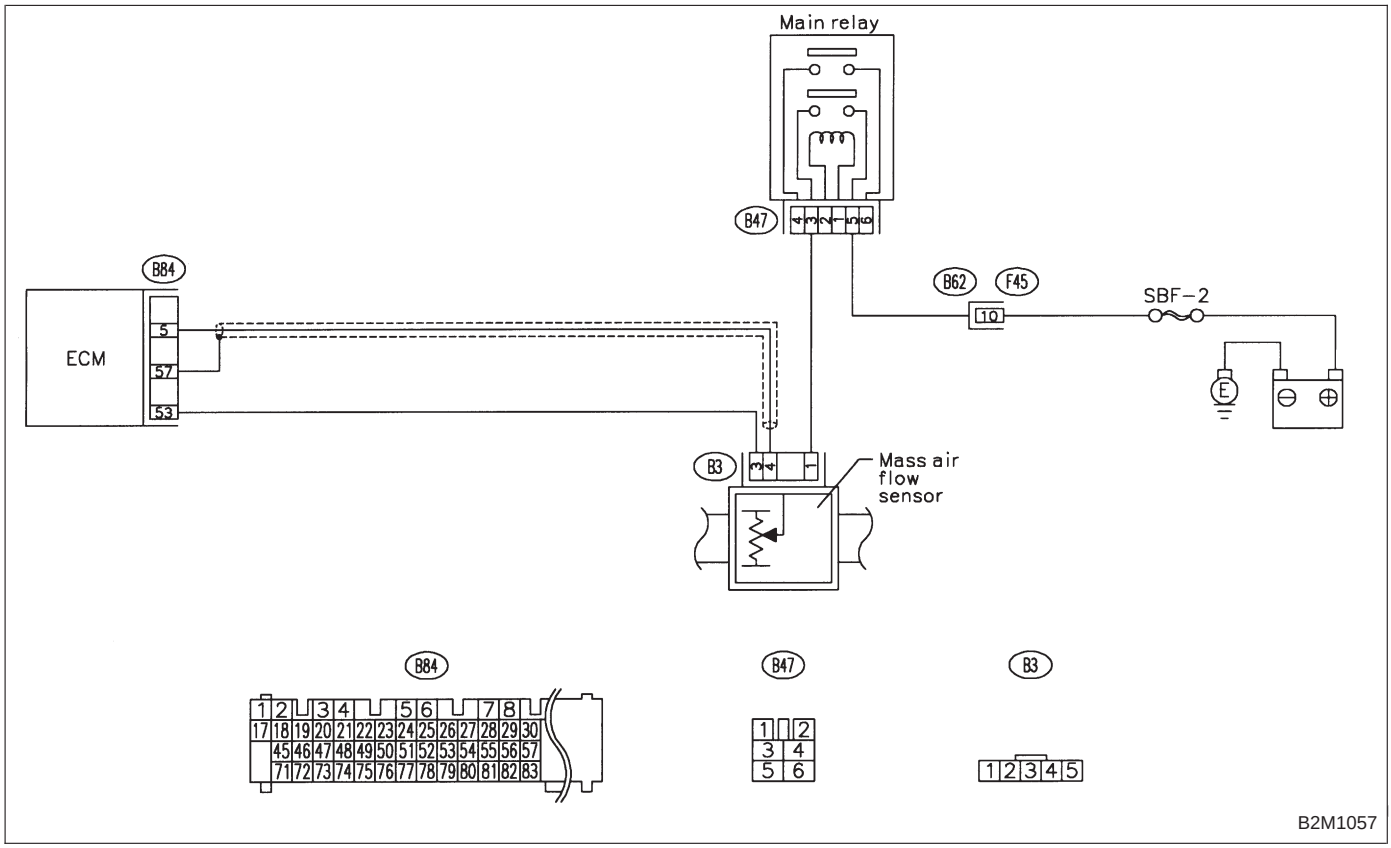

CAUTION:
After repair or replacement of faulty parts, conduct CLEAR MEMORY and INSPECTION MODES.
<Ref. to 2-7 [T3D0] and [T3E0].>

10CH1	CHECK DTC P0102 OR P0103 ON DISPLAY.

CHECK : ***Does the Subaru select monitor or OBD-II general scan tool indicate DTC P0102 or P0103?***

YES : Inspect DTC P0102 or P0103 using “10. Diagnostics Chart with Trouble Code”. <Ref. to 2-7 [T10A0].>

NOTE:
In this case, it is not necessary to inspect DTC P1141.

NO : Replace mass air flow sensor.

OBD (FB1)

P1142 <TH_RLOW>

B2M1127

CI: DTC P1142 — THROTTLE POSITION SENSOR CIRCUIT RANGE/PERFORMANCE PROBLEM (LOW INPUT) —

DTC DETECTING CONDITION:

- Two consecutive driving cycles with fault

TROUBLE SYMPTOM:

- Erroneous idling
- Engine stalls.
- Poor driving performance

WIRING DIAGRAM:

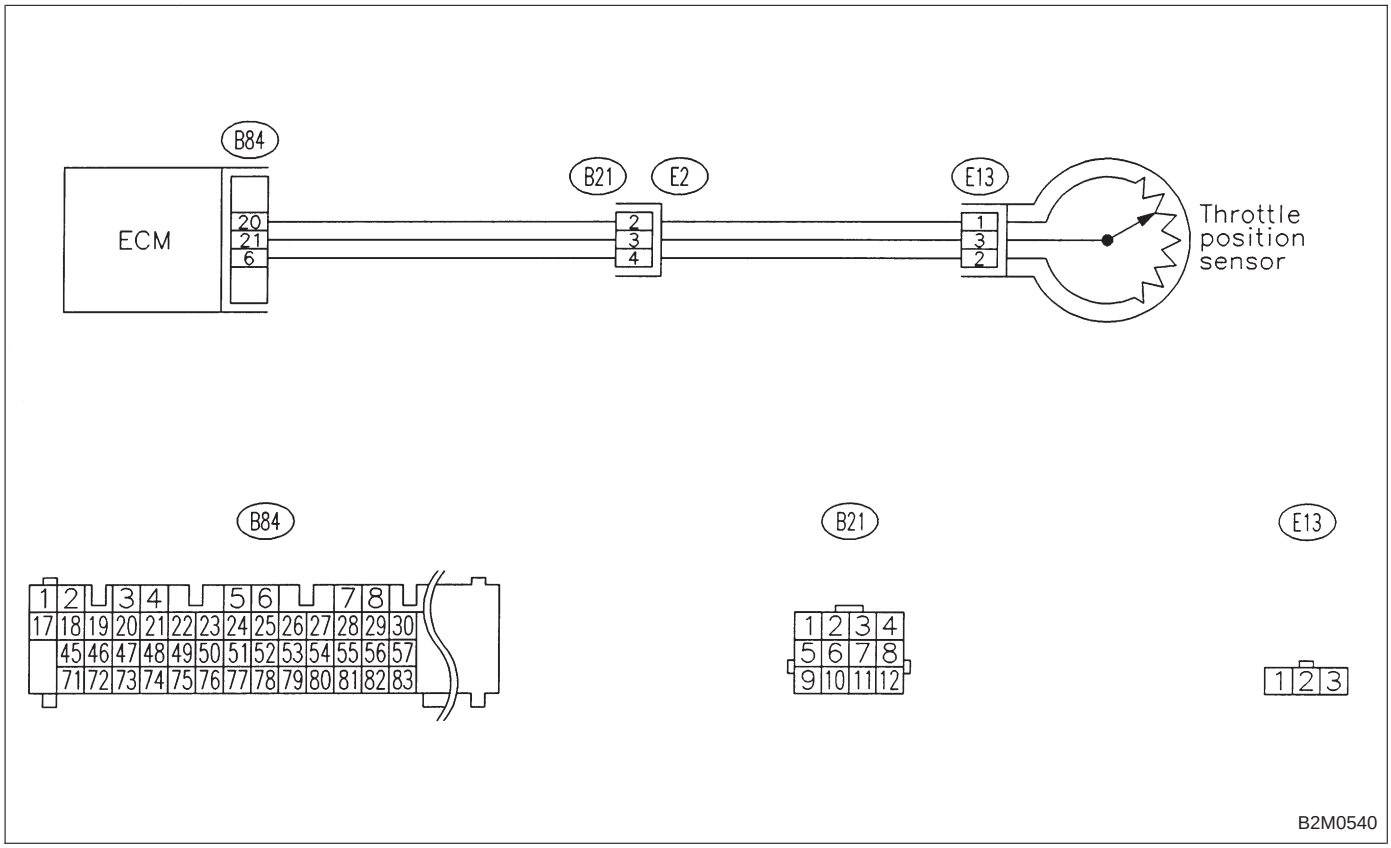

CAUTION:
After repair or replacement of faulty parts, conduct CLEAR MEMORY and INSPECTION MODES.
<Ref. to 2-7 [T3D0] and [T3E0].>

10CI1	CHECK DTC P0122 OR P0123 ON DISPLAY.

CHECK : ***Does the Subaru select monitor or OBD-II general scan tool indicate DTC P0122 or P0123?***

YES : Inspect DTC P0122 or P0123 using “10. Diagnostics Chart with Trouble Code”. <Ref. to 2-7 [T10A0].>

NOTE:
In this case, it is not necessary to inspect DTC P1142.

NO : Replace throttle position sensor.

OBD (FB1)

P1143 <PS_RLOW>

B2M1128

CJ: DTC P1143 — PRESSURE SENSOR CIRCUIT RANGE/PERFORMANCE PROBLEM (LOW INPUT) —

DTC DETECTING CONDITION:

- Two consecutive driving cycles with fault

WIRING DIAGRAM:

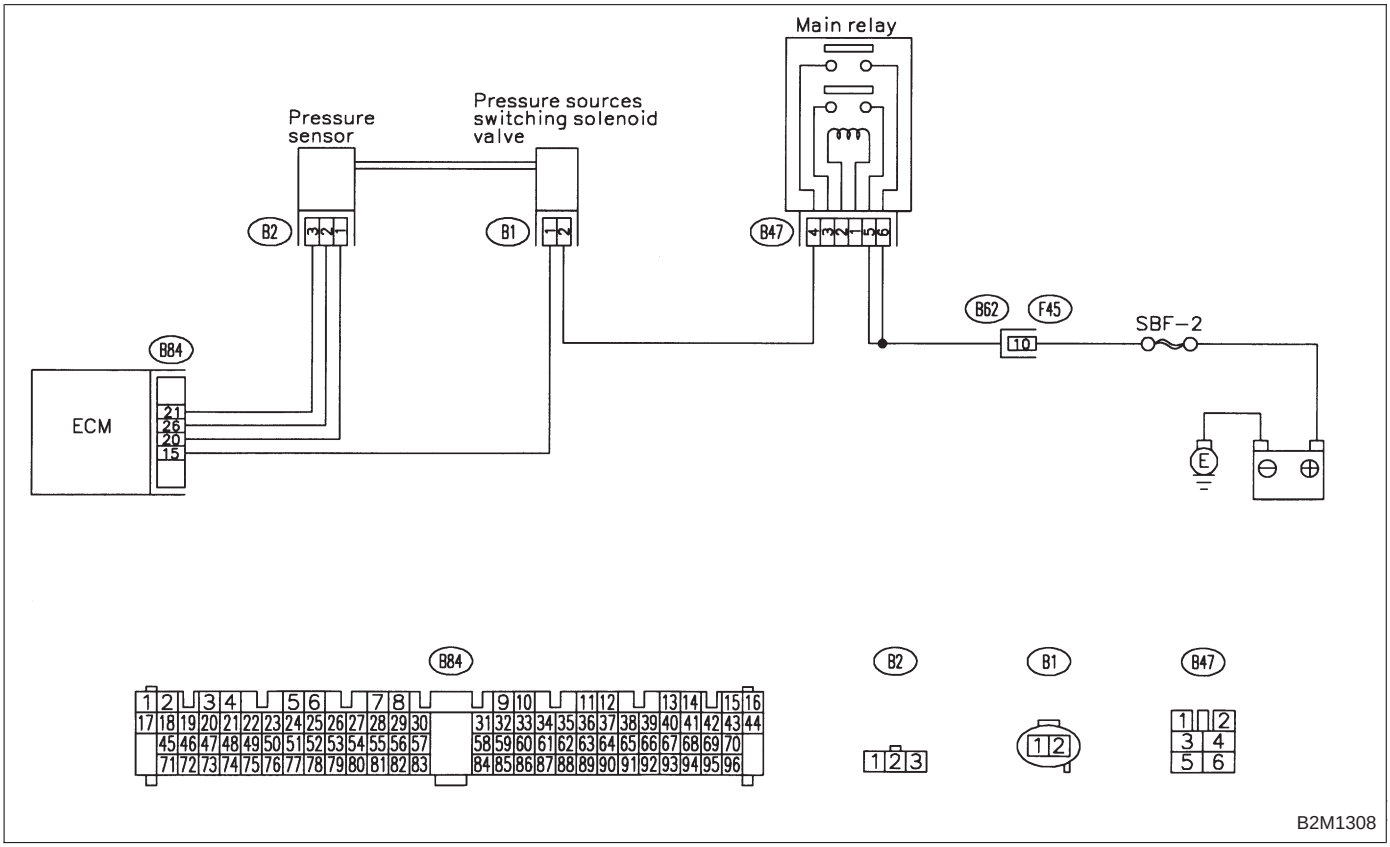

CAUTION:
After repair or replacement of faulty parts, conduct CLEAR MEMORY and INSPECTION MODES.
<Ref. to 2-7 [T3D0] and [T3E0].>

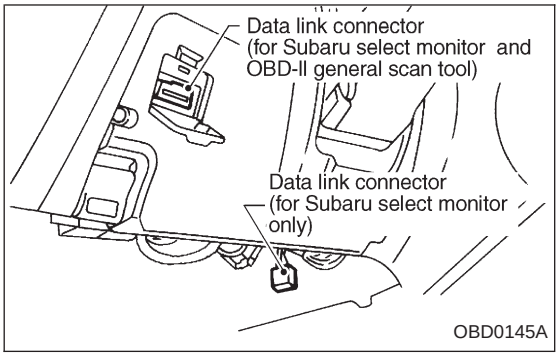

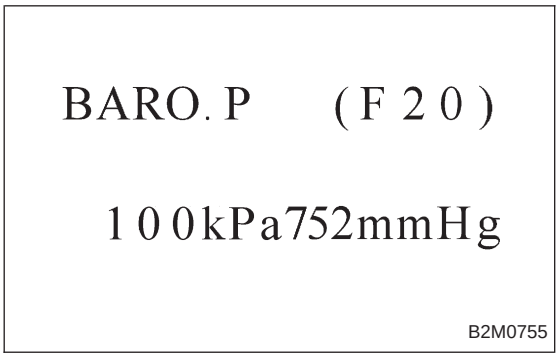

10CJ1	CHECK DATA FOR CONTROL.

1) Turn ignition switch to OFF.
2) Connect Subaru Select Monitor or the OBD-II general scan tool to data link connector.
3) Turn ignition switch ON and Subaru Select Monitor or the OBD-II general scan tool switch ON.
4) Start engine.
5) Read data on Subaru Select Monitor or the OBD-II general scan tool.

● Subaru Select Monitor
Designate mode using function key.

Function mode: F20

● F20: Display shows pressure signal value sent from the pressure sensor.

CHECK : ***Is the value less than 32 kPa in function mode F20?***

YES : Go to step **10CJ3**.

NO : Go to step **10CJ2**.

● OBD-II general scan tool
For detailed operation procedures, refer to the OBD-II General Scan Tool Instruction Manual.

BARO. P (F20)

100kPa752mmHg

B2M0755

10CJ2	CHECK PRESSURE SENSOR.

1) Measure actual atmospheric pressure.
2) Read data on Subaru Select Monitor or OBD-II general scan tool.
- Subaru Select Monitor

Designate mode using function key.

Function mode: F20

- F20: Display shows pressure signal value sent from the pressure sensor.

CHECK : ***Is the difference between absolute value of Subaru Selector Monitor indication and actual atmospheric pressure greater than 10 kPa (0.102 kg/cm^2, 1.45 psi)?***

YES : Replace pressure sensor.

NO : Even if MIL lights up, the circuit has returned to a normal condition at this time. Contact with SOA service.

NOTE:
Inspection by DTM is required, because probable cause is deterioration of multiple parts.

2200 cc AWD except Taiwan spec. vehicles

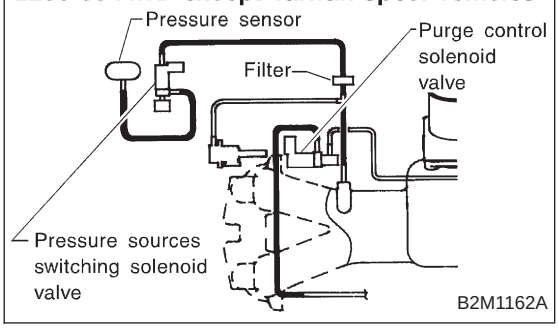

2200 cc FWD and Taiwan spec. vehicles

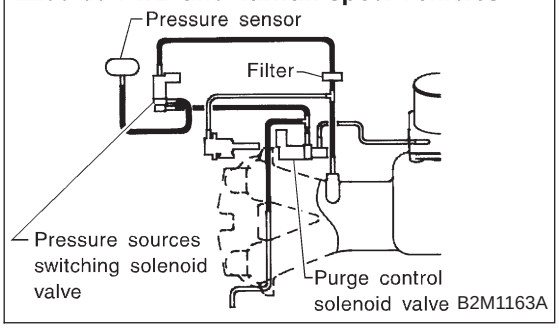

10CJ3	CHECK VACUUM HOSE.

CHECK : ***Is there a fault in vacuum hose?***

NOTE:
Check the following item.
Incorrect hose connections in line between the pressure sources switching solenoid valve and pressure sensor, intake manifold and/or CPC solenoid valve.

YES : Repair or replace hoses or filter.

NO : Go to step **10CJ4**.

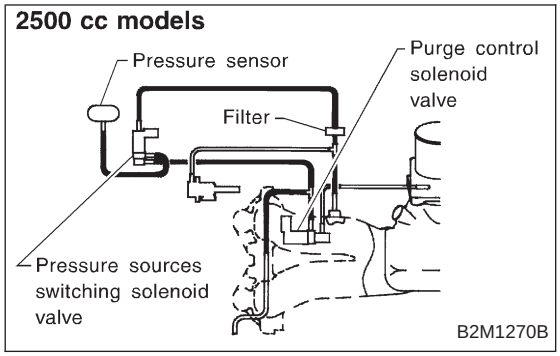

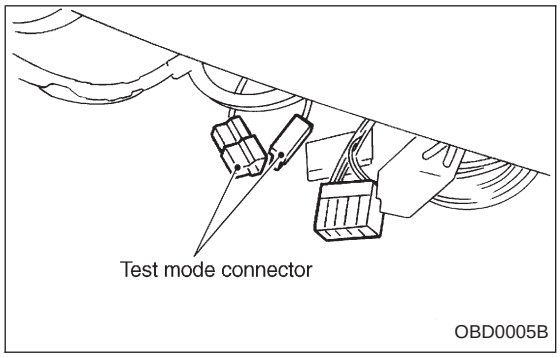

10CJ4	CHECK PRESSURE SOURCES SWITCHING SOLENOID VALVE.

1) Turn ignition switch to OFF.
2) Connect test mode connector.
3) Turn ignition switch to ON.

CHECK : ***Does pressure sources switching solenoid valve produce operating sound? (ON ↔ OFF each 1.5 sec.)***

NOTE:
Pressure sources switching solenoid valve operation check can also be executed using Subaru Select Monitor (Function mode: FD10). For the procedure, refer to “COMPULSORY VALVE OPERATION CHECK MODE”. <Ref. to 2-7 [T3F0].>

YES : Replace pressure sensor.

NO : Replace pressure sources switching solenoid valve.

OBD (FB1)

P1144 <PS_RHI>

B2M1129

CK: DTC P1144 — PRESSURE SENSOR CIRCUIT RANGE/PERFORMANCE PROBLEM (HIGH INPUT) —

DTC DETECTING CONDITION:

- Two consecutive driving cycles with fault

WIRING DIAGRAM:

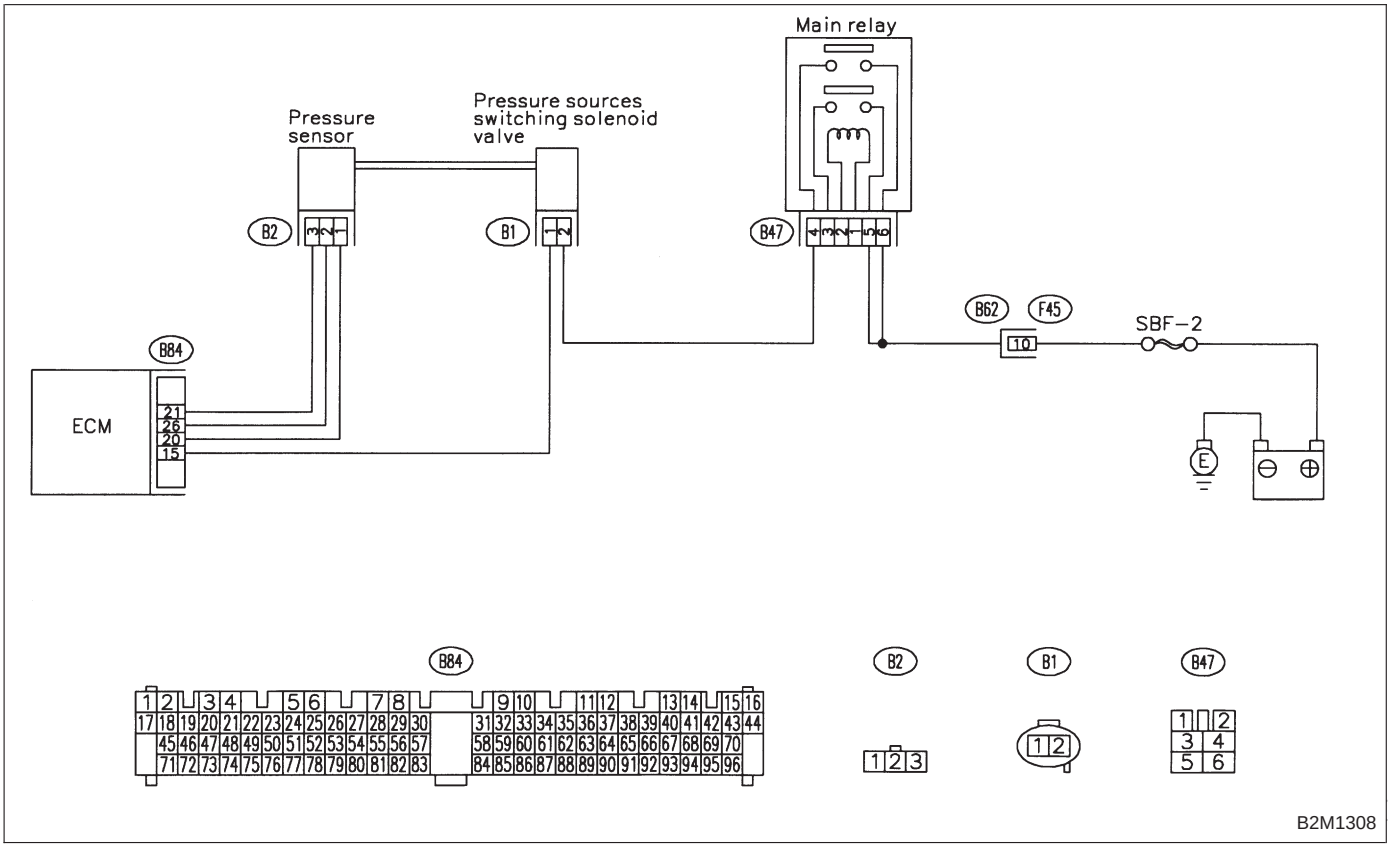

CAUTION:
After repair or replacement of faulty parts, conduct CLEAR MEMORY and INSPECTION MODES.
<Ref. to 2-7 [T3D0] and [T3E0].>

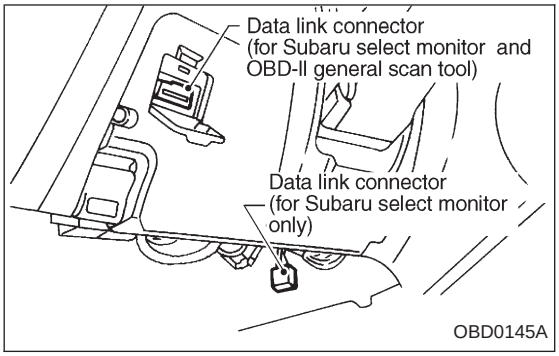

10CK1	CHECK DATA FOR CONTROL.

1) Turn ignition switch to OFF.
2) Connect Subaru Select Monitor or the OBD-II general scan tool to data link connector.
3) Turn ignition switch ON and Subaru Select Monitor or the OBD-II general scan tool switch ON.
4) Start engine.
5) Read data on Subaru Select Monitor or the OBD-II general scan tool.

● Subaru Select Monitor
Designate mode using function key.

Function mode: F20

● F20: Display shows pressure signal value sent from the pressure sensor.

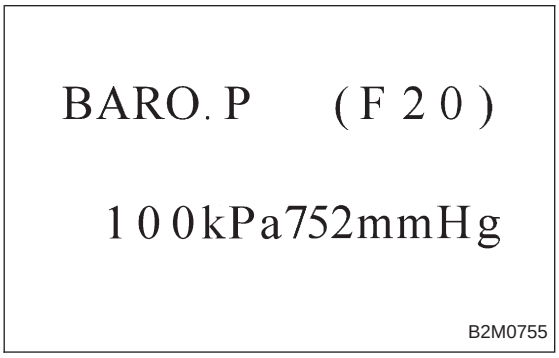

CHECK : ***Is the value more than 133 kPa in function mode F20?***

YES : Replace pressure sensor.

NO : Even if MIL lights up, the circuit has returned to a normal condition at this time. Contact with SOA service.

NOTE:
Inspection by DTM is required, because probable cause is deterioration of multiple parts.

● OBD-II general scan tool
For detailed operation procedures, refer to the OBD-II General Scan Tool Instruction Manual.

OBD (FB1)

P1400<PCVSOL_LO>

B2M1130

CL: DTC P1400 — FUEL TANK PRESSURE CONTROL SOLENOID VALVE CIRCUIT LOW INPUT —

DTC DETECTING CONDITION:

- Two consecutive driving cycles with fault

WIRING DIAGRAM:

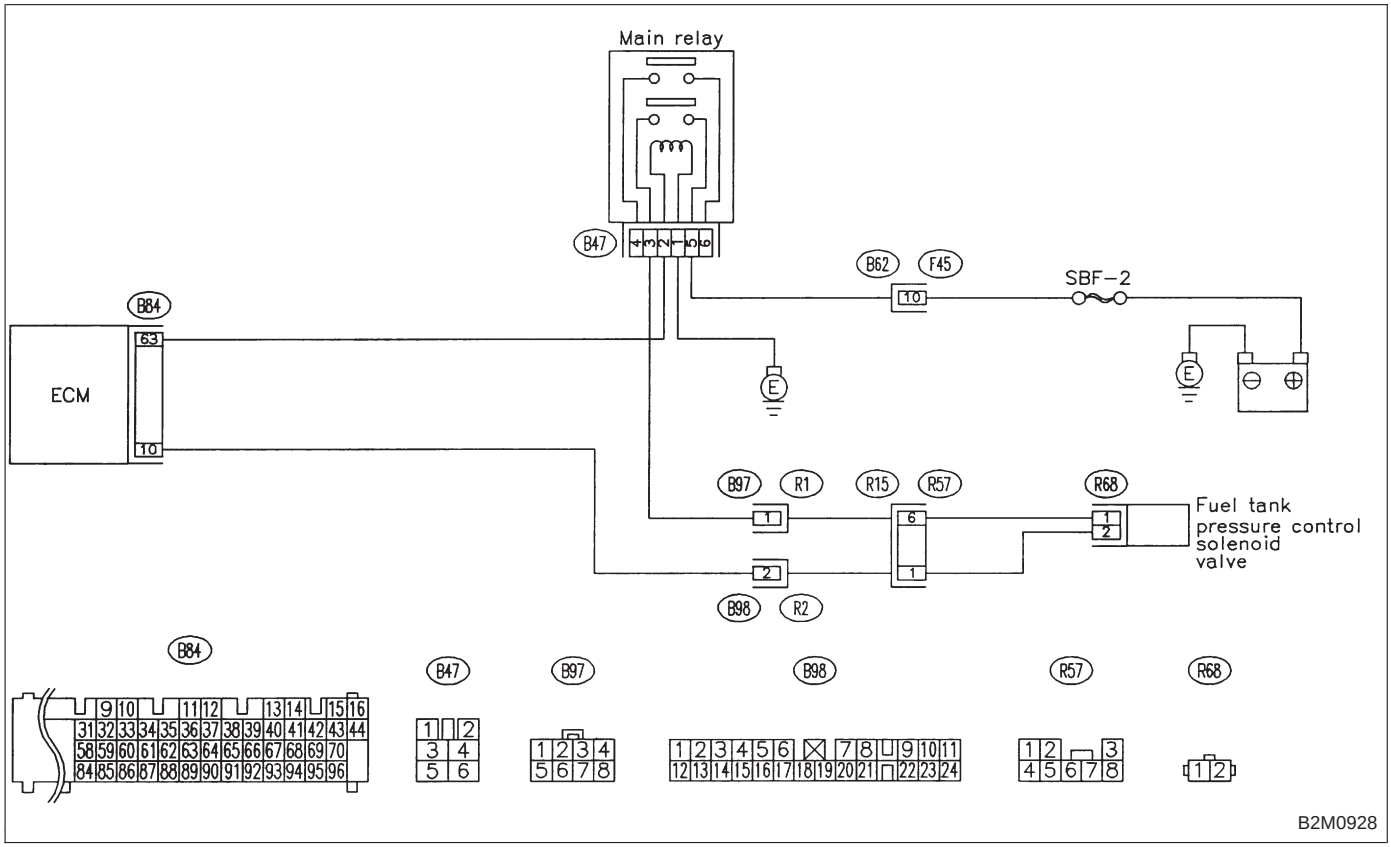

CAUTION:
After repair or replacement of faulty parts, conduct CLEAR MEMORY and INSPECTION MODES.
<Ref. to 2-7 [T3D0] and [T3E0].>

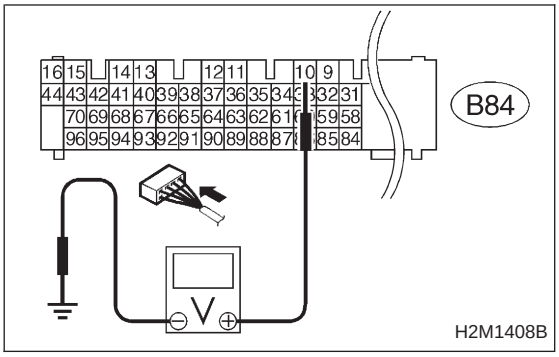

10CL1	CHECK OUTPUT SIGNAL FROM ECM.

1) Turn ignition switch to ON.
2) Measure voltage between ECM and chassis ground.

CHECK : ***Connector & terminal (B84) No. 10 (+) — Chassis ground (−): Is the voltage more than 10 V?***

YES : Go to next CHECK .

NO : Go to step **10CL2**.

CHECK : ***Is there poor contact in ECM connector?***

YES : Repair poor contact in ECM connector.

NO : Contact with SOA service.

NOTE:
Inspection by DTM is required, because probable cause is deterioration of multiple parts.

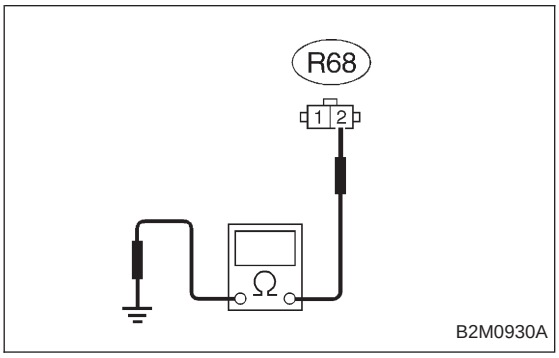

10CL2	CHECK HARNESS BETWEEN FUEL TANK PRESSURE CONTROL SOLENOID VALVE AND ECM CONNECTOR.

1) Turn ignition switch to OFF.
2) Disconnect connectors from fuel tank pressure control solenoid valve and ECM.
3) Measure resistance of harness between fuel tank pressure control solenoid valve connector and chassis ground.

CHECK : ***Connector & terminal (R68) No. 2 — Chassis ground: Is the resistance less than 10 Ω?***

YES : Repair ground short circuit in harness between ECM and fuel tank pressure control solenoid valve connector.

NO : Go to next step 4).

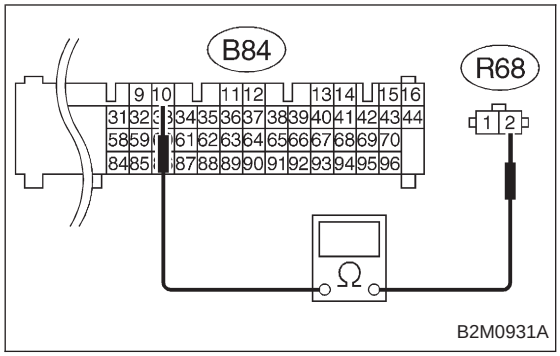

4) Measure resistance of harness between ECM and fuel tank pressure control solenoid valve connector.

CHECK : ***Connector & terminal (B84) No. 10 — (R68) No. 2: Is the voltage less than 1 Ω?***

YES : Go to step **10CL3**.

NO : Repair harness and connector.

NOTE:
In this case, repair the following:
- Open circuit in harness between ECM and fuel tank pressure control solenoid valve connector
- Poor contact in coupling connectors (B98 and R57)

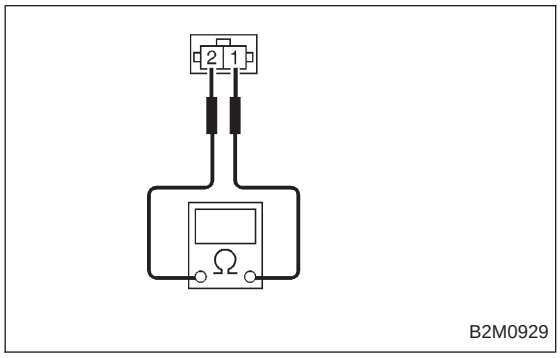

10CL3	CHECK FUEL TANK PRESSURE CONTROL SOLENOID VALVE.

Measure resistance between fuel tank pressure control solenoid valve terminals.

CHECK : ***Terminals No. 1 — No. 2: Is the resistance between 10 and 100 Ω?***

YES : Go to step **10CL4**.

NO : Replace fuel tank pressure control solenoid valve.

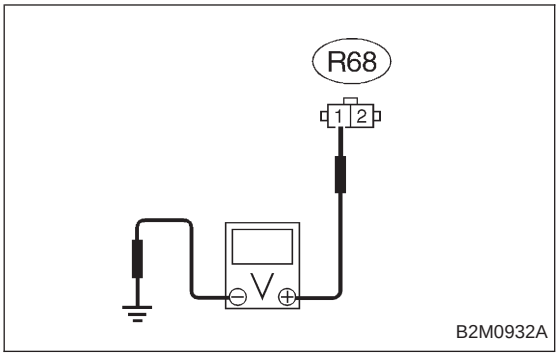

10CL4	CHECK POWER SUPPLY TO FUEL TANK PRESSURE CONTROL SOLENOID VALVE.

1) Turn ignition switch to ON.
2) Measure voltage between fuel tank pressure control solenoid valve and chassis ground.

CHECK : ***Connector & terminal (R68) No. 1 (+) — Chassis ground (−): Is the voltage more than 10 V?***

YES : Go to next CHECK .

NO : Repair harness and connector.

NOTE:
In this case, repair the following:
- Open circuit in harness between main relay and fuel tank pressure control solenoid valve connector
- Poor contact in coupling connectors (B97 and R57)
- Poor contact in main relay connector

CHECK : ***Is there poor contact in fuel tank pressure control solenoid valve connector?***

YES : Repair poor contact in fuel tank pressure control solenoid valve connector.

NO : Contact with SOA service.

NOTE:
Inspection by DTM is required, because probable cause is deterioration of multiple parts.

OBD (FB1)

P1420<PCVSOL_HI>

B2M1131

CM: DTC P1420 — FUEL TANK PRESSURE CONTROL SOLENOID VALVE CIRCUIT HIGH INPUT —

DTC DETECTING CONDITION:

- Two consecutive driving cycles with fault

WIRING DIAGRAM:

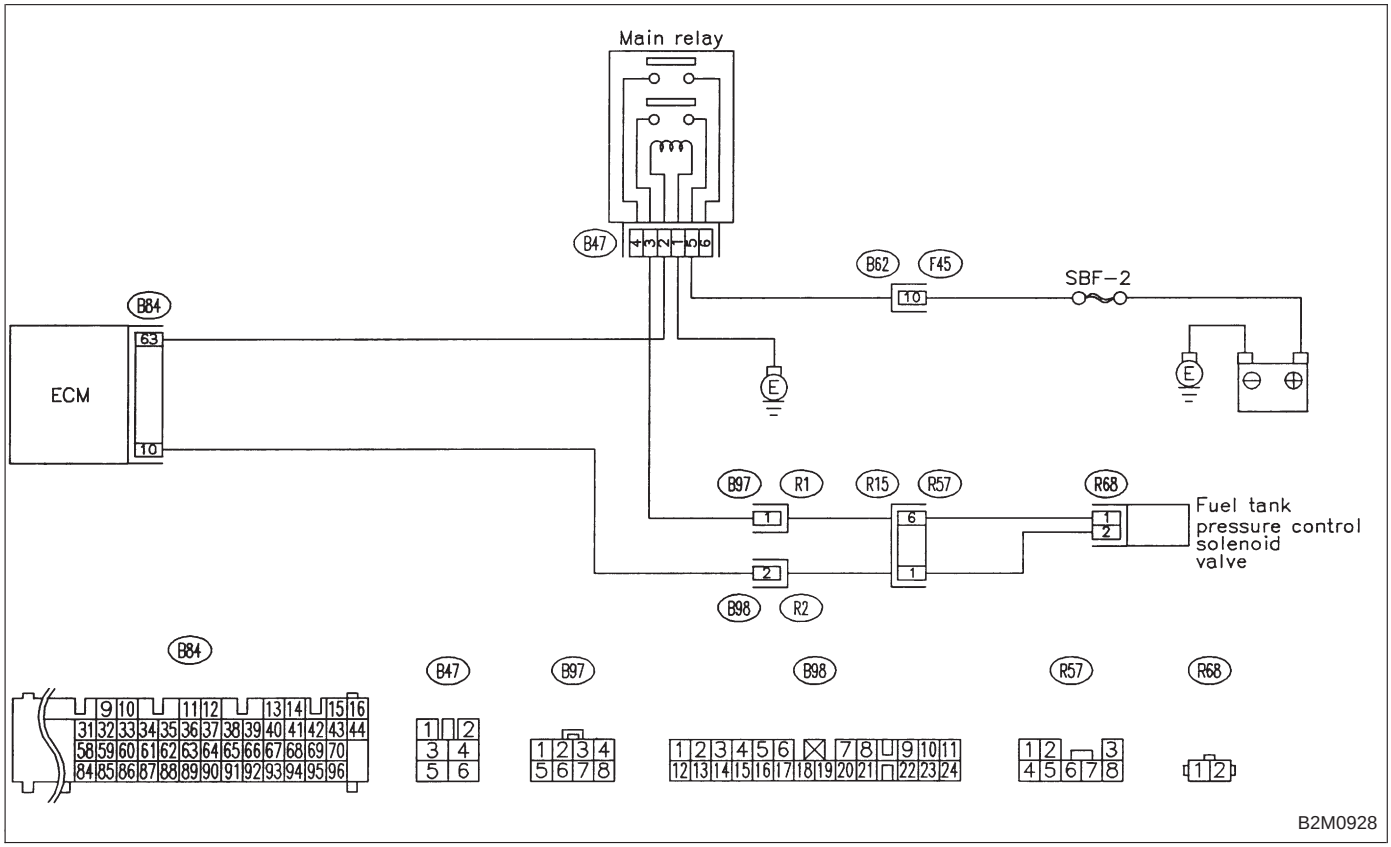

CAUTION:
After repair or replacement of faulty parts, conduct CLEAR MEMORY and INSPECTION MODES.
<Ref. to 2-7 [T3D0] and [T3E0].>

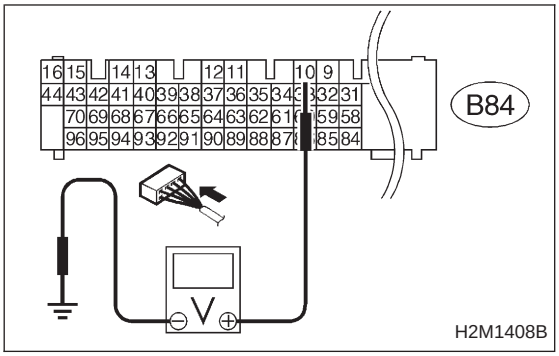

10CM1	CHECK OUTPUT SIGNAL FROM ECM.

1) Turn ignition switch to ON.
2) Measure voltage between ECM and chassis ground.

CHECK : ***Connector & terminal (B84) No. 10 (+) — Chassis ground (−): Is the voltage more than 10 V?***

YES : Go to step **10CM2**.

NO : Go to next CHECK .

CHECK : ***Is there poor contact in ECM connector?***

YES : Repair poor contact in ECM connector.

NO : Replace ECM.

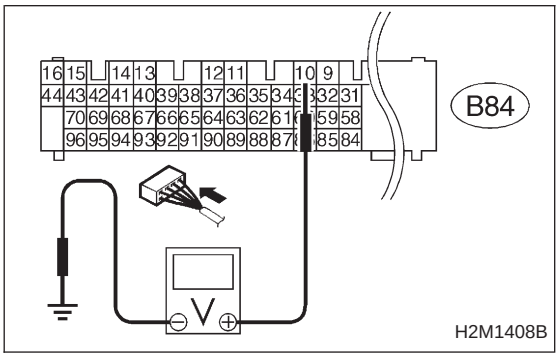

10CM2	CHECK HARNESS BETWEEN FUEL TANK PRESSURE CONTROL SOLENOID VALVE AND ECM CONNECTOR.

1) Turn ignition switch to OFF.
2) Disconnect connector from fuel tank pressure control solenoid valve.
3) Turn ignition switch to ON.
4) Measure voltage between ECM and chassis ground.

CHECK : ***Connector & terminal (B84) No. 10 (+) — Chassis ground (−): Is the voltage more than 10 V?***

YES : Repair battery short circuit in harness between ECM and fuel tank pressure control solenoid valve connector. After repair, replace ECM.

NO : Go to next step 5).

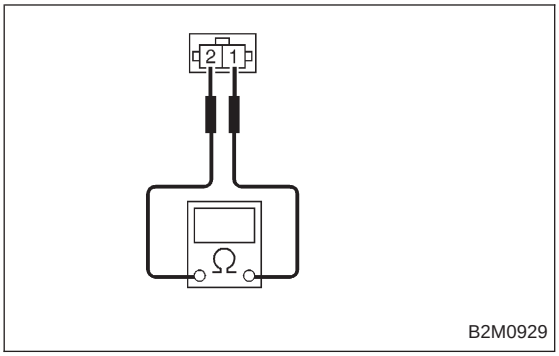

5) Turn ignition switch to OFF.
6) Measure resistance between fuel tank pressure control solenoid valve terminals.

CHECK ***: Terminals No. 1 — No. 2: Is the resistance less than 1 Ω?***

YES : Replace fuel tank pressure control solenoid valve and ECM.

NO : Go to next CHECK .

CHECK ***: Is there poor contact in ECM connector?***

YES : Repair poor contact in ECM connector.

NO : Replace ECM.

OBD (FB1)

P1421<EGRSOL_HI>

B2M1132

CN: DTC P1421 — EXHAUST GAS RECIRCULATION CIRCUIT HIGH INPUT —

DTC DETECTING CONDITION:

- Two consecutive driving cycles with fault

TROUBLE SYMPTOM:

- Poor driving performance on low engine speed

WIRING DIAGRAM:

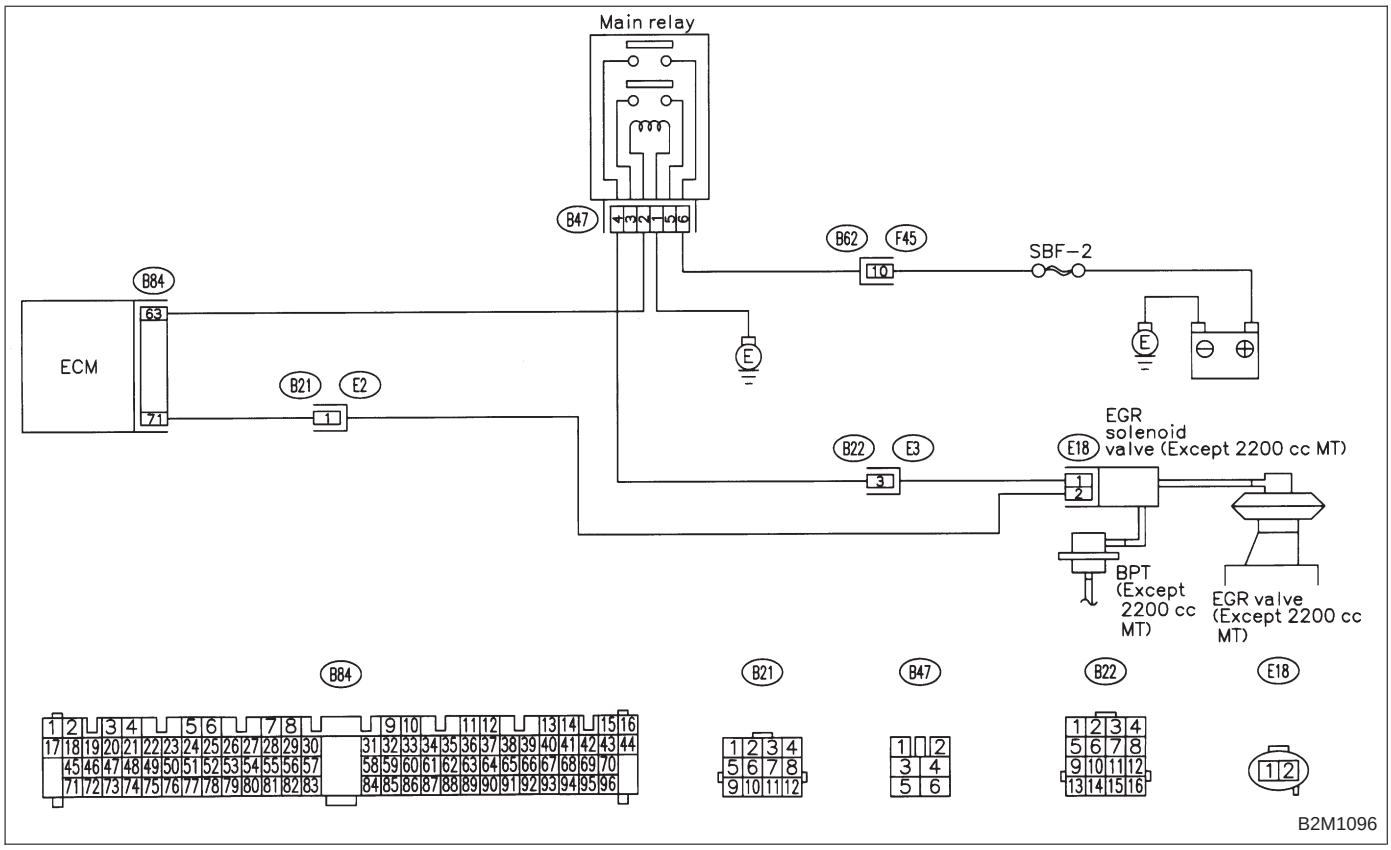

CAUTION:
After repair or replacement of faulty parts, conduct CLEAR MEMORY and INSPECTION MODES.
<Ref. to 2-7 [T3D0] and [T3E0].>

10CN1	CHECK ENGINE/TRANSMISSION TYPE.

CHECK : ***Is engine/transmission type 2200 cc/MT?***

YES : Check AT/MT identification circuit. <Ref. to 2-7 [T10DD0].>

NO : Go to step **10CN2**.

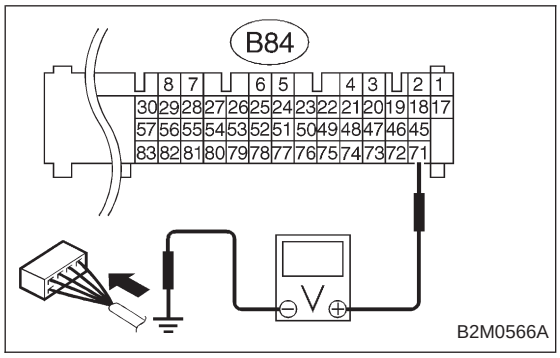

10CN2	CHECK OUTPUT SIGNAL FROM ECM.

1) Turn ignition switch to ON.
2) Measure voltage between ECM and chassis ground.

CHECK : ***Connector & terminal (B84) No. 71 (+) — Chassis ground (−): Is the voltage more than 10 V?***

YES : Go to step **10CN3**.

NO : Go to next CHECK .

CHECK : ***Is there poor contact in ECM connector?***

YES : Repair poor contact in ECM connector.

NO : Replace ECM.

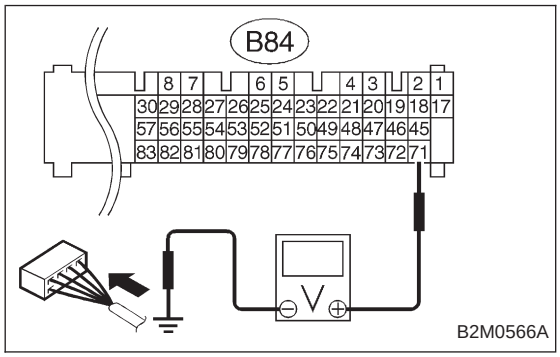

10CN3	CHECK HARNESS BETWEEN EGR SOLENOID VALVE AND ECM CONNECTOR.

1) Turn ignition switch to OFF.
2) Disconnect connector from EGR solenoid valve.
3) Turn ignition switch to ON.
4) Measure voltage between ECM and chassis ground.

CHECK : ***Connector & terminal (B84) No. 71 (+) — Chassis ground (−): Is the voltage more than 10 V?***

YES : Repair battery short circuit in harness between ECM and EGR solenoid valve connector. After repair, replace ECM.

NO : Go to next step 5).

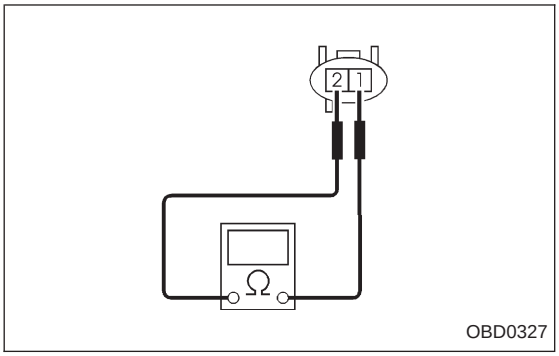

5) Turn ignition switch to OFF.
6) Measure resistance between EGR solenoid valve terminals.

CHECK ***: Terminals***
No. 1 — No. 2:
Is the resistance less than 1 Ω?

YES : Replace EGR solenoid valve and ECM.

NO : Go to next CHECK .

CHECK ***: Is there poor contact in ECM connector?***

YES : Repair poor contact in ECM connector.

NO : Replace ECM.

OBD (FB1)

P1422 <CPC_HI>

B2M1133

CO: DTC P1422 — EVAPORATIVE EMISSION CONTROL SYSTEM PURGE CONTROL VALVE CIRCUIT HIGH INPUT —

DTC DETECTING CONDITION:

- Two consecutive driving cycles with fault

TROUBLE SYMPTOM:

- Erroneous idling

WIRING DIAGRAM:

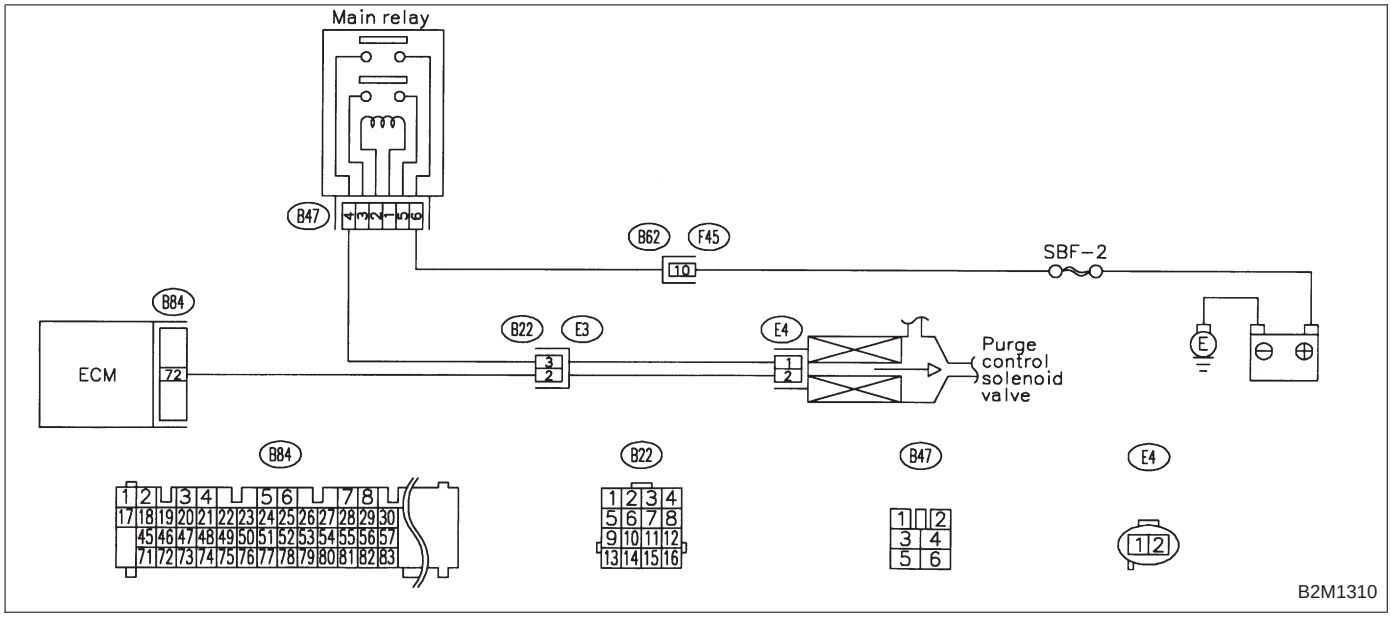

CAUTION:
After repair or replacement of faulty parts, conduct CLEAR MEMORY and INSPECTION MODES.
<Ref. to 2-7 [T3D0] and [T3E0].>

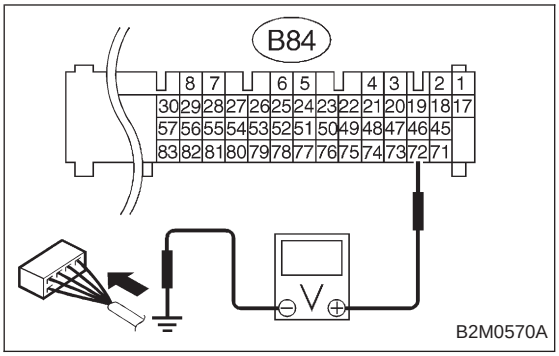

10CO1	CHECK OUTPUT SIGNAL FROM ECM.

1) Turn ignition switch to ON.
2) Measure voltage between ECM and chassis ground.

CHECK : ***Connector & terminal (B84) No. 72 (+) — Chassis ground (−): Is the voltage more than 10 V?***

YES : Go to step **10CO2**.

NO : Go to next CHECK .

CHECK : ***Is there poor contact in ECM connector?***

YES : Repair poor contact in ECM connector.

NO : Replace ECM.

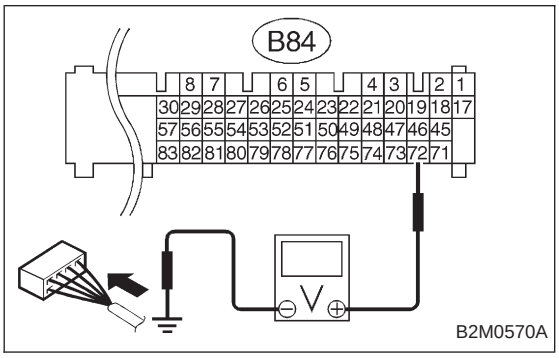

10CO2	CHECK HARNESS BETWEEN PURGE CONTROL SOLENOID VALVE AND ECM CONNECTOR.

1) Turn ignition switch to OFF.
2) Disconnect connector from purge control solenoid valve.
3) Turn ignition switch to ON.
4) Measure voltage between ECM and chassis ground.

CHECK : ***Connector & terminal (B84) No. 72 (+) — Chassis ground (−): Is the voltage more than 10 V?***

YES : Repair battery short circuit in harness between ECM and purge control solenoid valve connector. After repair, replace ECM.

NO : Go to next step 5).

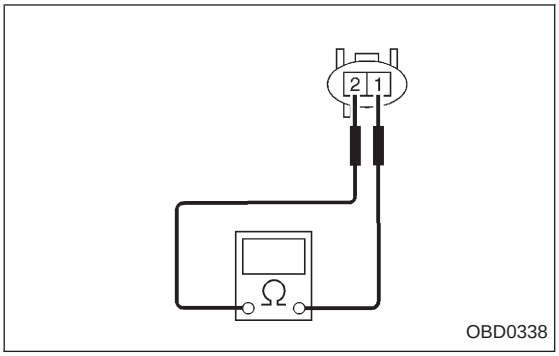

5) Turn ignition switch to OFF.
6) Measure resistance between purge control solenoid valve terminals.

CHECK : ***Terminals No. 1 — No. 2: Is the resistance less than 1 Ω?***

YES : Replace purge control solenoid valve and ECM.

NO : Go to next CHECK .

CHECK : ***Is there poor contact in ECM connector?***

YES : Repair poor contact in ECM connector.

NO : Replace ECM.

OBD (FB1)

P1423<VCMSOL_HI>

B2M1134

CP: DTC P1423 — EVAPORATIVE EMISSION CONTROL SYSTEM VENT CONTROL HIGH INPUT —

DTC DETECTING CONDITION:

- Two consecutive driving cycles with fault

WIRING DIAGRAM:

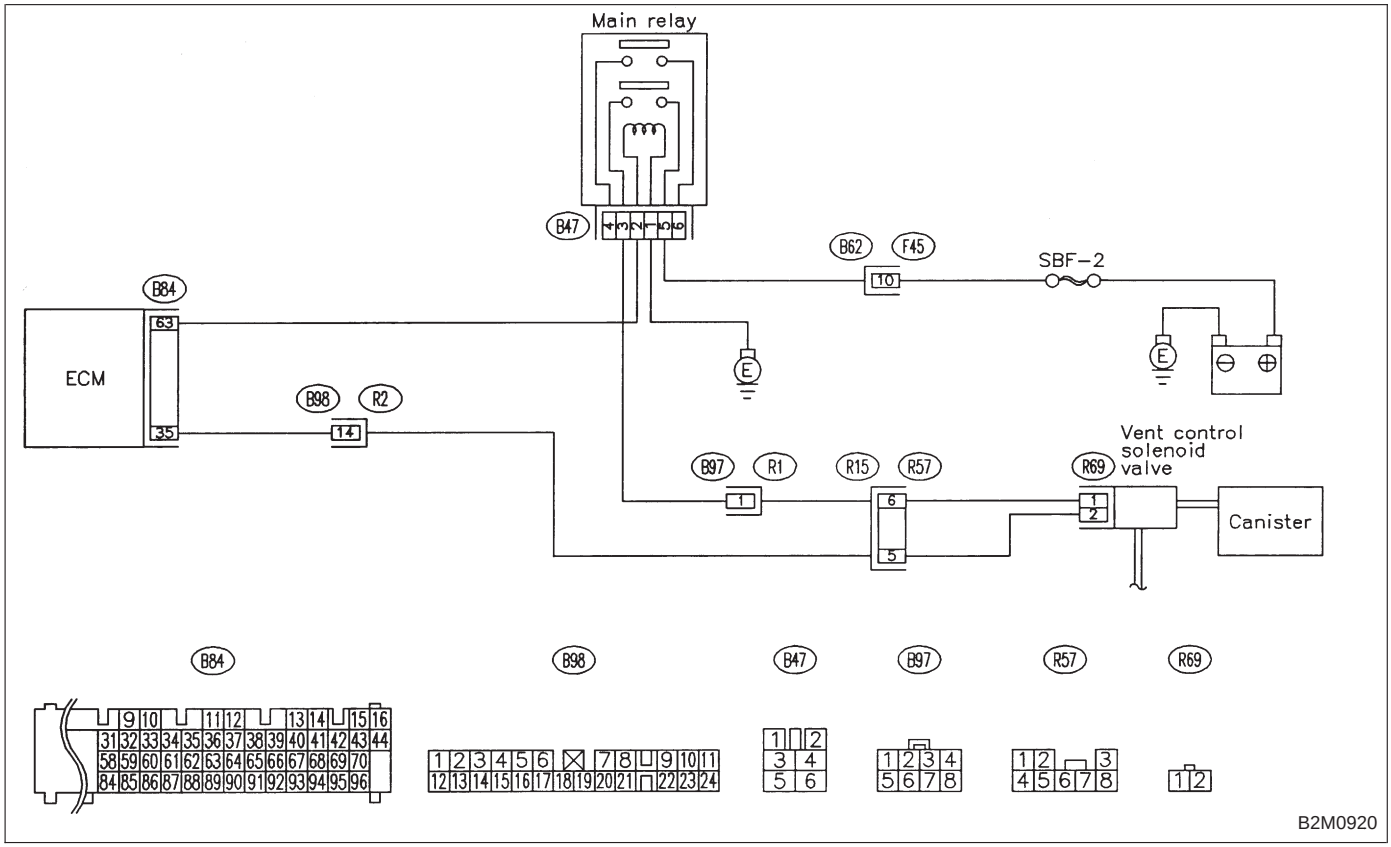

CAUTION:
After repair or replacement of faulty parts, conduct CLEAR MEMORY and INSPECTION MODES.
<Ref. to 2-7 [T3D0] and [T3E0].>

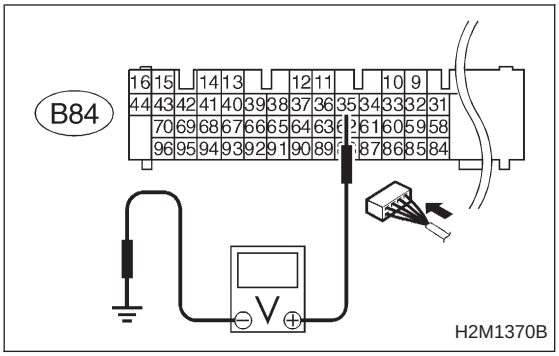

10CP1	CHECK OUTPUT SIGNAL FROM ECM.

1) Turn ignition switch to ON.
2) Measure voltage between ECM and chassis ground.

CHECK : ***Connector & terminal (B84) No. 35 (+) — Chassis ground (−): Is the voltage more than 10 V?***

YES : Go to step **10CP2**.

NO : Go to next CHECK .

CHECK : ***Is there poor contact in ECM connector?***

YES : Repair poor contact in ECM connector.

NO : Replace ECM.

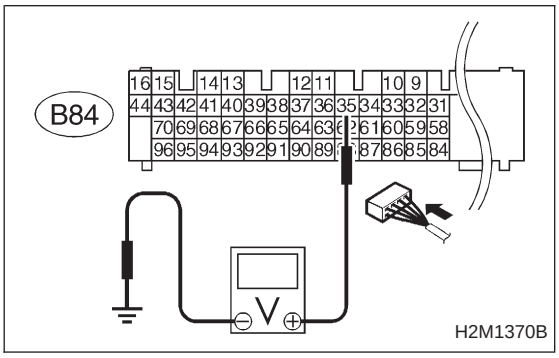

10CP2	CHECK HARNESS BETWEEN VENT CONTROL SOLENOID VALVE AND ECM CONNECTOR.

1) Turn ignition switch to OFF.
2) Disconnect connector from vent control solenoid valve.
3) Turn ignition switch to ON.
4) Measure voltage between ECM and chassis ground.

CHECK : ***Connector & terminal (B84) No. 35 (+) — Chassis ground (−): Is the voltage more than 10 V?***

YES : Repair battery short circuit in harness between ECM and vent control solenoid valve connector. After repair, replace ECM.

NO : Go to next step 5).

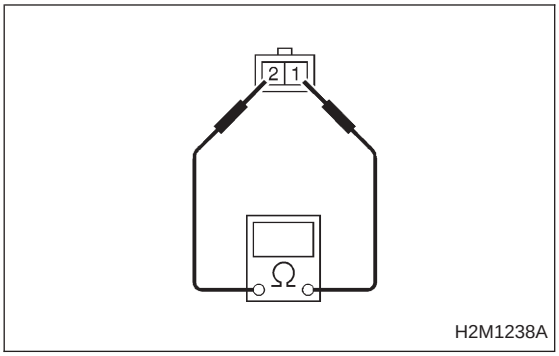

5) Turn ignition switch to OFF.
6) Measure resistance between vent control solenoid valve terminals.

CHECK ***: Terminals No. 1 — No. 2: Is the resistance less than 1 Ω?***

YES : Replace vent control solenoid valve and ECM.

NO : Go to next CHECK .

CHECK ***: Is there poor contact in ECM connector?***

YES : Repair poor contact in ECM connector.

NO : Replace ECM.

OBD (FB1)

P1440 <PCV_FLOW>

B2M1135

CQ: DTC P1440 — FUEL TANK PRESSURE CONTROL SYSTEM FUNCTION PROBLEM (LOW INPUT) —

DTC DETECTING CONDITION:

- Two consecutive driving cycles with fault

WIRING DIAGRAM:

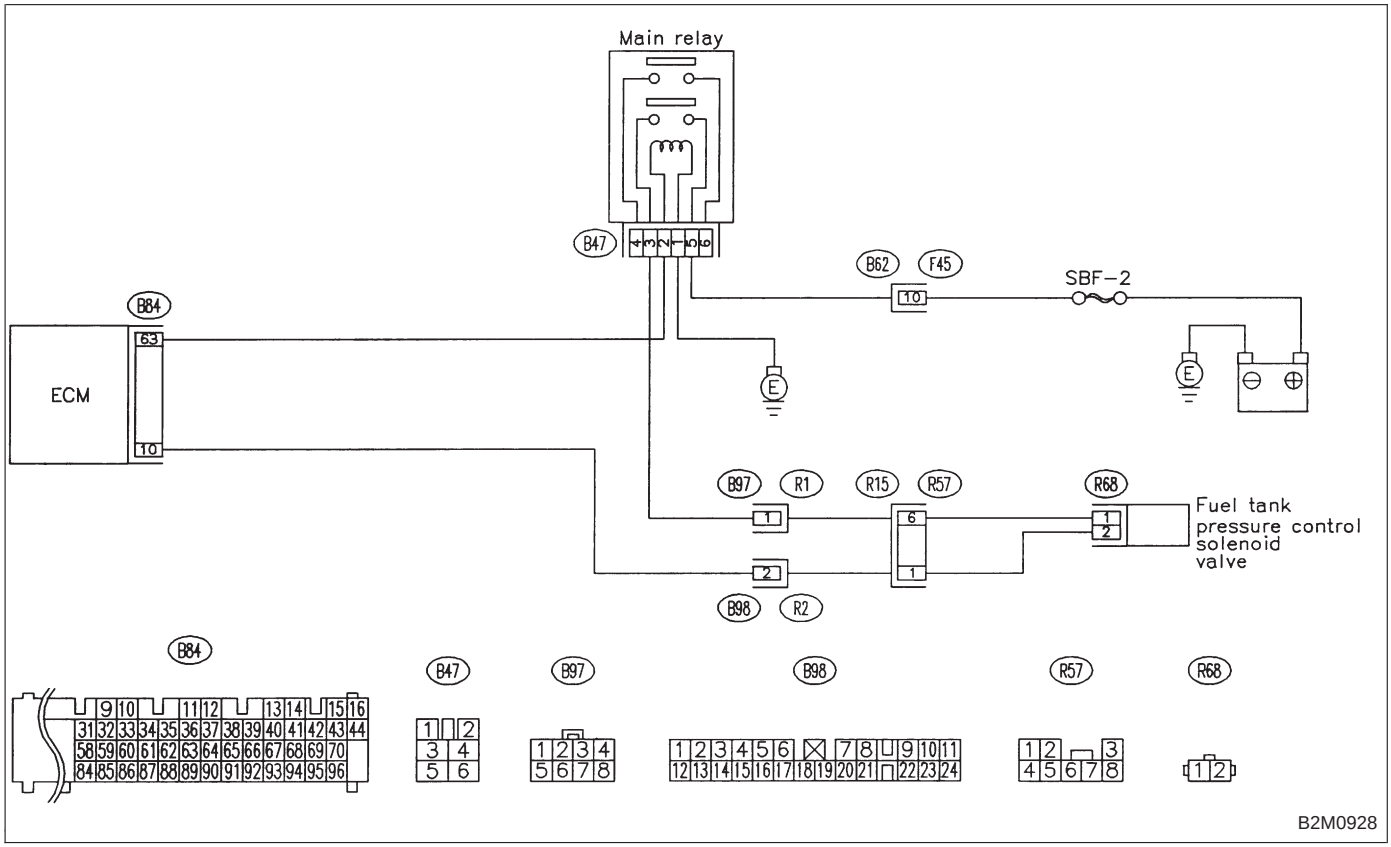

CAUTION:
After repair or replacement of faulty parts, conduct CLEAR MEMORY and INSPECTION MODES.
<Ref. to 2-7 [T3D0] and [T3E0].>

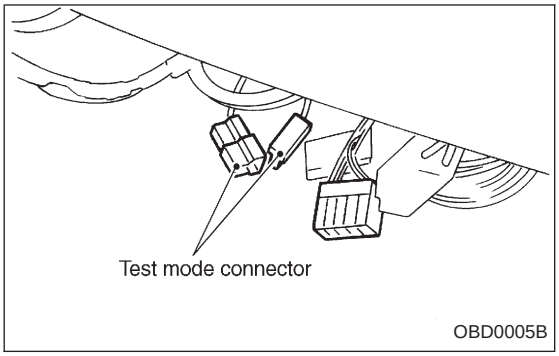

10CQ1	CHECK FUEL TANK PRESSURE CONTROL SOLENOID VALVE.

1) Turn ignition switch to OFF.
2) Connect test mode connector.
3) Turn ignition switch to ON.

CHECK : ***Does fuel tank pressure control solenoid valve produce operating sound?***

NOTE:
Fuel tank pressure control solenoid valve operation check can also be executed using Subaru Select Monitor (Function mode: FD07). For the procedure, refer to “COMPULSORY VALVE OPERATION CHECK MODE”. <Ref. to 2-7 [T3F0].>

YES : Go to step **10CQ2**.

NO : Replace fuel tank pressure control solenoid valve.

10CQ2	CHECK FUEL FILLER CAP AND FUEL FILLER PIPE.

1) Turn ignition switch to OFF.
2) Open the fuel flap.

CHECK : ***Is the fuel filler cap tightened securely?***

YES : Tighten fuel filler cap securely.

NO : Go to next CHECK .

CHECK : ***Is there any damage to the seal between fuel filler cap and fuel filler pipe?***

YES : Repair or replace fuel filler cap and fuel filler pipe.

NO : Go to step **10CQ3**.

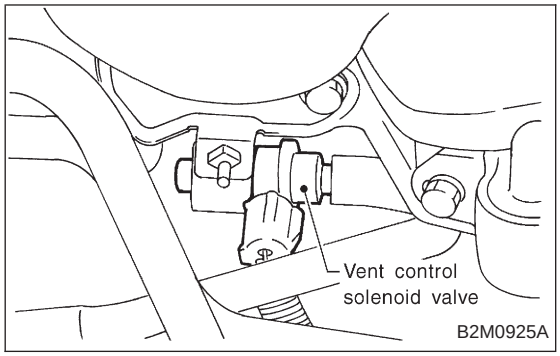

10CQ3	CHECK VENT CONTROL SOLENOID VALVE.

Turn ignition switch to ON.

CHECK : ***Does vent control solenoid valve produce operating sound?***

NOTE:
Vent control solenoid valve operation check can also be executed using Subaru Select Monitor (Function mode: FD08). For the procedure, refer to “COMPULSORY VALVE OPERATION CHECK MODE”. <Ref. to 2-7 [T3F0].>

YES : Go to step **10CQ4**.

NO : Replace vent control solenoid valve.

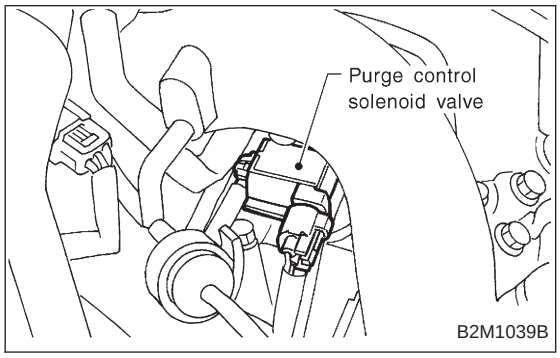

10CQ4	CHECK PURGE CONTROL SOLENOID VALVE.

CHECK : ***Does purge control solenoid valve produce operating sound?***

NOTE:
Purge control solenoid valve operation check can also be executed using Subaru Select Monitor (Function mode: FD02). For the procedure, refer to “COMPULSORY VALVE OPERATION CHECK MODE”. <Ref. to 2-7 [T3F0].>

YES : Go to step **10CQ5**.

NO : Replace purge control solenoid valve.

10CQ5	CHECK EVAPORATIVE EMISSION CONTROL SYSTEM LINE.

Turn ignition switch to OFF.

CHECK ***: Does fuel leak in fuel line?***

YES : Repair or replace fuel line.

NO : Go to next CHECK .

CHECK ***: Is there any damage at canister?***

YES : Repair or replace canister.

NO : Go to next CHECK .

CHECK ***: Is there any damage at fuel tank?***

YES : Repair or replace fuel tank.

NO : Go to next CHECK .

CHECK ***: Are there holes, cracks or disconnections of hoses or pipes in evaporative emission control system?***

YES : Repair or replace hoses or pipes.

NO : Contact with SOA service.

NOTE:
Inspection by DTM is required, because probable cause is deterioration of multiple parts.

OBD (FB1)

P1441 <PCV_FHI>

B2M1136

CR: DTC P1441 — FUEL TANK PRESSURE CONTROL SYSTEM FUNCTION PROBLEM (HIGH INPUT) —

DTC DETECTING CONDITION:

- Two consecutive driving cycles with fault

WIRING DIAGRAM:

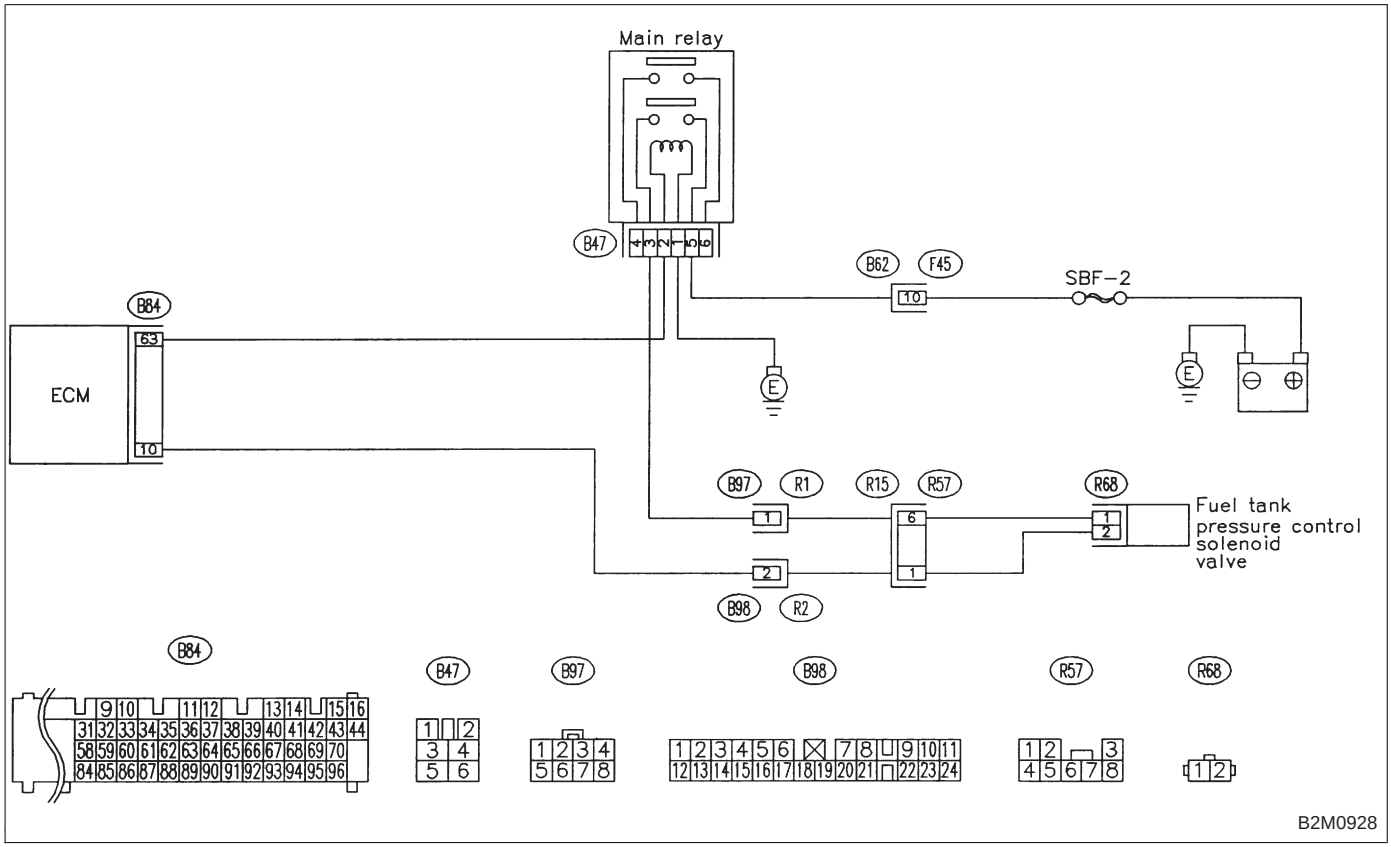

CAUTION:
After repair or replacement of faulty parts, conduct CLEAR MEMORY and INSPECTION MODES.
<Ref. to 2-7 [T3D0] and [T3E0].>

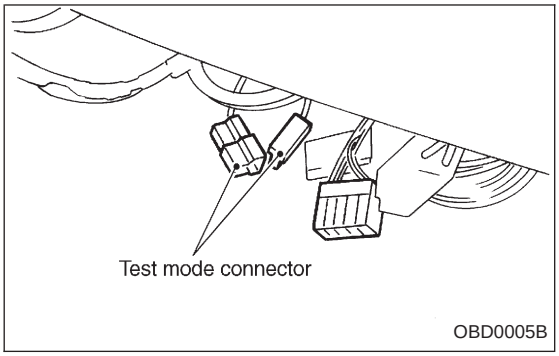

10CR1	CHECK FUEL TANK PRESSURE CONTROL SOLENOID VALVE.

1) Turn ignition switch to OFF.
2) Connect test mode connector.
3) Turn ignition switch to ON.

CHECK : ***Does fuel tank pressure control solenoid valve produce operating sound?***

NOTE:
Fuel tank pressure control solenoid valve operation check can also be executed using Subaru Select Monitor (Function mode: FD07). For the procedure, refer to “COMPULSORY VALVE OPERATION CHECK MODE”. <Ref. to 2-7 [T3F0].>

YES : Go to step **10CR2**.

NO : Replace fuel tank pressure control solenoid valve.

10CR2	CHECK FUEL FILLER CAP AND FUEL FILLER PIPE.

1) Turn ignition switch to OFF.
2) Open the fuel flap.

CHECK : ***Is there any damage at fuel filler cap and fuel filler pipe?***

YES : Repair or replace fuel filler cap and fuel filler pipe.

NO : Go to step **10CR3**.

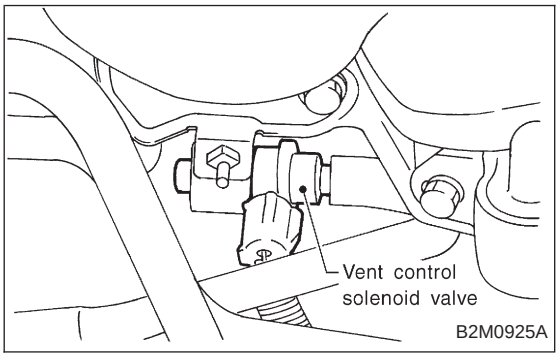

10CR3	CHECK VENT CONTROL SOLENOID VALVE.

Turn ignition switch to ON.

CHECK : ***Does vent control solenoid valve produce operating sound?***

NOTE:
Vent control solenoid valve operation check can also be executed using Subaru Select Monitor (Function mode: FD08). For the procedure, refer to “COMPULSORY VALVE OPERATION CHECK MODE”. <Ref. to 2-7 [T3F0].>

YES : Go to step **10CR4**.

NO : Replace vent control solenoid valve.

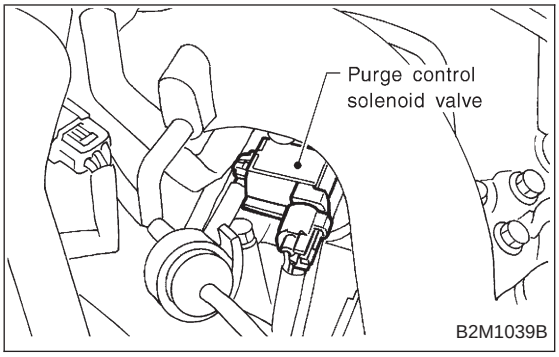

10CR4	CHECK PURGE CONTROL SOLENOID VALVE.

CHECK : ***Does purge control solenoid valve produce operating sound?***

NOTE:
Purge control solenoid valve operation check can also be executed using Subaru Select Monitor (Function mode: FD02). For the procedure, refer to “COMPULSORY VALVE OPERATION CHECK MODE”. <Ref. to 2-7 [T3F0].>

YES : Go to step **10CR5**.

NO : Replace purge control solenoid valve.

10CR5	CHECK EVAPORATIVE EMISSION CONTROL SYSTEM LINE.

Turn ignition switch to OFF.

CHECK : ***Is there any damage at canister?***

YES : Repair or replace canister.

NO : Go to next CHECK .

CHECK : ***Is there any damage at fuel tank?***

YES : Repair or replace fuel tank.

NO : Go to next CHECK .

CHECK : ***Is there clogging of hoses or pipes in evaporative emission control system?***

YES : Repair or replace hoses or pipes.

NO : Contact with SOA service.

NOTE:
Inspection by DTM is required, because probable cause is deterioration of multiple parts.

OBD (FB1)

P1442 <FLVL_R2>

B2M1137

CS: DTC P1442 — FUEL LEVEL SENSOR CIRCUIT RANGE/ PERFORMANCE PROBLEM 2 —

DTC DETECTING CONDITION:

- Two consecutive driving cycles with fault

WIRING DIAGRAM:

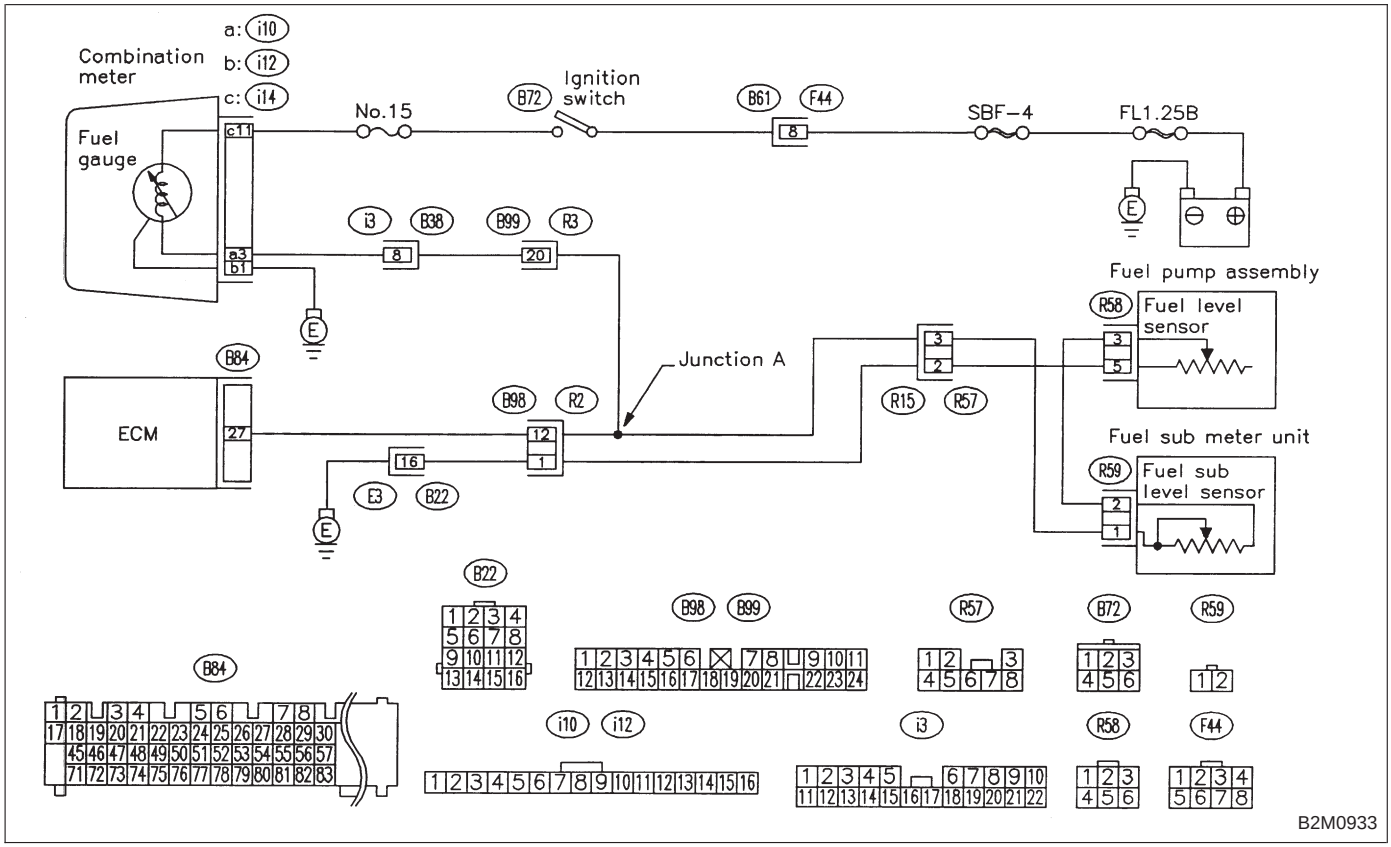

CAUTION:
After repair or replacement of faulty parts, conduct CLEAR MEMORY and INSPECTION MODES.
<Ref. to 2-7 [T3D0] and [T3E0].>

10CS1	CHECK DTC P0461, P0462 OR P0463 ON DISPLAY.

CHECK : ***Does the Subaru select monitor or OBD-II general scan tool indicate DTC P0461, P0462 or P0463?***

YES : Inspect DTC P0461, P0462 or P0463 using “10. Diagnostics Chart with Trouble Code”. <Ref. to 2-7 [T10A0].>

NOTE:
In this case, it is not necessary to inspect this trouble.

NO : Replace fuel sending unit and fuel sub meter unit.

OBD	(FB1)
P1500	<FAN_1>

OBD0527

CT: DTC P1500 — RADIATOR FAN RELAY 1 CIRCUIT LOW INPUT —

DTC DETECTING CONDITION:

- Two consecutive driving cycles with fault

TROUBLE SYMPTOM:

- Radiator fan does not operate properly.
- Overheating

WIRING DIAGRAM:

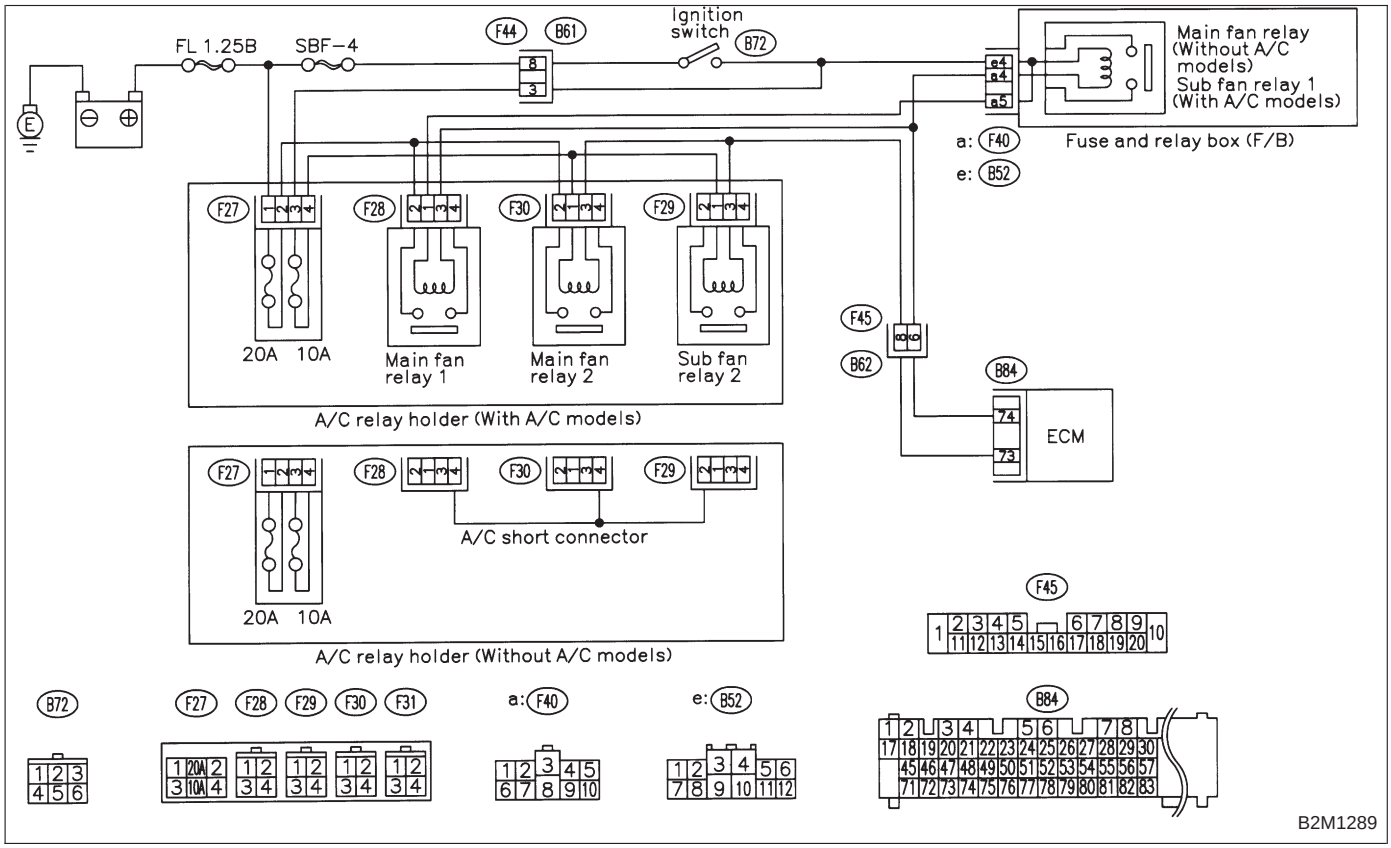

CAUTION:
After repair or replacement of faulty parts, conduct CLEAR MEMORY and INSPECTION MODE.
<Ref. to 2-7 [T3D0] and [T3E0].>

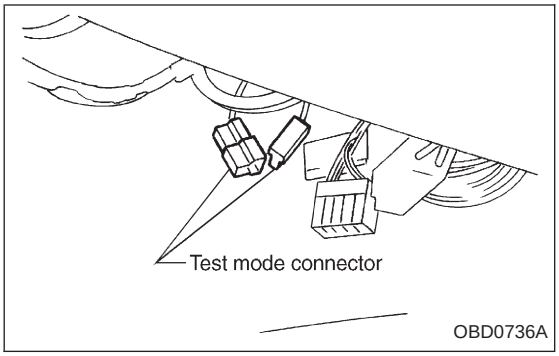

10CT1	CHECK OUTPUT SIGNAL FROM ECM.

1) Turn ignition switch to OFF.
2) Connect test mode connector at the lower portion of instrument panel (on the driver's side), to the side of the center console box.
3) Turn ignition switch to ON.

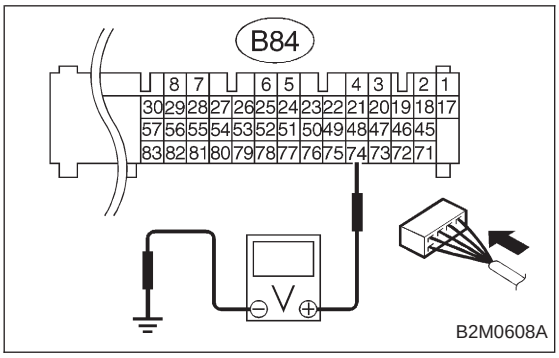

4) Measure voltage between ECM and chassis ground.

CHECK : ***Connector & terminal (B84) No. 74 (+) — Chassis ground: Does voltage change between 0 and 10 volts?***

NOTE:
Radiator fan relay operation check can be executed using Subaru Select Monitor (Function mode: FD03). For procedure, refer to "COMPULSORY VALVE OPERATION CHECK MODE". <Ref. to 2-7 [T3F0].>

YES : Repair poor contact in ECM connector.

NO : Go to step **10CT2**.

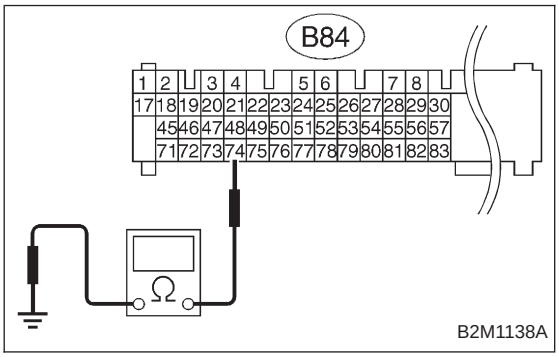

10CT2	CHECK GROUND SHORT CIRCUIT IN RADIATOR FAN RELAY 1 CONTROL CIRCUIT.

1) Turn ignition switch to OFF.
2) Disconnect connectors from ECM.
3) Measure resistance of harness between ECM connector and chassis ground.

CHECK : ***Connector & terminal (B84) No. 74 — Chassis ground: Is the resistance less than 10 Ω?***

YES : Repair ground short circuit in radiator fan relay 1 control circuit.

NO : Go to step **10CT3**.

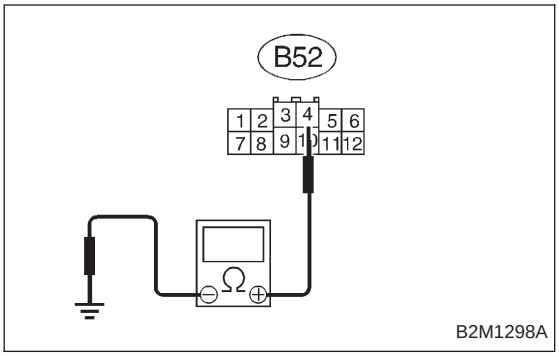

10CT3	CHECK POWER SUPPLY FOR RELAY.

1) Disconnect connector (B52) from fuse and relay box (F/B).
2) Turn ignition switch to ON.
3) Measure voltage between fuse and relay box (F/B) connector and chassis ground.

CHECK : ***Connector & terminal (B52) No. 4 (+) — Chassis ground (−): Is the voltage more than 10 V?***

YES : Go to step **10CT4**.

NO : Repair open circuit in harness between ignition switch and fuse and relay box (F/B) connector.

10CT4	CHECK VEHICLE MODEL.

CHECK : ***Is the vehicle equipped with A/C?***

YES : Go to step **10CT5**.

NO : Go to step **10CT6**.

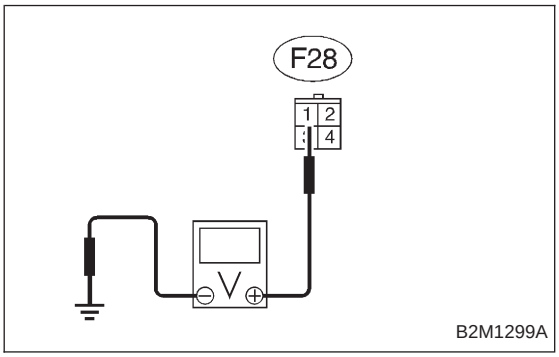

10CT5	CHECK POWER SUPPLY FOR MAIN FAN RELAY 1.

1) Turn ignition switch to OFF.
2) Connect connector (B52) to fuse and relay box (F/B).
3) Remove main fan relay 1.
4) Turn ignition switch to ON.
5) Measure voltage between main fan relay 1 connector and chassis ground.

CHECK : ***Connector & terminal (F28) No. 1 (+) — Chassis ground (−): Is the voltage more than 10 V?***

YES : Go to step **10CT6**.

NO : Repair open circuit in harness between fuse and relay box (F/B) and main fan relay 1 connector.

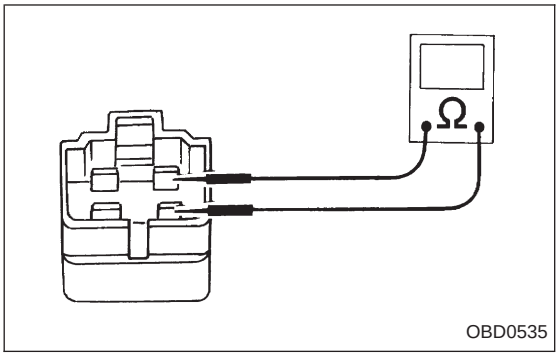

10CT6	CHECK MAIN FAN RELAY 1, SUB FAN RELAY 1 AND MAIN FAN RELAY.

1) Turn ignition switch to OFF.
2) Measure resistance between main fan relay 1 terminals. (With A/C models only)

CHECK : ***Terminal No. 1 — No. 3: Is the resistance between 87 and 107 Ω?***

YES : Go to next step 3).

NO : Replace main fan relay 1.

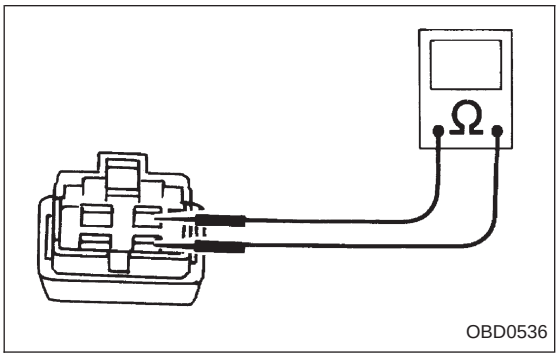

3) Remove sub fan relay 1. (With A/C models only)
Remove main fan relay. (Without A/C models only)
4) Measure resistance between sub fan relay 1 or main fan relay terminals.

CHECK : ***Terminal No. 1 — No. 3: Is the resistance between 83 and 117 Ω?***

YES : Go to step **10CT7**.

NO : Replace sub fan relay 1.

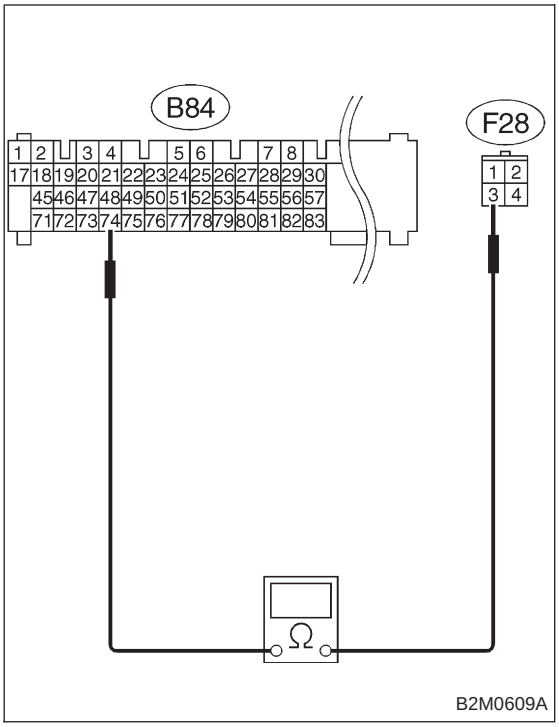

10CT7	CHECK OPEN CIRCUIT IN RADIATOR FAN RELAY 1 CONTROL CIRCUIT.

1) Disconnect connector (F40) from fuse and relay box (F/B).
2) Measure resistance of harness between ECM and main fan relay 1 connector.

NOTE:
With A/C models only.

CHECK : ***Connector & terminal (B84) No. 74 — (F28) No. 3: Is the resistance less than 1 Ω?***

YES : Go to next CHECK .

NO : Repair harness and connector.

NOTE:
In this case, repair the following:
- Open circuit in harness between ECM and main fan relay 1 connector
- Poor contact in coupling connector (F45)

CHECK : ***Is there poor contact in ECM or main fan relay 1 connector?***

YES : Repair poor contact in ECM or main fan relay 1 connector.

NO : Go to next step 3).

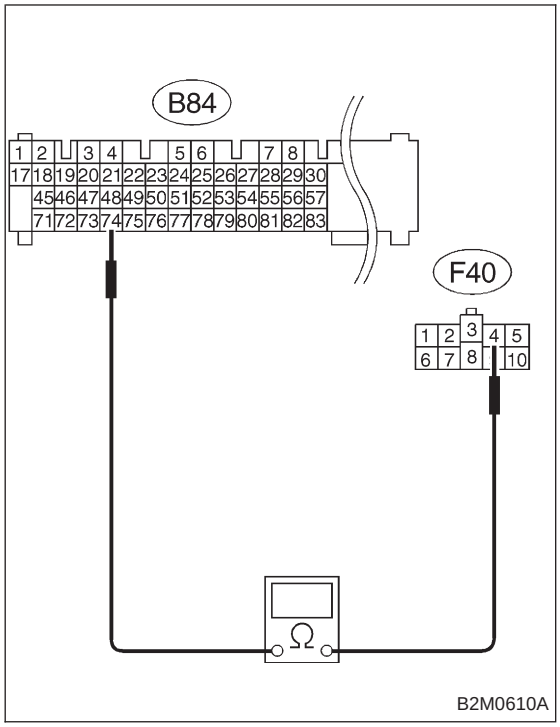

3) Measure resistance of harness between ECM and sub fan relay 1 (with A/C models) or main fan relay (without A/C models) connector.

CHECK : ***Connector & terminal (B84) No. 74 — (F40) No. 4: Is the resistance less than 1 Ω?***

YES : Go to next CHECK .

NO : Repair harness and connector.

NOTE:
In this case, repair the following:
- Open circuit in harness between ECM and sub fan relay 1 (with A/C models) or main fan relay (without A/C models) connector
- Poor contact in coupling connector (F45)
- Replace diode (A/C)

CHECK : ***Is there poor contact in ECM or sub fan relay 1 (with A/C models) or main fan relay (without A/C models) connector?***

YES : Repair poor contact in ECM or sub fan relay 1 (with A/C models) or main fan relay (without A/C models) connector.

NO : Contact with SOA service.

NOTE:
Inspection by DTM is required, because probable cause is deterioration of multiple parts.

OBD	(FB1)
P1502	<FAN_F>

OBD0538

CU: DTC P1502
— RADIATOR FAN FUNCTION PROBLEM —

DTC DETECTING CONDITION:

- Two consecutive driving cycles with fault

TROUBLE SYMPTOM:

- Occurrence of noise
- Overheating

WIRING DIAGRAM:

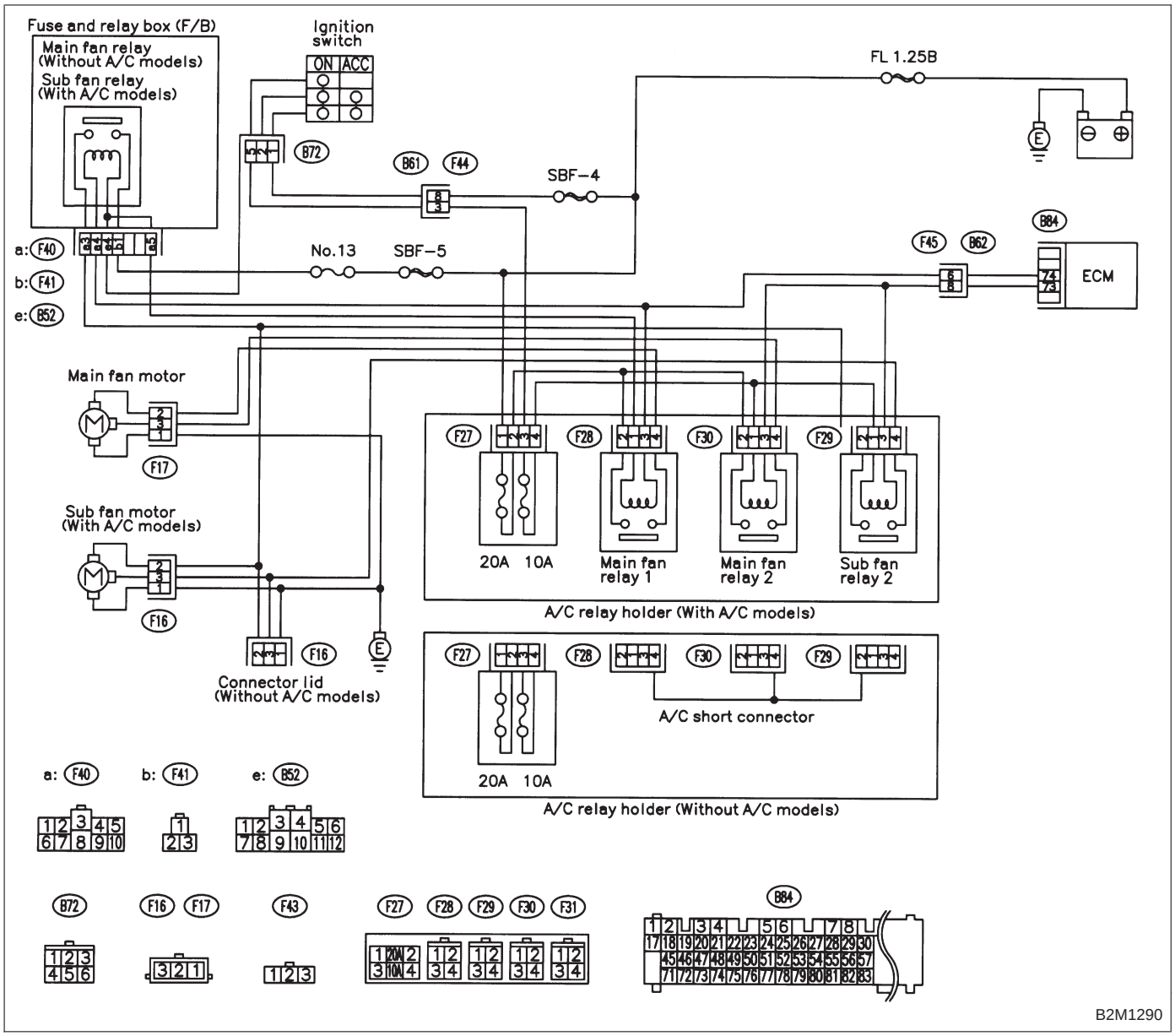

B2M1290

CAUTION:
After repair or replacement of faulty parts, conduct CLEAR MEMORY and INSPECTION MODES.
<Ref. to 2-7 [T3D0] and [T3E0].>

NOTE:
If the vehicle, with the engine idling, is placed very close to a wall or another vehicle, preventing normal cooling function, the OBD system may detect malfunction.

10CU1	**CHECK ANY OTHER DTC (BESIDE DTC P1502) ON DISPLAY.**

CHECK : ***Is there any other DTC on display?***

YES : Inspect the relevant DTC using “10. Diagnostics Chart with Trouble Code”. <Ref. to 2-7 [T10A0].>

NO : Check engine cooling system. <Ref. to 2-5 [K100].>

OBD (FB1)

P1507 <ISC_SHI>

B2M1140

CV: DTC P1507 — IDLE CONTROL SYSTEM MALFUNCTION (FAIL-SAFE) —

DTC DETECTING CONDITION:

- Two consecutive driving cycles with fault

TROUBLE SYMPTOM:

- Engine keeps running at higher revolution than specified idling revolution.

WIRING DIAGRAM:

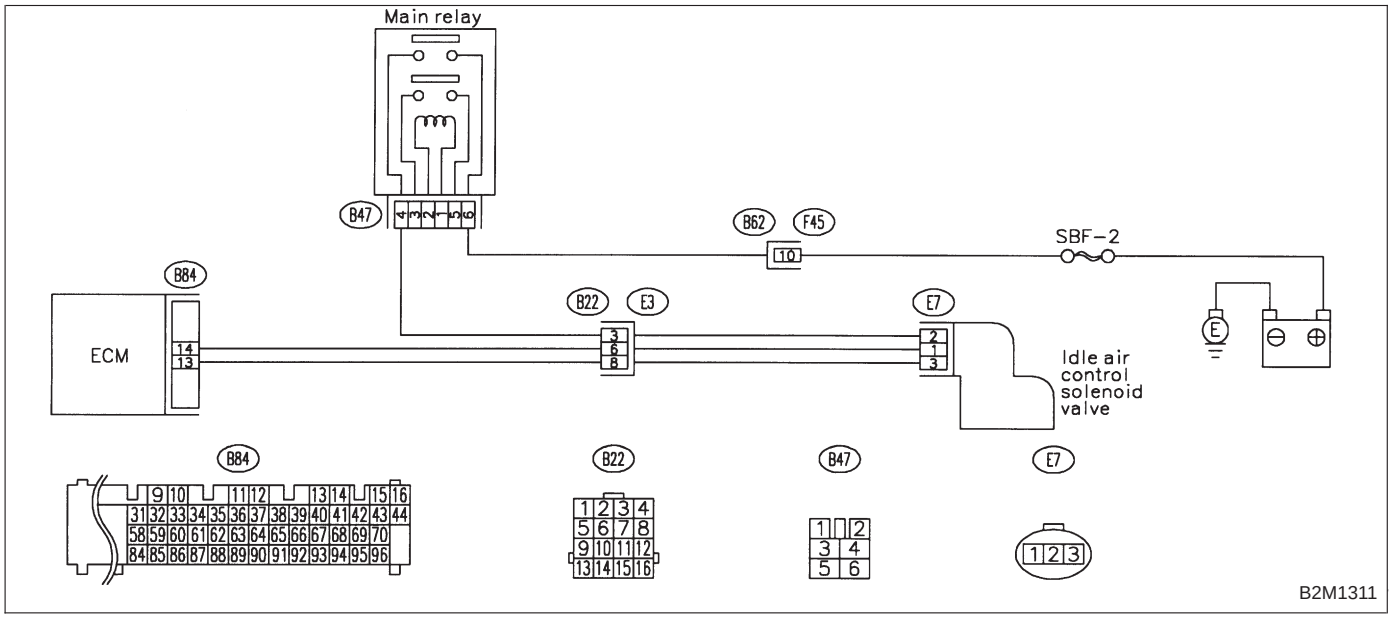

CAUTION:
After repair or replacement of faulty parts, conduct CLEAR MEMORY and INSPECTION MODES.
<Ref. to 2-7 [T3D0] and [T3E0].>

10CV1	CHECK DTC P0505 ON DISPLAY.

CHECK : ***Does the Subaru select monitor or OBD-II general scan tool indicate DTC P0505?***

YES : Inspect DTC P0505 using “10. Diagnostics Chart with Trouble Code”. <Ref. to 2-7 [T10A0].>

NOTE:
In this case, it is not necessary to inspect DTC P1507.

NO : Go to step **10CV2**.

10CV2	CHECK AIR INTAKE SYSTEM.

1) Turn ignition switch to ON.
2) Start engine, and idle it.

CHECK : ***Is there a fault in air intake system?***

NOTE:
Check the following items.
- Loose installation of intake manifold, idle air control solenoid valve and throttle body
- Cracks of intake manifold gasket, idle air control solenoid valve gasket and throttle body gasket
- Loose connections and cracks of idle air control solenoid valve by-pass hoses
- Disconnections of vacuum hoses

YES : Repair air suction and leaks.

NO : Replace idle air control solenoid valve.

OBD (FB1)

P1520 <FAN_1HI>

B2M1141

CW: DTC P1520 — RADIATOR FAN RELAY 1 CIRCUIT HIGH INPUT —

DTC DETECTING CONDITION:

- Two consecutive driving cycles with fault

TROUBLE SYMPTOM:

- Radiator fan does not operate properly.
- Overheating

WIRING DIAGRAM:

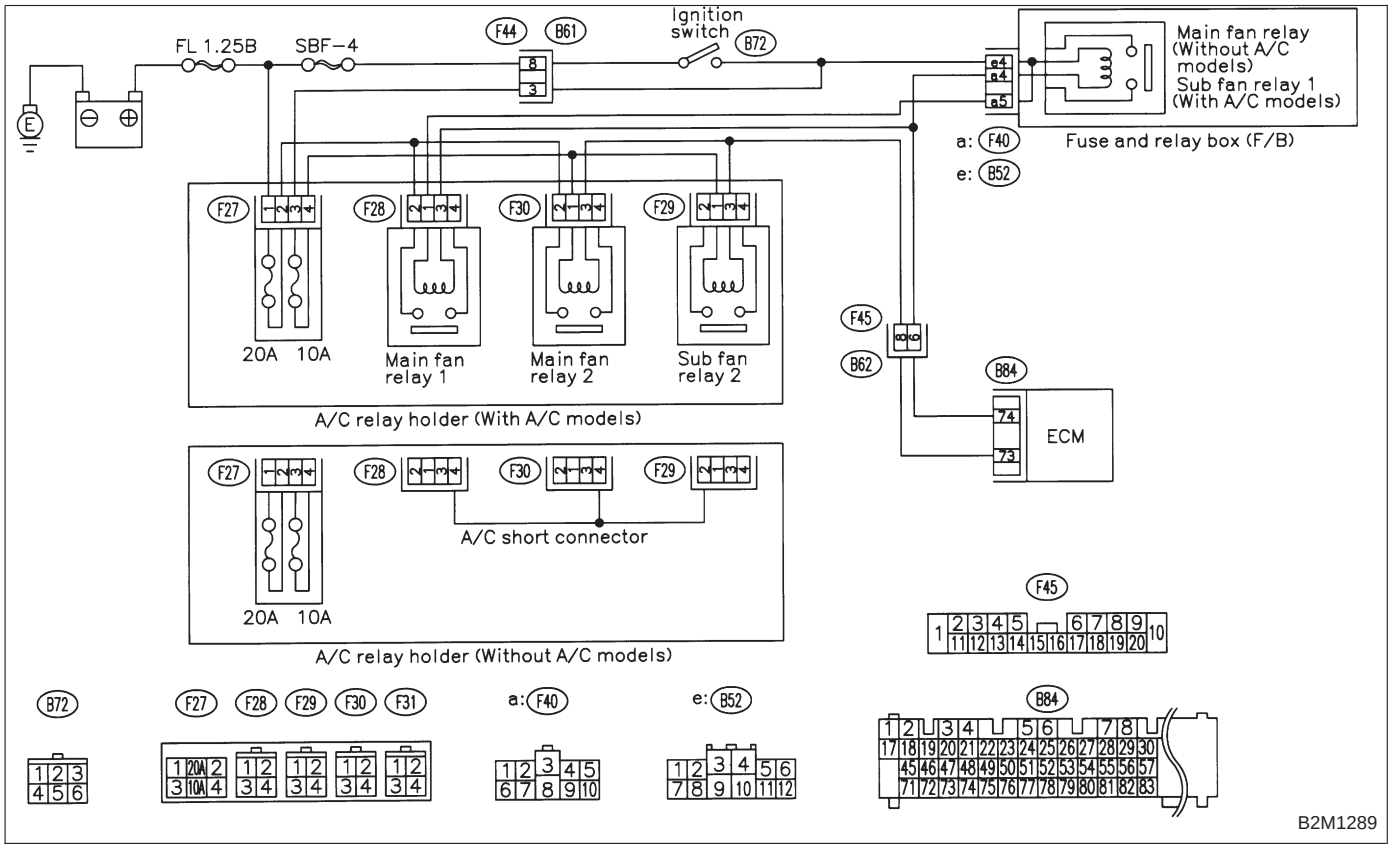

CAUTION:
After repair or replacement of faulty parts, conduct CLEAR MEMORY and INSPECTION MODE.
<Ref. to 2-7 [T3D0] and [T3E0].>

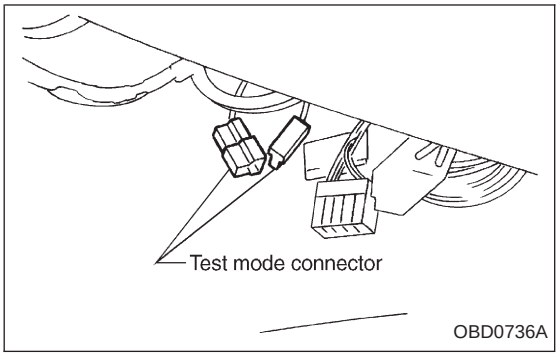

10CW1	CHECK OUTPUT SIGNAL FROM ECM.

1) Turn ignition switch to OFF.
2) Connect test mode connector at the lower portion of instrument panel (on the driver's side), to the side of the center console box.
3) Turn ignition switch to ON.

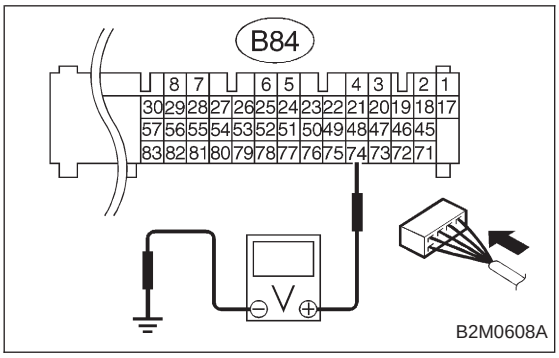

4) Measure voltage between ECM and chassis ground.

CHECK : ***Connector & terminal (B84) No. 74 (+) — Chassis ground: Does voltage change between 0 and 10 volts?***

NOTE:
Radiator fan relay operation check can be executed using Subaru Select Monitor (Function mode: FD03). For procedure, refer to "COMPULSORY VALVE OPERATION CHECK MODE". <Ref. to 2-7 [T3F0].>

YES : Go to step **10CW2**.

NO : Even if MIL lights up, the circuit has returned to a normal condition at this time. In this case, repair poor contact in ECM connector.

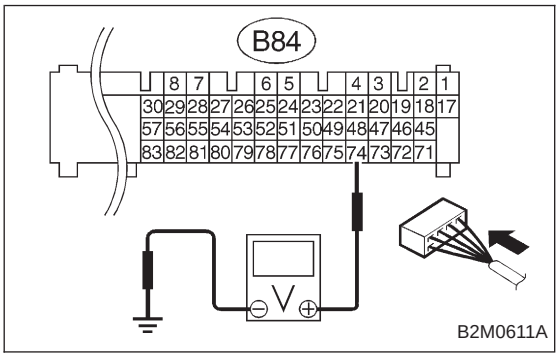

10CW2	CHECK SHORT CIRCUIT IN RADIATOR FAN RELAY 1 CONTROL CIRCUIT.

1) Turn ignition switch to OFF.
2) Remove main fan relay 1 and sub fan relay 1. (with A/C models)
Remove main fan relay. (without A/C models)
3) Disconnect test mode connector.
4) Turn ignition switch to ON.
5) Measure voltage between ECM and chassis ground.

CHECK : ***Connector & terminal (B84) No. 74 (+) — Chassis ground (−): Is the voltage more than 10 V?***

YES : Repair battery short circuit in radiator fan relay 1 control circuit. After repair, replace ECM.

NO : Go to next CHECK .

CHECK : ***Is there poor contact in ECM connector?***

YES : Repair poor contact in ECM connector.

NO : Replace ECM.

OBD (FB1)

P1540 <VSP_S>

B2M1142

CX: DTC P1540 — VEHICLE SPEED SENSOR MALFUNCTION 2 —

DTC DETECTING CONDITION:

- Immediately at fault recognition

WIRING DIAGRAM:

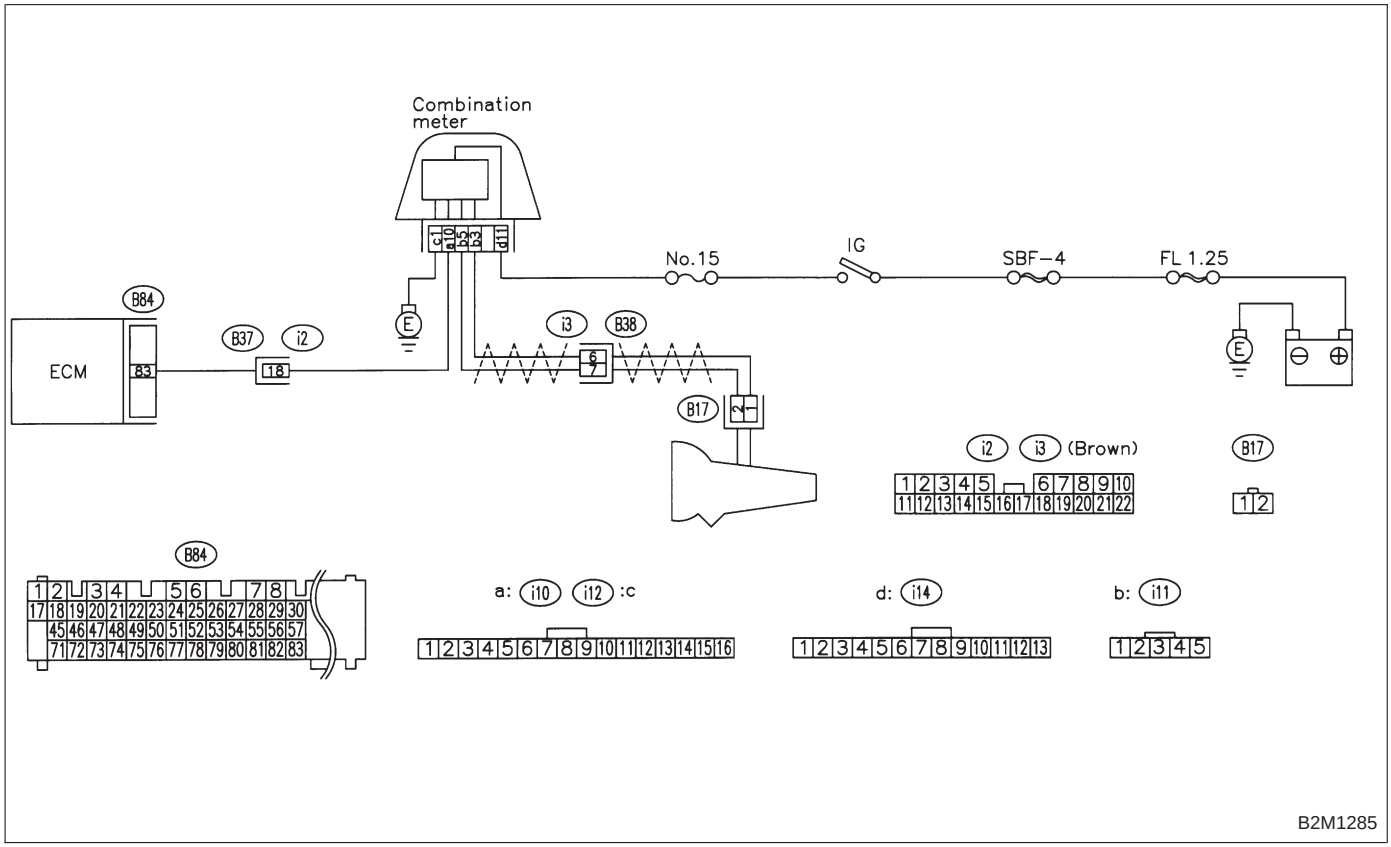

B2M1285

CAUTION:
After repair or replacement of faulty parts, conduct CLEAR MEMORY and INSPECTION MODES.
<Ref. to 2-7 [T3D0] and [T3E0].>

10CX1	CHECK SPEEDOMETER OPERATION IN COMBINATION METER.

CHECK : ***Does speedometer operate normally?***

YES : Go to step **10CX2**.

NO : Check speedometer and vehicle speed sensor <Ref. to 6-2 [K3A0].>.

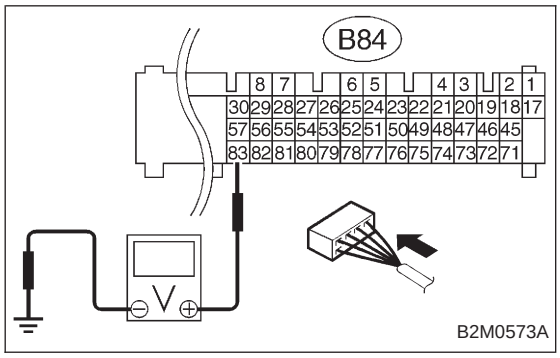

10CX2	CHECK HARNESS BETWEEN ECM AND COMBINATION METER CONNECTOR.

1) Turn ignition switch to OFF.
2) Disconnect connector from TCM.
3) Turn ignition switch to ON.
4) Measure voltage between ECM and chassis ground.

CHECK : ***Connector & terminal***
(B84) No. 83 (+) — Chassis ground (−):
Is the voltage more than 2 V?

YES : Repair harness and connector.

NOTE:
In this case, repair the following:
- Open circuit in harness between ECM and combination meter connector
- Poor contact in ECM connector
- Poor contact in combination meter connector
- Poor contact in coupling connector (B37)

NO : Go to step **10CX3**.

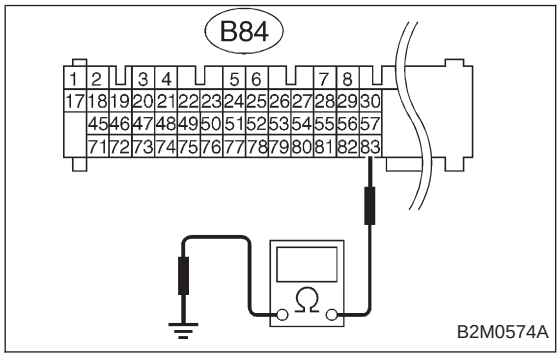

10CX3	CHECK HARNESS BETWEEN ECM AND COMBINATION METER CONNECTOR.

1) Turn ignition switch to OFF.
2) Disconnect connector from ECM.
3) Measure resistance of harness between ECM connector and chassis ground.

CHECK : ***Connector & terminal***
(B84) No. 83 — Chassis ground:
Is the resistance less than 10 Ω?

YES : Repair ground short circuit in harness between ECM and combination meter connector.

NO : Repair poor contact in ECM connector.

OBD	(FB1)
P1700	<ATTH>

OBD0501

CY: DTC P1700 — THROTTLE POSITION SENSOR CIRCUIT MALFUNCTION FOR AUTOMATIC TRANSMISSION —

DTC DETECTING CONDITION:

- Two consecutive driving cycles with fault

TROUBLE SYMPTOM:

- Shift point too high or too low; engine brake not effected in “3” range; excessive shift shock; excessive tight corner “braking”

WIRING DIAGRAM:

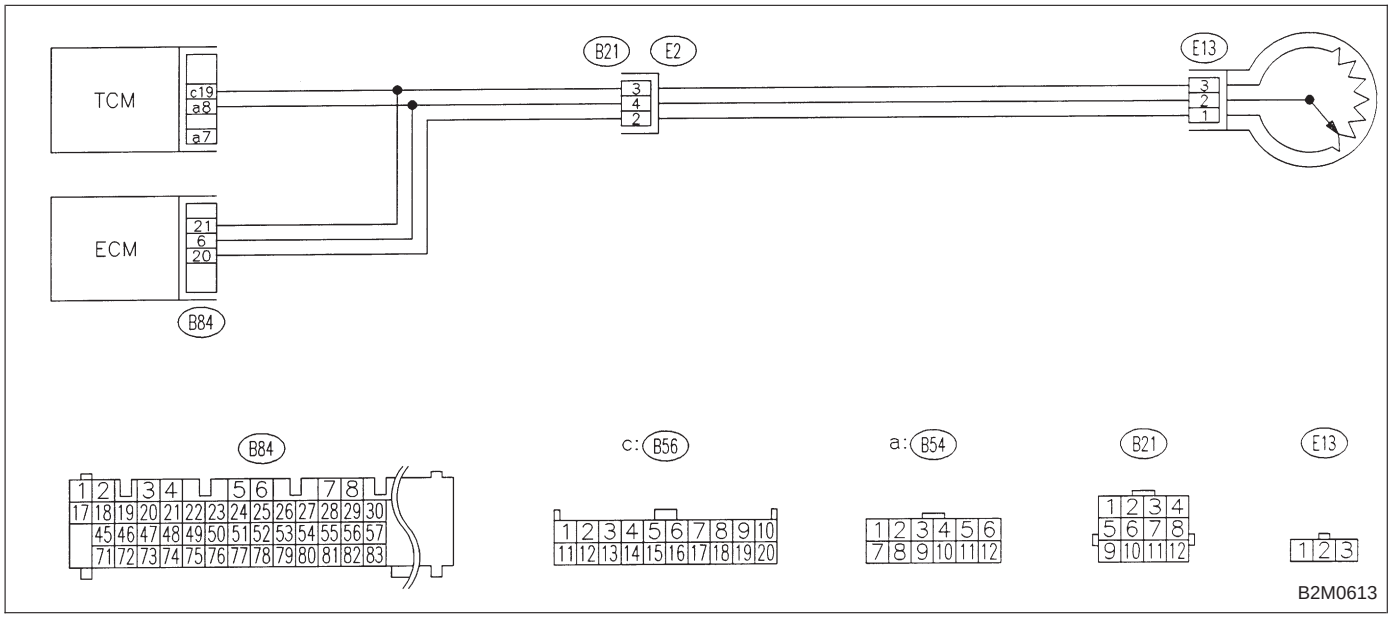

CAUTION:
After repair or replacement of faulty parts, conduct CLEAR MEMORY and INSPECTION MODES.
<Ref. to 2-7 [T3D0] and [T3E0].>

10CY1	CHECK DTC P1700 ON DISPLAY.

CHECK : ***Does the Subaru select monitor or OBD-II general scan tool indicate DTC P1700?***

YES : Check throttle position sensor circuit. <Ref. to 3-2 [T7K0].>

NO : It is not necessary to inspect DTC P1700.

OBD (FB1)

P1701 <ATCRS>

B2M0669

CZ: DTC P1701 — CRUISE CONTROL SET SIGNAL CIRCUIT MALFUNCTION FOR AUTOMATIC TRANSMISSION —

DTC DETECTING CONDITION:

- Two consecutive driving cycles with fault

WIRING DIAGRAM:

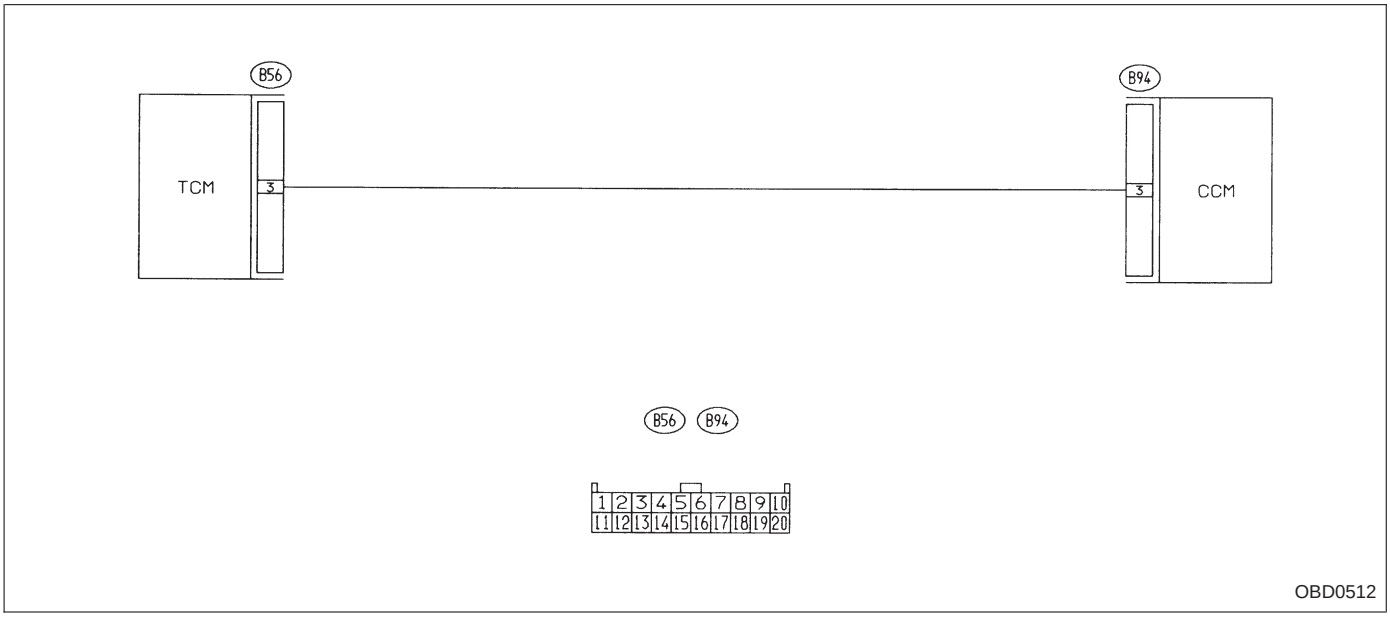

CAUTION:
After repair or replacement of faulty parts, conduct CLEAR MEMORY and INSPECTION MODES.
<Ref. to 2-7 [T3D0] and [T3E0].>

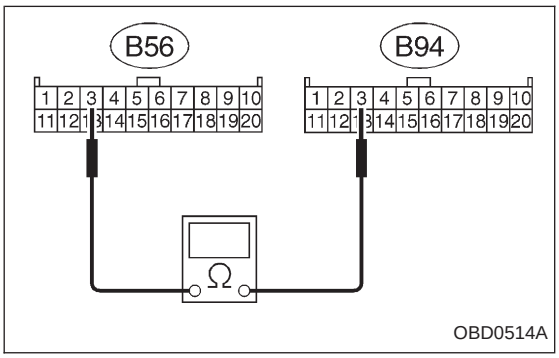

10CZ1	CHECK HARNESS BETWEEN TCM AND CCM CONNECTOR.

1) Turn ignition switch to OFF.
2) Disconnect connectors from TCM and CCM.
3) Measure resistance of harness between TCM and CCM connector.

CHECK : ***Connector & terminal (B56) No. 3 — (B94) No. 3: Is the resistance less than 1 Ω?***

YES : Go to next step 4).

NO : Repair open circuit in harness between TCM and CCM connector.

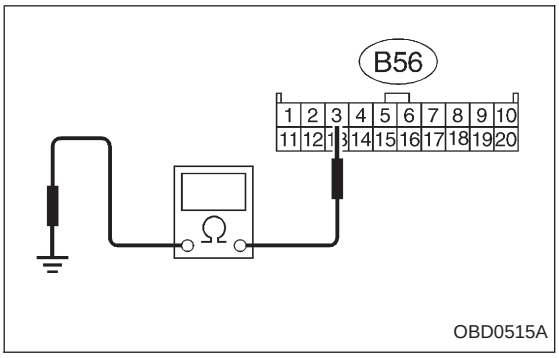

4) Measure resistance of harness between TCM and chassis ground.

CHECK : ***Connector & terminal (B56) No. 3 — Chassis ground: Is the resistance less than 10 Ω?***

YES : Repair short circuit in harness between TCM and CCM connector.

NO : Go to step **10CZ2**.

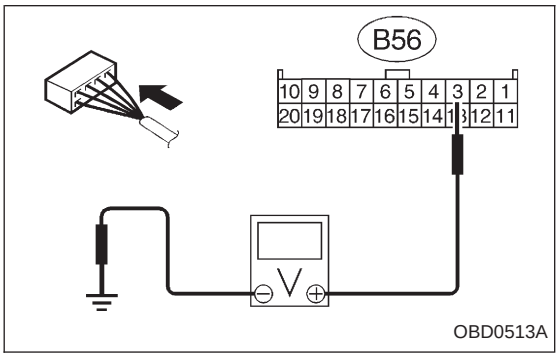

10CZ2	CHECK INPUT SIGNAL FOR TCM.

1) Connect connector to TCM and CCM.
2) Lift-up the vehicle or set the vehicle on free rollers.

CAUTION:
On AWD models, raise all wheels off ground.

3) Start the engine.
4) Cruise control main switch to ON.
5) TCS OFF switch to ON. (with TCS models only)
6) Move selector lever to “D” and slowly increase vehicle speed to 50 km/h (31 MPH).
7) Cruise control set switch to ON.
8) Measure voltage between TCM and chassis ground.

CHECK : ***Connector & terminal (B56) No. 3 (+) — Chassis ground (−): Is the resistance less than 1 V?***

YES : Go to next CHECK .

NO : Check cruise control set circuit. <Ref. to 6-2 [T7A0].>

CHECK : ***Is there poor contact in TCM connector?***

YES : Repair poor contact in TCM connector.

NO : Replace TCM.

OBD (FB1)

P1702<ATDIAG_LO>

B2M1143

DA: DTC P1702 — AUTOMATIC TRANSMISSION DIAGNOSIS INPUT SIGNAL CIRCUIT LOW INPUT —

DTC DETECTING CONDITION:

- Two consecutive driving cycles with fault

WIRING DIAGRAM:

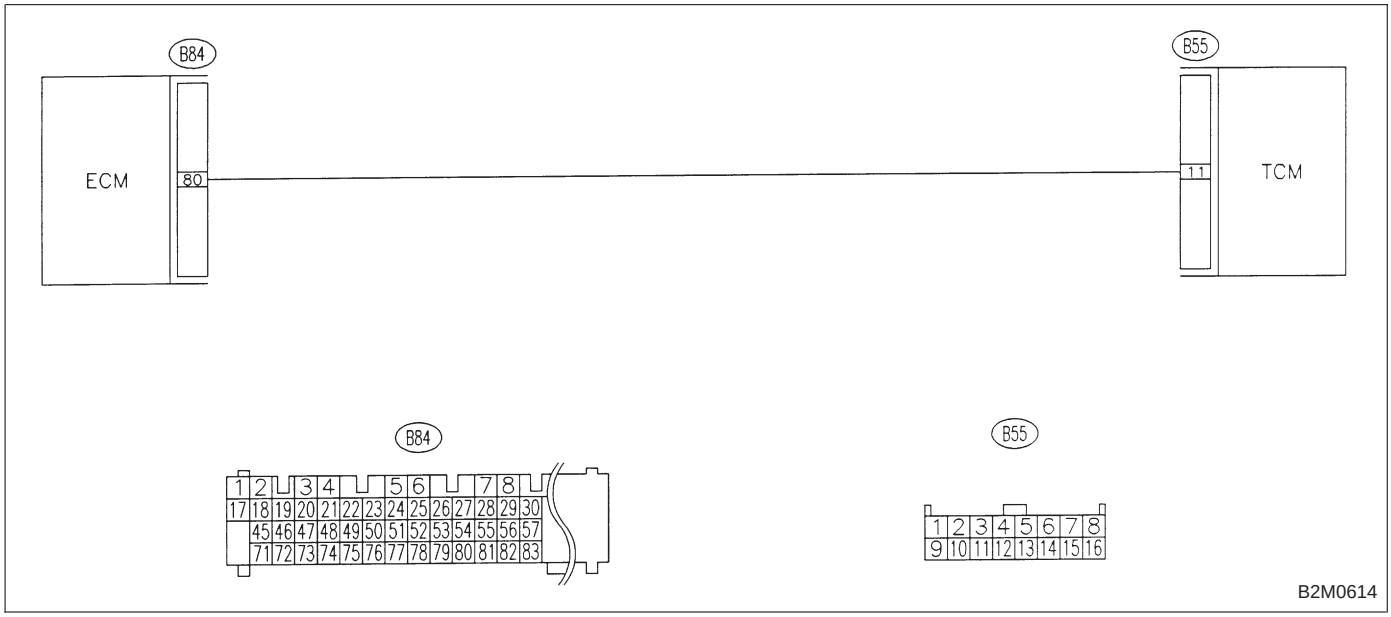

CAUTION:
After repair or replacement of faulty parts, conduct CLEAR MEMORY and INSPECTION MODES.
<Ref. to 2-7 [T3D0] and [T3E0].>

10DA1	CHECK TRANSMISSION TYPE.

CHECK : ***Is transmission type AT?***

YES : Go to step **10DA2**.

NO : Check AT/MT identification circuit. <Ref. to 2-7 [T10DD0].>

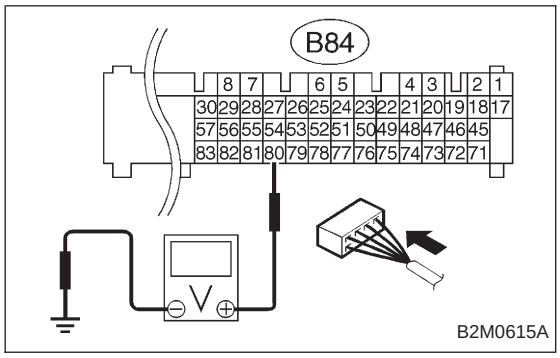

10DA2	CHECK HARNESS BETWEEN ECM AND TCM CONNECTOR.

1) Turn ignition switch to ON.
2) Measure voltage between ECM and chassis ground.

CHECK : ***Connector & terminal (B84) No. 80 (+) — Chassis ground (−): Is the voltage less than 1 V?***

YES : Go to step **10DA3**.

NO : Even if MIL lights up, the circuit has returned to a normal condition at this time.

NOTE:
In this case, repair the following:
- Poor contact in ECM connector
- Poor contact in TCM connector

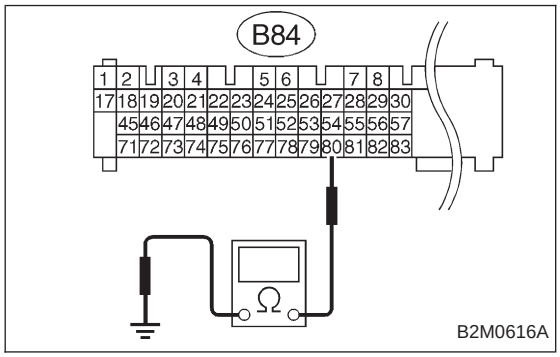

10DA3	CHECK HARNESS BETWEEN ECM AND TCM CONNECTOR.

1) Turn ignition switch to OFF.
2) Disconnect connector from ECM and TCM.
3) Measure resistance of harness between ECM and chassis ground.

CHECK : ***Connector & terminal (B84) No. 80 — Chassis ground: Is the resistance less than 10 Ω?***

YES : Repair ground short circuit in harness between ECM and TCM connector.

NO : Go to step **10DA4**.

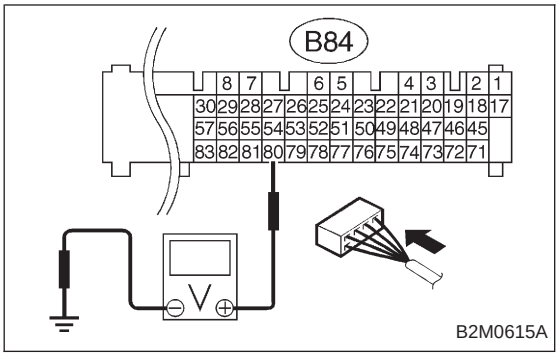

10DA4	CHECK ECM.

1) Connect connector to ECM.
2) Turn ignition switch to ON.
3) Measure voltage between ECM and chassis ground.

CHECK : ***Connector & terminal (B84) No. 80 (+) — Chassis ground (−): Is the voltage more than 5 V?***

YES : Replace TCM.

NO : Replace ECM.

OBD (FB1)

P1722<ATDIAG_HI>

B2M1144

DB: DTC P1722 — AUTOMATIC TRANSMISSION DIAGNOSIS INPUT SIGNAL CIRCUIT HIGH INPUT —

DTC DETECTING CONDITION:

- Two consecutive driving cycles with fault

WIRING DIAGRAM:

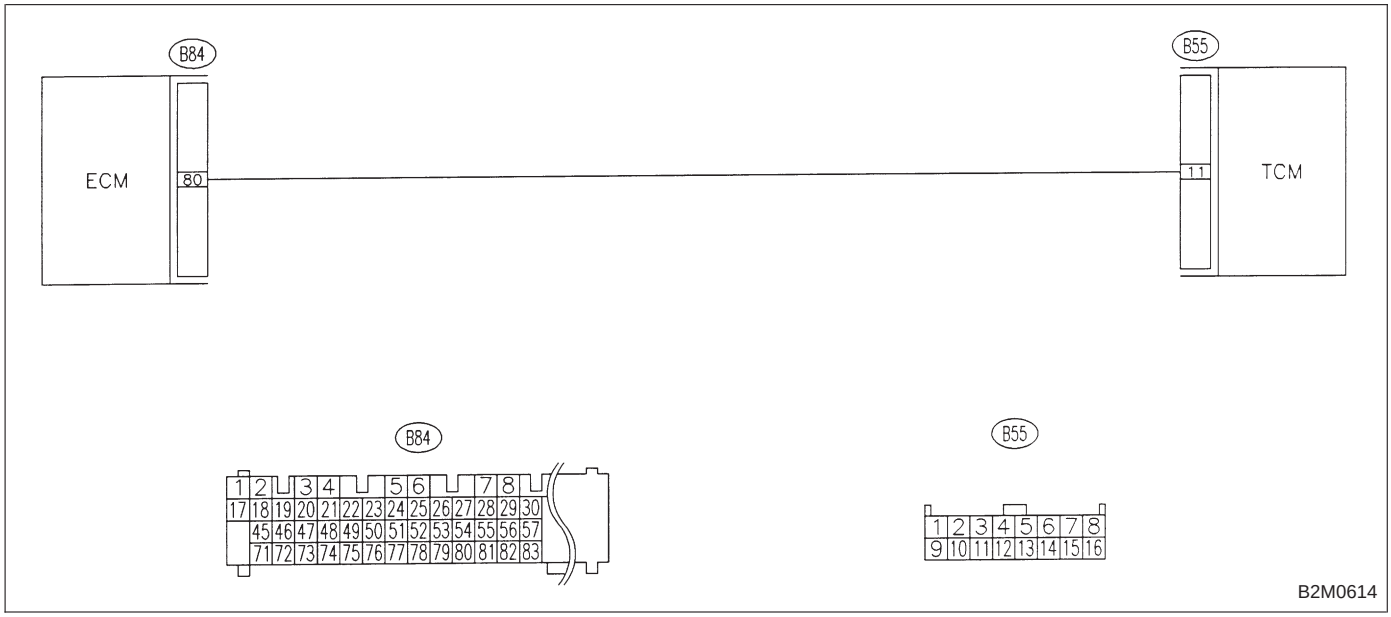

CAUTION:
After repair or replacement of faulty parts, conduct CLEAR MEMORY and INSPECTION MODES.
<Ref. to 2-7 [T3D0] and [T3E0].>

10DB1	CHECK TRANSMISSION TYPE.

CHECK : ***Is transmission type AT?***

YES : Go to step **10DB2**.

NO : Check AT/MT identification circuit. <Ref. to 2-7 [T10DD0].>

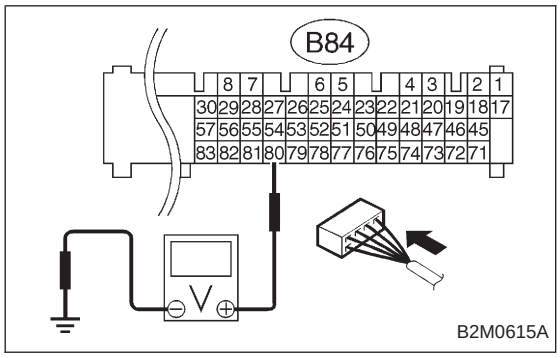

10DB2	CHECK HARNESS BETWEEN ECM AND TCM CONNECTOR.

1) Turn ignition switch to ON.
2) Measure voltage between ECM and chassis ground.

CHECK : ***Connector & terminal (B84) No. 80 (+) — Chassis ground (−): Is the voltage more than 10 V?***

YES : Repair battery short circuit in harness between ECM and TCM connector. After repair, replace ECM.

NO : Go to step **10DB3**.

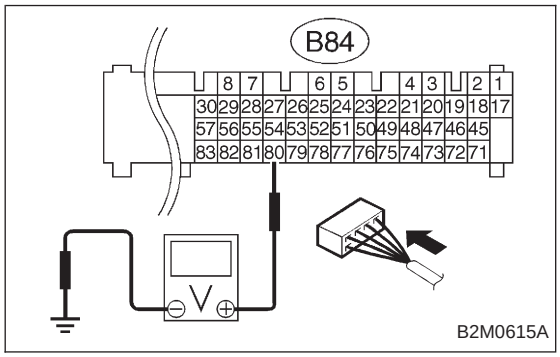

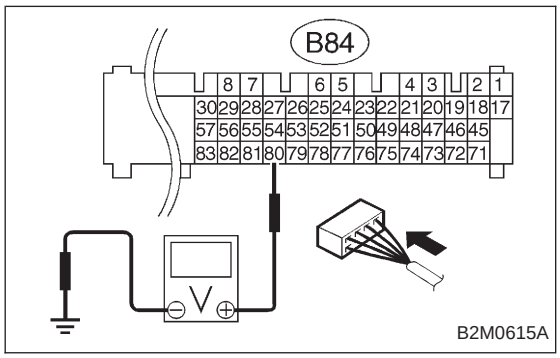

10DB3	CHECK HARNESS BETWEEN ECM AND TCM CONNECTOR.

Measure voltage between ECM connector and chassis ground.

CHECK : ***Connector & terminal (B84) No. 80 (+) — Chassis ground (−): Is the voltage more than 4 V?***

YES : Go to step **10DB4**.

NO : Go to next CHECK .

CHECK : ***Connector & terminal (B84) No. 80 (+) — Chassis ground (−): Is the voltage less than 1 V?***

YES : Repair poor contact in ECM connector.

NO : Go to next CHECK .

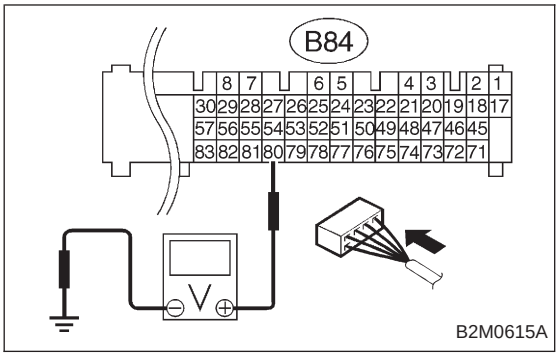

CHECK : ***Connector & terminal (B84) No. 80 (+) — Chassis ground (−): Does the voltage change from 1 V to 4 V while monitoring the value with voltage meter?***

YES : Even if MIL lights up, the circuit has returned to a normal condition at this time.

NOTE:
In this case, repair the following:
- Poor contact in ECM connector
- Poor contact in TCM connector

NO : Contact with SOA service.

NOTE:
Inspection by DTM is required, because probable cause is deterioration of multiple parts.

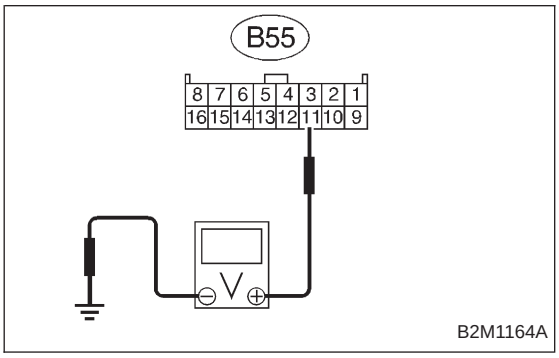

10DB4	CHECK HARNESS BETWEEN ECM AND TCM CONNECTOR.

Measure voltage between TCM and chassis ground.

CHECK : ***Connector & terminal (B55) No. 11 (+) — Chassis ground (−): Is the voltage more than 4 V?***

YES : Go to next CHECK .

NO : Repair open circuit in harness between ECM and TCM connector.

CHECK : ***Is there poor contact in TCM connector?***

YES : Repair poor contact in TCM connector.

NO : Check TCM power supply line and grounding line.

OBD (FB1)

P1742 <ATDIAG_2>

B2M1147

DC: DTC P1742
— AUTOMATIC TRANSMISSION DIAGNOSIS INPUT SIGNAL CIRCUIT MALFUNCTION —

DTC DETECTING CONDITION:

- Two consecutive driving cycles with fault

WIRING DIAGRAM:

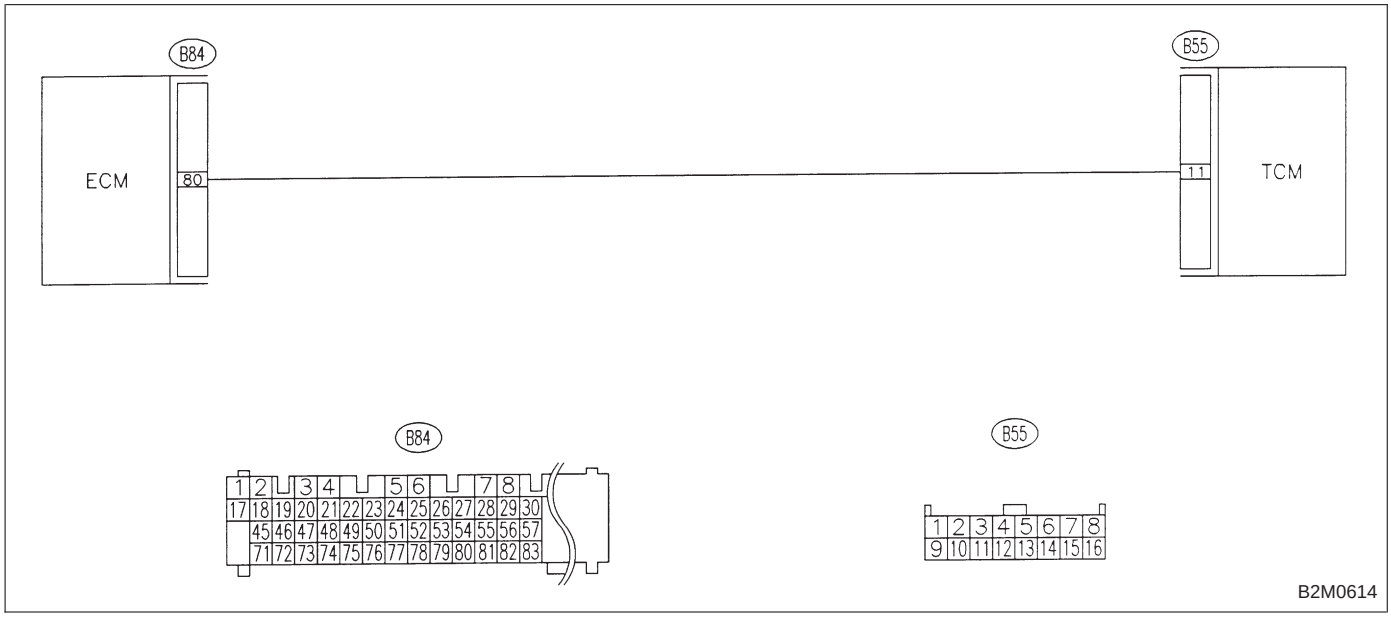

CAUTION:
After repair or replacement of faulty parts, conduct CLEAR MEMORY and INSPECTION MODES.
<Ref. to 2-7 [T3D0] and [T3E0].>

10DC1	CHECK TRANSMISSION TYPE.

CHECK : ***Is transmission type AT?***

YES : Go to step **10DC2**.

NO : Check AT/MT identification circuit. <Ref. to 2-7 [T10DD0].>

10DC2	CHECK DRIVING CONDITION.

1) Start and warm-up the engine until the radiator fan makes one complete rotation.
2) Drive the vehicle.

CHECK : ***Is AT shift control functioning properly?***

YES : Go to step **10DC3**.

NO : Replace TCM.

10DC3	CHECK ACCESSORY.

CHECK : ***Are car phone and/or CB installed on vehicle?***

YES : Repair grounding line of car phone or CB system.

NO : Replace TCM.

DD: — AT/MT IDENTIFICATION CIRCUIT MALFUNCTION [MT VEHICLES] —

WIRING DIAGRAM:

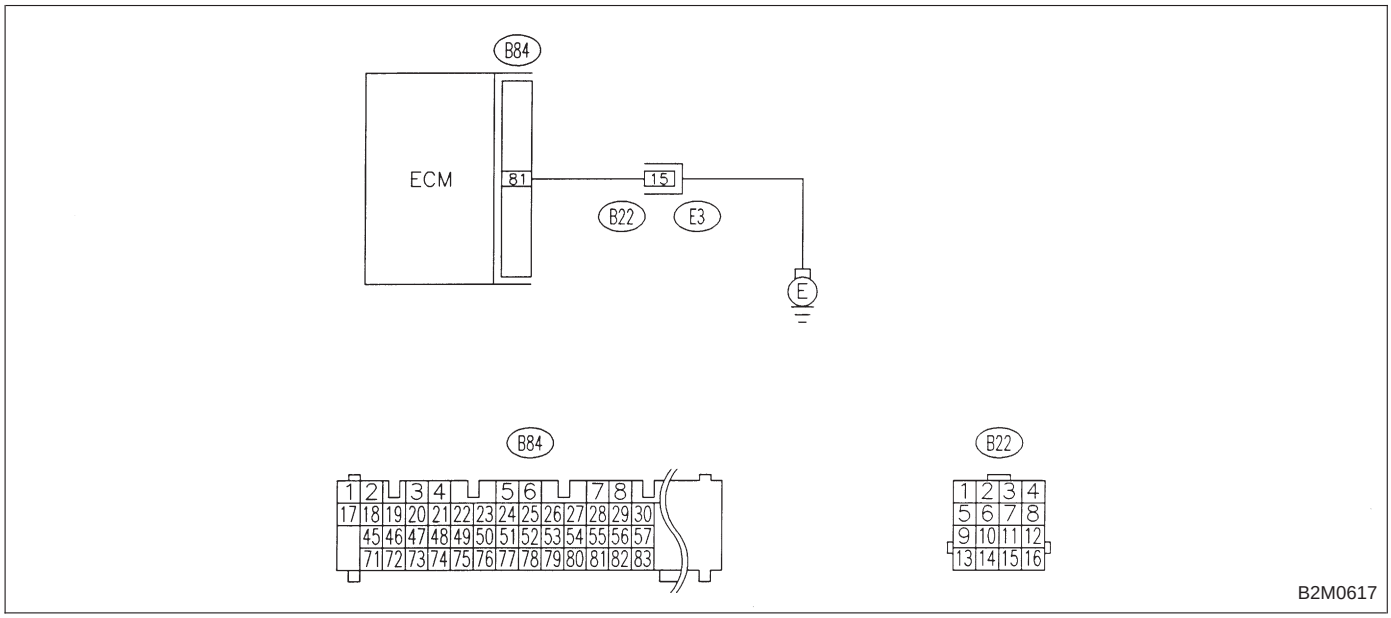

CAUTION:
After repair or replacement of faulty parts, conduct CLEAR MEMORY and INSPECTION MODES.
<Ref. to 2-7 [T3D0] and [T3E0].>

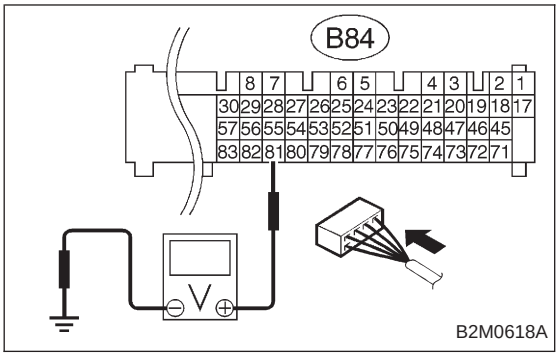

10DD1	CHECK HARNESS BETWEEN ECM CONNECTOR AND ENGINE GROUNDING TERMINAL.

1) Turn ignition switch to ON.
2) Measure voltage between ECM and chassis ground.

CHECK : ***Connector & terminal (B84) No. 81 (+) — Chassis ground (−): Is the voltage more than 2 V?***

YES : Repair harness and connector.

NOTE:
In this case, repair the following:
- Open circuit in harness between ECM connector and engine grounding terminal
- Poor contact in engine grounding terminal
- Poor contact in coupling connector (B22)

NO : Go to next CHECK .

CHECK : ***Is there poor contact in ECM connector?***

YES : Repair poor contact in ECM connector.

NO : Contact with SOA service.

NOTE:
Inspection by DTM is required, because probable cause is deterioration of multiple parts.