11. Diagnostic Chart with Trouble Code for RHD Vehicles

A: DIAGNOSTIC TROUBLE CODE (DTC) LIST

DTC No.	Abbreviation (Subaru Select Monitor)	Item	Page
P0101	QA—RLOW	Mass air flow sensor circuit range/performance problem (low input)	426
P0102	QA—LOW	Mass air flow sensor circuit low input	427
P0103	QA—HI	Mass air flow sensor circuit high input	428
P0106	PS—R2	Pressure sensor circuit range/performance problem	429
P0107	P—SLOW	Pressure sensor circuit low input	430
P0108	P—SHI	Pressure sensor circuit high input	431
P0116	TW—LOW	Engine coolant temperature sensor circuit low input	432
P0117	TW—HI	Engine coolant temperature sensor circuit high input	433
P0121	TH—RHI	Throttle position sensor circuit range/performance problem (high input)	434
P0122	THV—LOW	Throttle position sensor circuit low input	435
P0123	THV—HI	Throttle position sensor circuit high input	436
P0125	TW—CL	Insufficient coolant temperature for closed loop fuel control	437
P0130	FO2—V	Front oxygen sensor circuit malfunction	438
P0133	FO2—R	Front oxygen sensor circuit slow response	439
P0135	FO2H	Front oxygen sensor heater circuit malfunction	440
P0136	RO2—V	Rear oxygen sensor circuit malfunction	441
P0139	RO2—R	Rear oxygen sensor circuit slow response	442
P0141	RO2H	Rear oxygen sensor heater circuit malfunction	443
P0170	FUEL	Fuel trim malfunction	444
P0181	TNKT—F	Fuel temperature sensor A circuit range/performance problem	445
P0182	TNKT—LOW	Fuel temperature sensor A circuit low input	447
P0183	TNKT—HI	Fuel temperature sensor A circuit high input	450
P0261	INJ1	Fuel injector circuit low input - #1	453
P0262	INJ1—HI	Fuel injector circuit high input - #1	455
P0264	INJ2	Fuel injector circuit low input - #2	453
P0265	INJ2—HI	Fuel injector circuit high input - #2	455
P0267	INJ3	Fuel injector circuit low input - #3	453
P0268	INJ3—HI	Fuel injector circuit high input - #3	455
P0270	INJ4	Fuel injector circuit low input - #4	453
P0271	INJ4—HI	Fuel injector circuit high input - #4	455
P0301	MIS—1	Cylinder 1 misfire detected	457
P0302	MIS—2	Cylinder 2 misfire detected	457
P0303	MIS—3	Cylinder 3 misfire detected	457
P0304	MIS—4	Cylinder 4 misfire detected	457
P0325	KNOCK	Knock sensor circuit malfunction	459
P0335	CRANK	Crankshaft position sensor circuit malfunction	460
P0336	CRANK—R	Crankshaft position sensor circuit range/performance problem	461
P0340	CAM	Camshaft position sensor circuit malfunction	462

DTC No.	Abbreviation (Subaru Select Monitor)	Item	Page
P0341	CAM—R	Camshaft position sensor circuit range/performance problem	463
P0400	EGR	Exhaust gas recirculation flow malfunction	464
P0403	EGRSOL	Exhaust gas recirculation circuit low input	465
P0420	CAT	Catalyst system efficiency below threshold	466
P0440	EVAP	Evaporative emission control system malfunction	467
P0441	CPC—F	Evaporative emission control system incorrect purge flow	468
P0443	CPC	Evaporative emission control system purge control valve circuit low input	469
P0446	VCMSOL—LO	Evaporative emission control system vent control low input	470
P0451	TNKP—F	Evaporative emission control system pressure sensor range/performance problem	473
P0452	TNKP—LOW	Evaporative emission control system pressure sensor low input	474
P0453	TNKP—HI	Evaporative emission control system pressure sensor high input	479
P0461	FLVL—R	Fuel level sensor circuit range/performance problem	484
P0462	FLVL—LOW	Fuel level sensor circuit low input	486
P0463	FLVL—HI	Fuel level sensor circuit high input	492
P0500	VSP	Vehicle speed sensor malfunction	497
P0505	ISC	Idle control system malfunction	498
P0506	ISC—RLOW	Idle control system RPM lower than expected	499
P0507	ISC—RHI	Idle control system RPM higher than expected	500
P0600	—	Serial communication link malfunction	501
P0601	RAM	Internal control module memory check sum error	502
P0703	ATBRK	Brake switch input malfunction	503
P0705	ATRNG	Transmission range sensor circuit malfunction	504
P0710	ATF	Transmission fluid temperature sensor circuit malfunction	505
P0720	ATVSP	Output speed sensor (vehicle speed sensor 1) circuit malfunction	506
P0725	ATNE	Engine speed input circuit malfunction	507
P0731	ATGR1	Gear 1 incorrect ratio	508
P0732	ATGR2	Gear 2 incorrect ratio	508
P0733	ATGR3	Gear 3 incorrect ratio	508
P0734	ATGR4	Gear 4 incorrect ratio	508
P0740	ATLU—F	Torque converter clutch system malfunction	510
P0743	ATLU	Torque converter clutch system electrical	511
P0748	ATPL	Pressure control solenoid electrical	512
P0753	ATSFT1	Shift solenoid A electrical	513
P0758	ATSFT2	Shift solenoid B electrical	514
P0760	ATOVR—F	Shift solenoid C malfunction	515
P0763	ATOVR	Shift solenoid C electrical	516
P1100	ST—SWOFF	Starter switch circuit low input	517
P1101	N—SWOFF	Neutral position switch circuit high input [AT vehicles]	518
P1102	BR	Pressure sources switching solenoid valve circuit low input	519
P1103	TRQ	Engine torque control signal circuit malfunction	520
P1120	ST—SWON	Starter switch circuit high input	521
P1121	N—SWON	Neutral position switch circuit low input [AT vehicles]	522

DTC No.	Abbreviation (Subaru Select Monitor)	Item	Page
P1122	BR—HI	Pressure sources switching solenoid valve circuit high input	523
P1141	QA—RHI	Mass air flow sensor circuit range/performance problem (high input)	524
P1142	TH—RLOW	Throttle position sensor circuit range/performance problem (low input)	525
P1143	PS—RLOW	Pressure sensor circuit range/performance problem (low input)	526
P1144	PS—RHI	Pressure sensor circuit range/performance problem (high input)	527
P1400	PCVSOL—LO	Fuel tank pressure control solenoid valve circuit low input	528
P1420	PCVSOL—HI	Fuel tank pressure control solenoid valve circuit high input	532
P1421	EGRSOL—HI	Exhaust gas recirculation circuit high input	535
P1422	CPC—HI	Evaporative emission control system purge control valve circuit high input	536
P1423	VCMSOL—HI	Evaporative emission control system vent control high input	537
P1440	PCV—FLOW	Fuel tank pressure control system function problem (low input)	540
P1441	PCV—FHI	Fuel tank pressure control system function problem (high input)	541
P1442	FLVL—R2	Fuel level sensor circuit range/performance problem 2	542
P1500	FAN—1	Radiator fan relay 1 circuit low input	544
P1502	FAN—F	Radiator fan function problem	545
P1507	ISC—SHI	Idle control system malfunction (fail-safe)	546
P1520	FAN—1HI	Radiator fan relay 1 circuit high input	547
P1540	VSP—S	Vehicle speed sensor malfunction 2	548
P1700	ATTH	Throttle position sensor circuit malfunction for automatic transmission	549
P1701	ATCRS	Cruise control set signal circuit malfunction for automatic transmission	550
P1702	ATDIAG—LO	Automatic transmission diagnosis input signal circuit low input	551
P1722	ATDIAG—HI	Automatic transmission diagnosis input signal circuit high input	552
P1742	ATDIAG—2	Automatic transmission diagnosis input signal circuit malfunction	553

OBD (FB1)

P0101 <QA_RLOW>

B2M1056

B: DTC P0101 — MASS AIR FLOW SENSOR CIRCUIT RANGE/PERFORMANCE PROBLEM (LOW INPUT) —

WIRING DIAGRAM:

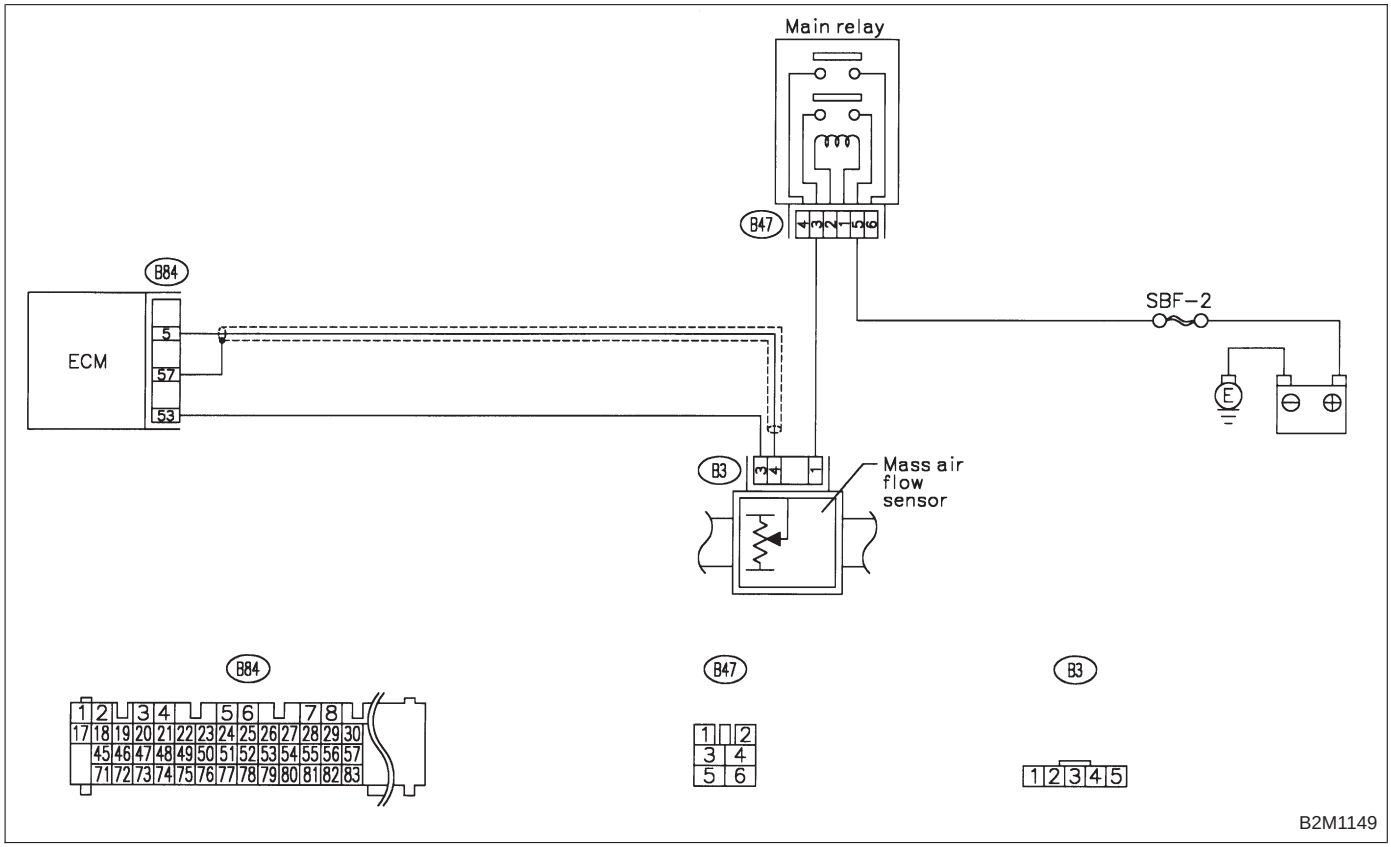

B2M1149

NOTE:
Check mass air flow sensor circuit.
<Ref. to 2-7 [T10B0].>

OBD (FB1)

P0102 <QA_LOW>

B2M1058

C: DTC P0102 — MASS AIR FLOW SENSOR CIRCUIT LOW INPUT —

WIRING DIAGRAM:

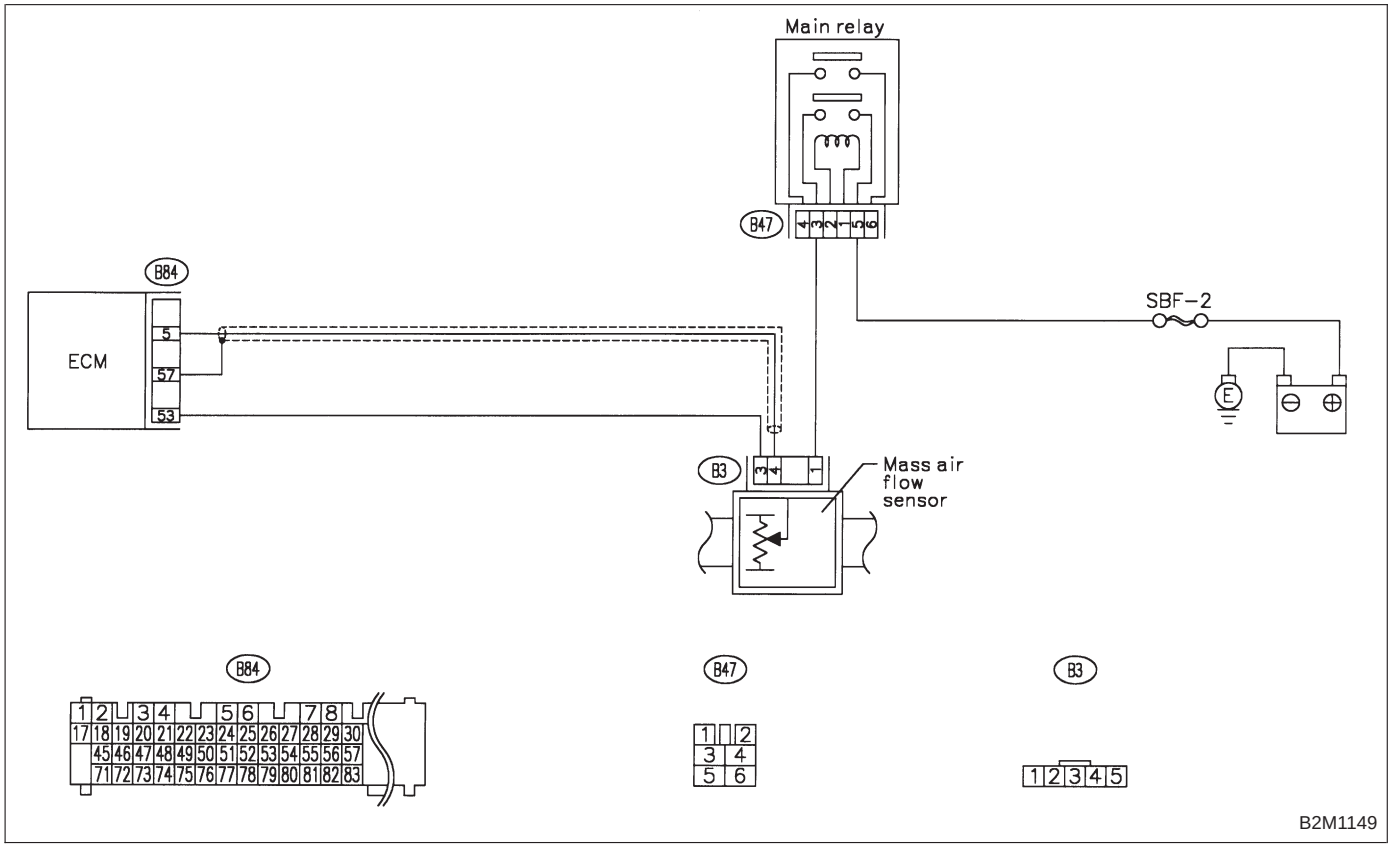

NOTE:
Check mass air flow sensor circuit.
<Ref. to 2-7 [T10C0].>

OBD (FB1)

P0103 <QA_HI>

B2M1061

D: DTC P0103 — MASS AIR FLOW SENSOR CIRCUIT HIGH INPUT —

WIRING DIAGRAM:

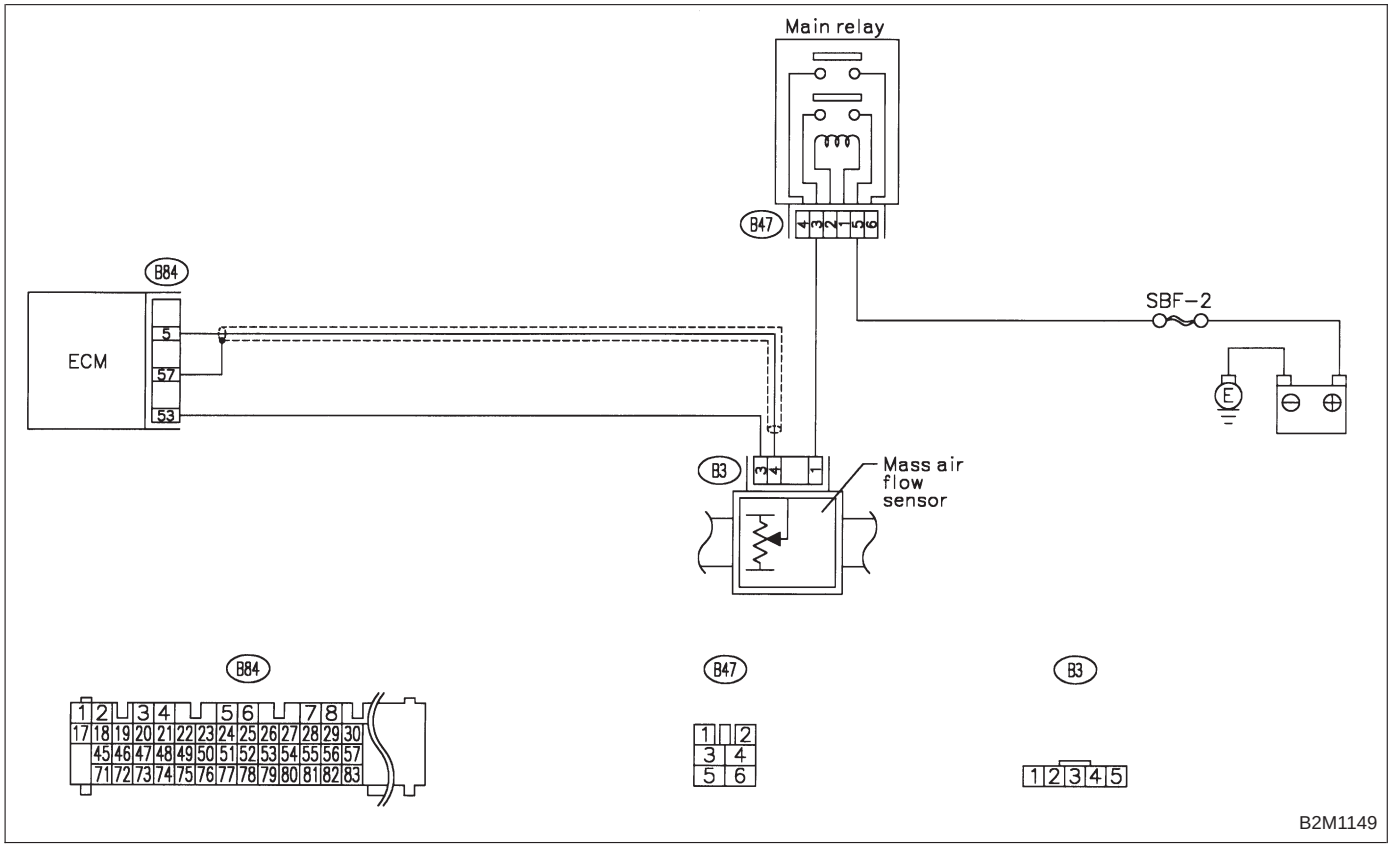

NOTE:
Check mass air flow sensor circuit.
<Ref. to 2-7 [T10D0].>

OBD (FB1)

P0106 <PS_R2>

B2M1062

E: DTC P0106 — PRESSURE SENSOR CIRCUIT RANGE/PERFORMANCE PROBLEM —

WIRING DIAGRAM:

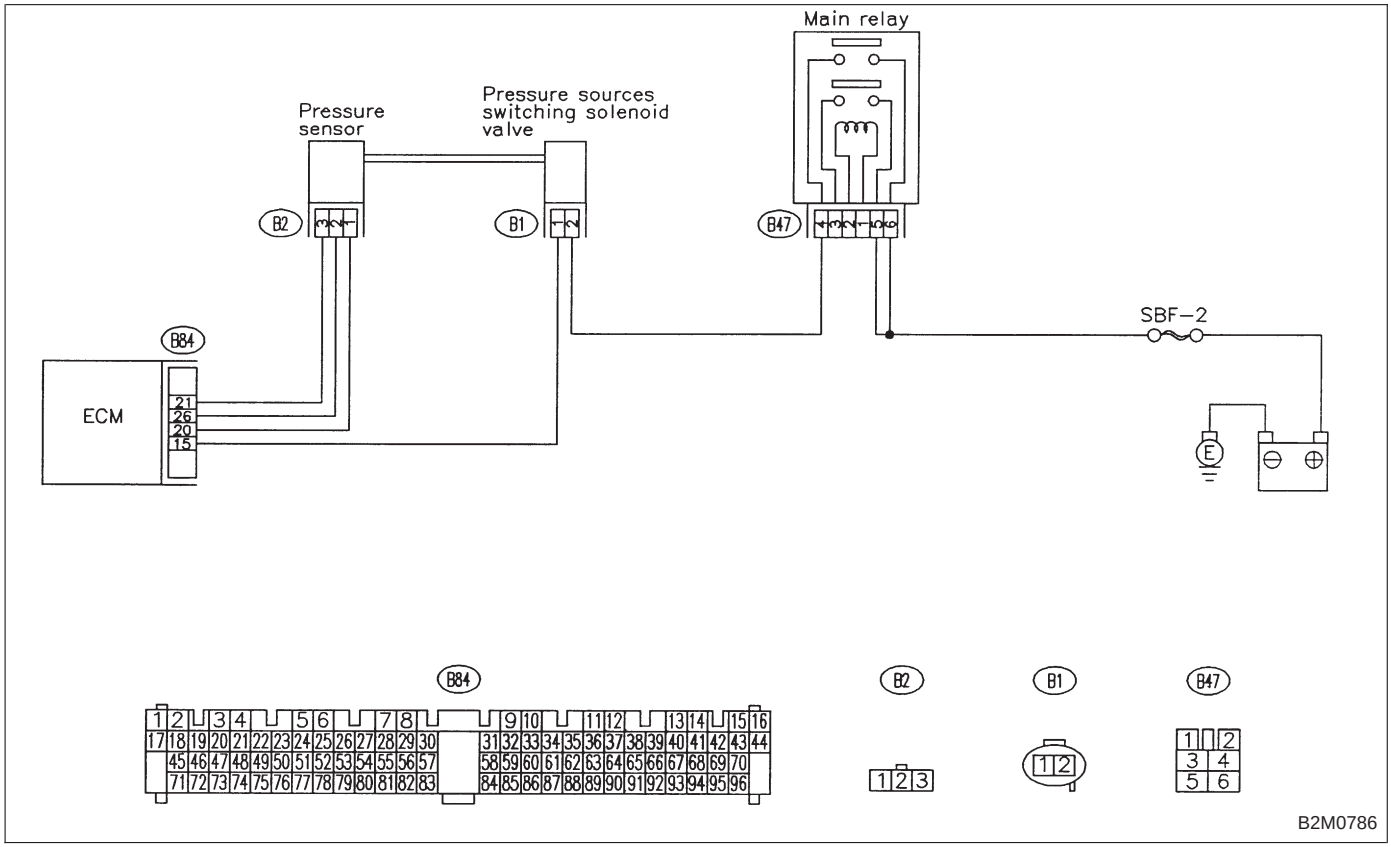

NOTE:
Check pressure sensor circuit.
<Ref. to 2-7 [T10E0].>

OBD (FB1)

P0107 <P_SLOW>

B2M1064

F: DTC P0107 — PRESSURE SENSOR CIRCUIT LOW INPUT —

WIRING DIAGRAM:

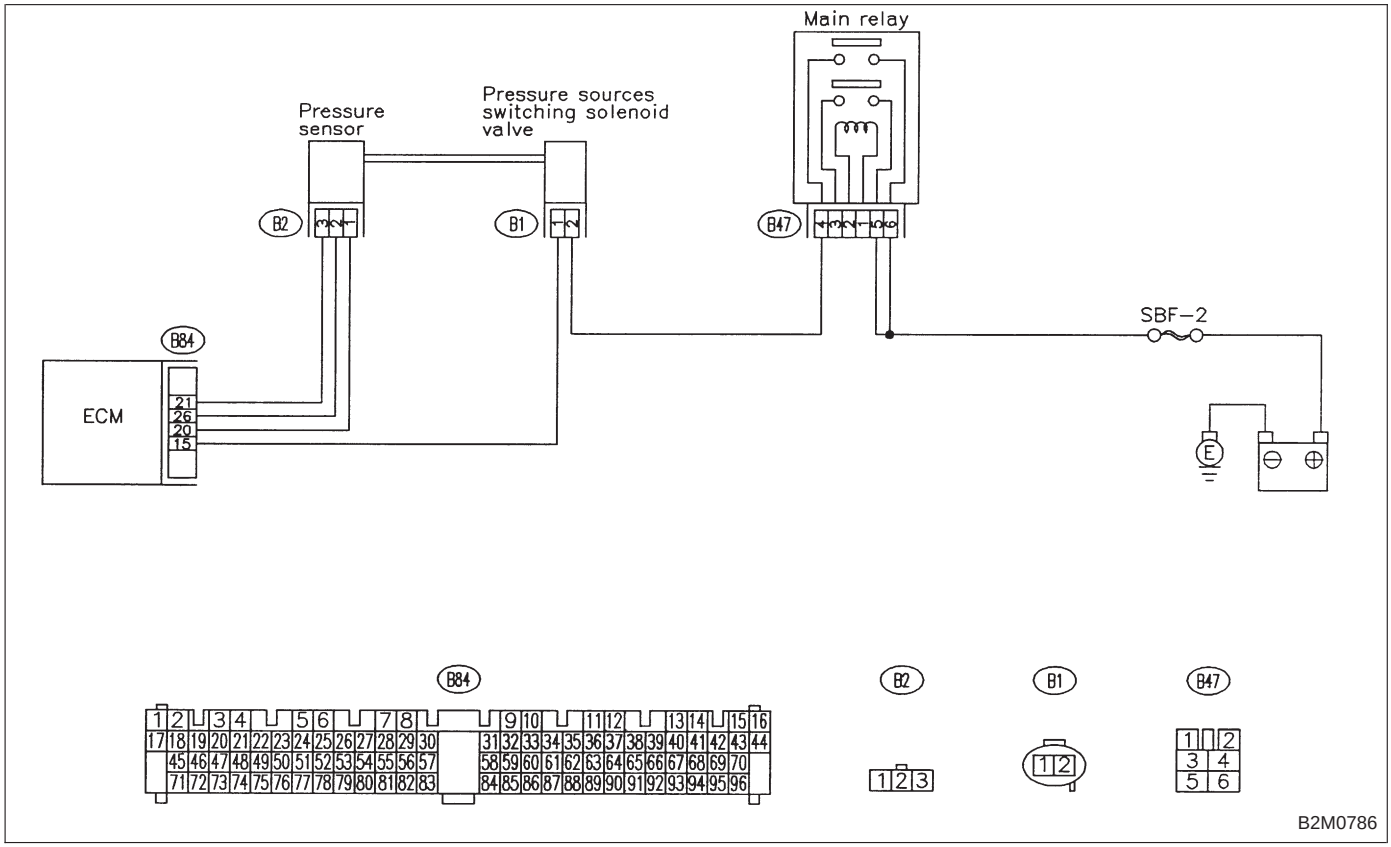

NOTE:
Check pressure sensor circuit.
<Ref. to 2-7 [T10F0].>

OBD (FB1)
P0108 <P_SHI>
B2M1066

G: DTC P0108 — PRESSURE SENSOR CIRCUIT HIGH INPUT —

WIRING DIAGRAM:

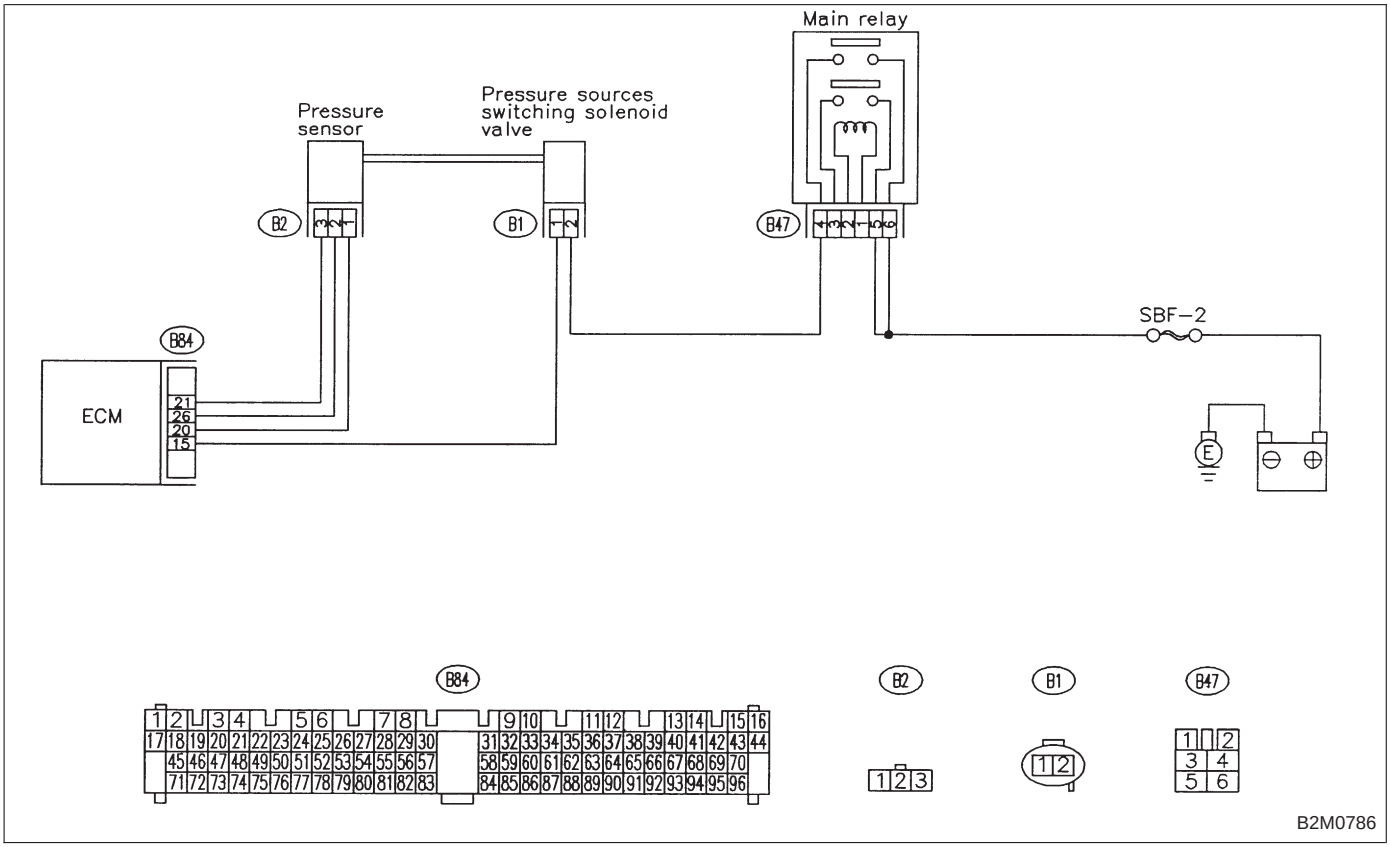

NOTE:
Check pressure sensor circuit.
<Ref. to 2-7 [T10G0].>

OBD (FB1)

P0116 <TW_LOW>

B2M1067

H: DTC P0116 — ENGINE COOLANT TEMPERATURE SENSOR CIRCUIT LOW INPUT —

WIRING DIAGRAM:

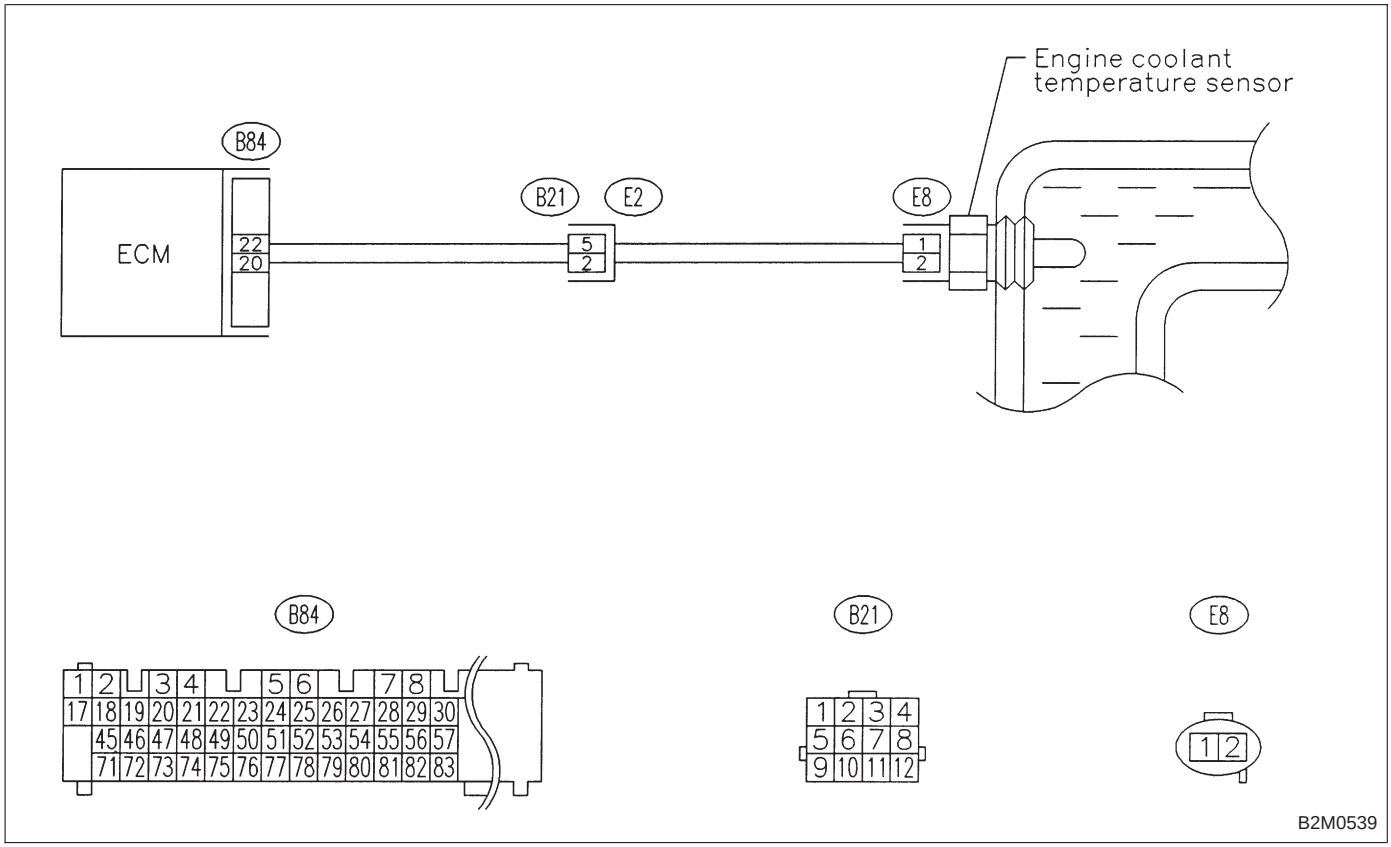

NOTE:
Check engine coolant temperature sensor circuit.
<Ref. to 2-7 [T10H0].>

OBD (FB1)

P0117 <TW_HI>

B2M1068

I: DTC P0117 — ENGINE COOLANT TEMPERATURE SENSOR CIRCUIT HIGH INPUT —

WIRING DIAGRAM:

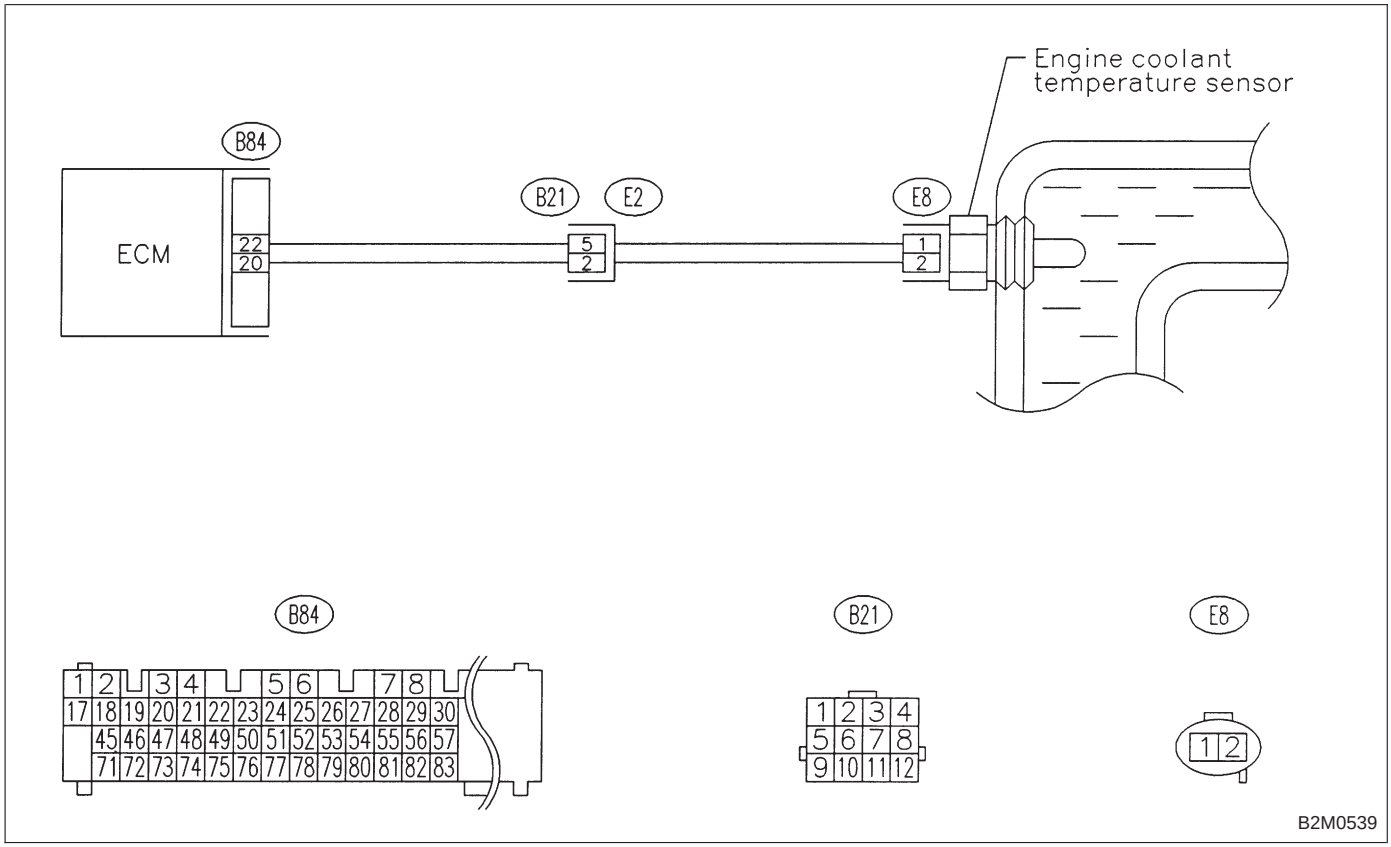

NOTE:
Check engine coolant temperature sensor circuit.
<Ref. to 2-7 [T10I0].>

OBD (FB1)

P0121 <TH_RHI>

B2M1069

J: DTC P0121 — THROTTLE POSITION SENSOR CIRCUIT RANGE/PERFORMANCE PROBLEM (HIGH INPUT) —

WIRING DIAGRAM:

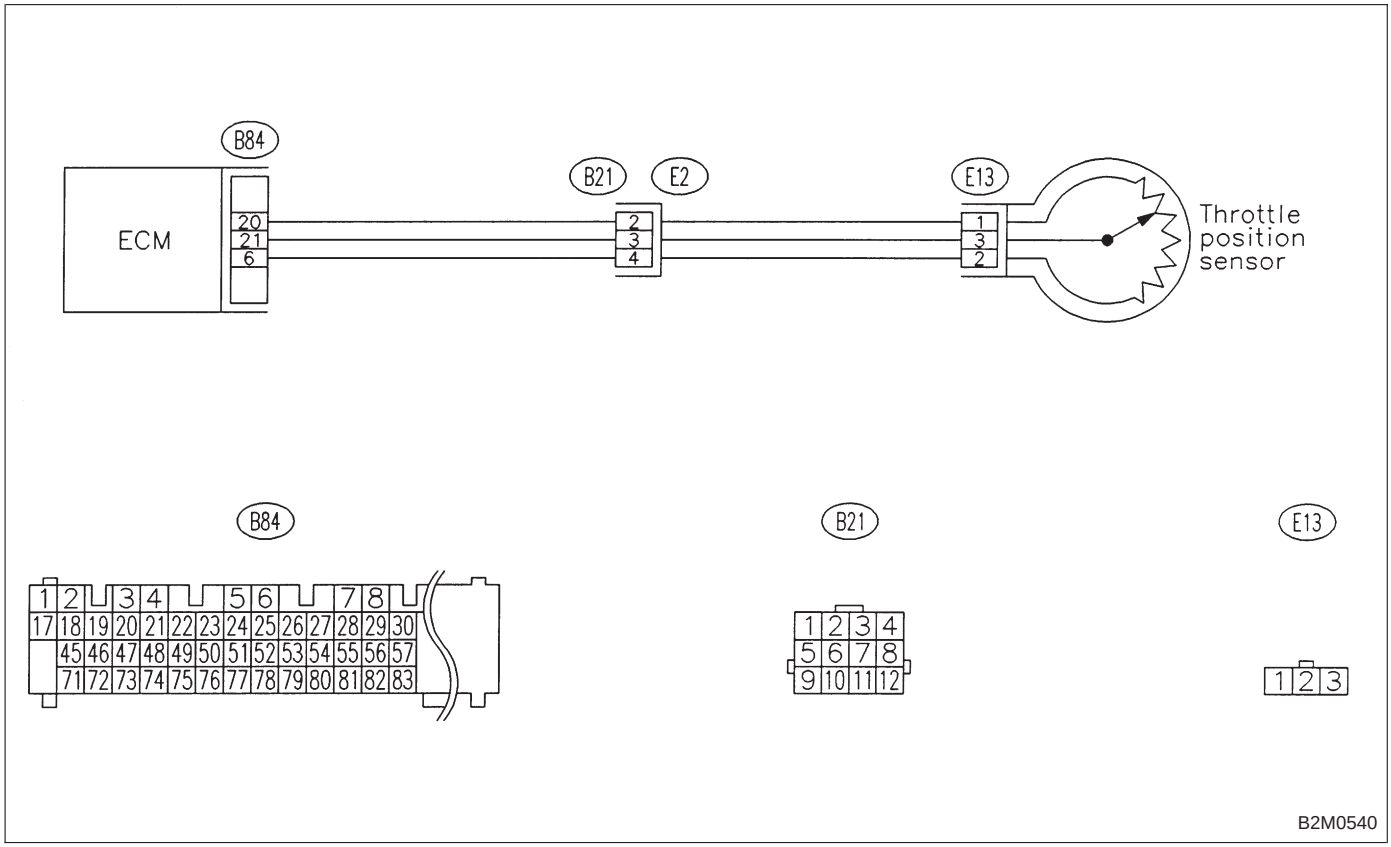

NOTE:
Check throttle position sensor circuit.
<Ref. to 2-7 [T10J0].>

OBD (FB1)

P0122 <THV_LOW>

B2M1070

K: DTC P0122 — THROTTLE POSITION SENSOR CIRCUIT LOW INPUT —

WIRING DIAGRAM:

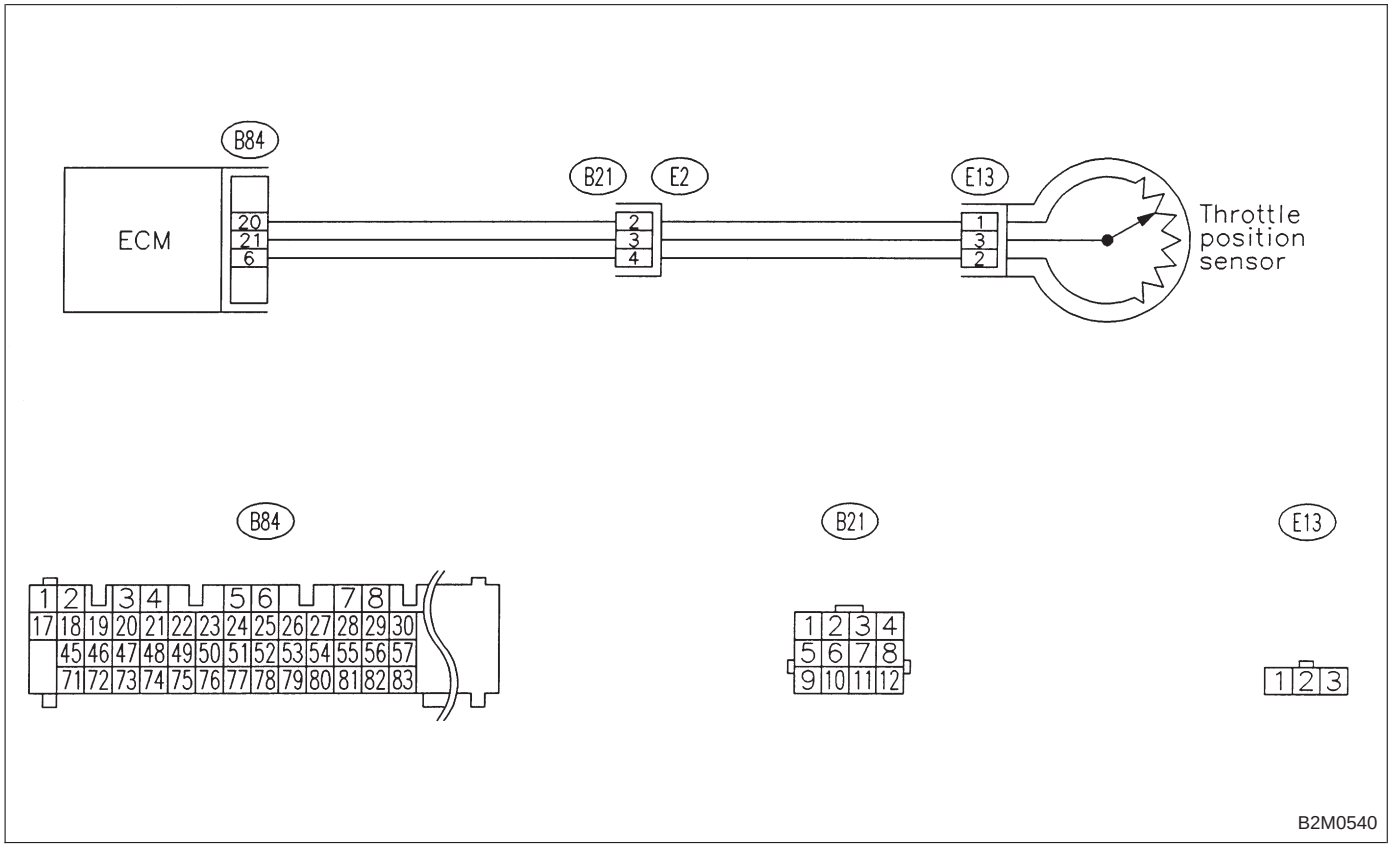

NOTE:
Check throttle position sensor circuit.
<Ref. to 2-7 [T10K0].>

OBD (FB1)

P0123 <THV_HI>

B2M1071

L: DTC P0123 — THROTTLE POSITION SENSOR CIRCUIT HIGH INPUT —

WIRING DIAGRAM:

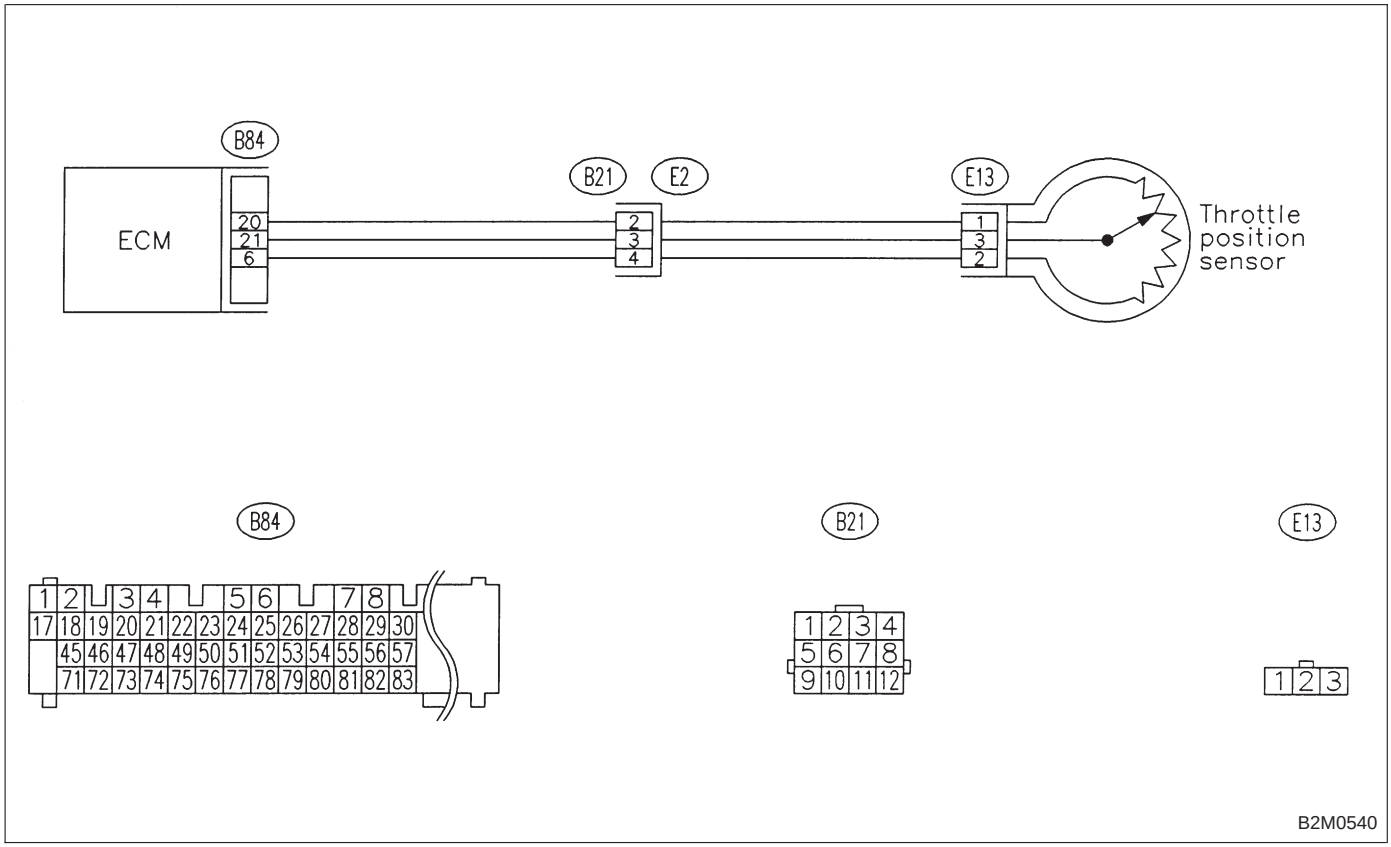

NOTE:
Check throttle position sensor circuit.
<Ref. to 2-7 [T10L0].>

OBD	(FB1)
P0125	<TW_CL>

OBD0191

M: DTC P0125 — INSUFFICIENT COOLANT TEMPERATURE FOR CLOSED LOOP FUEL CONTROL —

WIRING DIAGRAM:

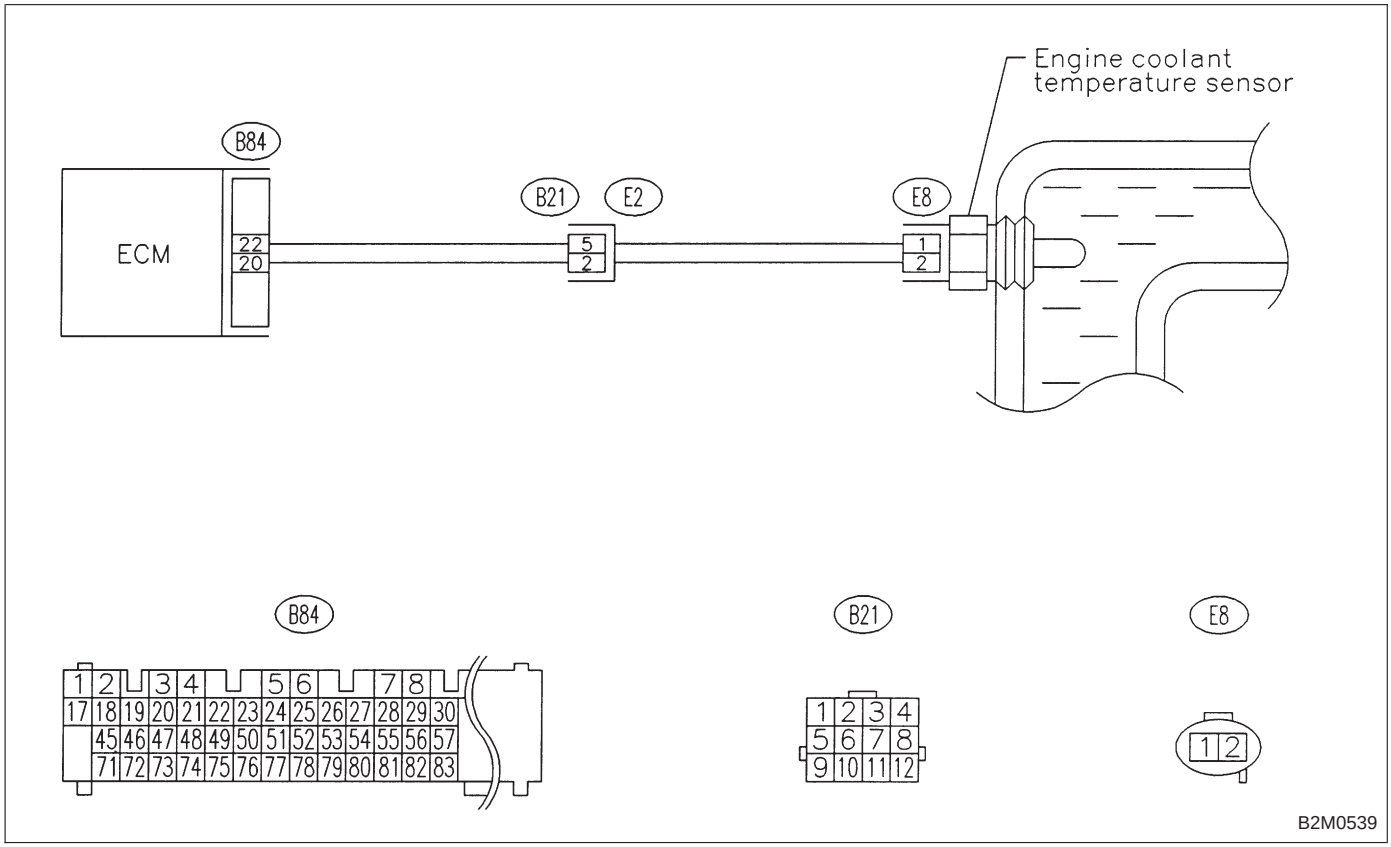

NOTE:
Check insufficient coolant temperature for closed loop fuel control.
<Ref. to 2-7 [T10M0].>

OBD	(FB1)
P0130	<FO2_V>

OBD0199

N: DTC P0130 — FRONT OXYGEN SENSOR CIRCUIT MALFUNCTION —

WIRING DIAGRAM:

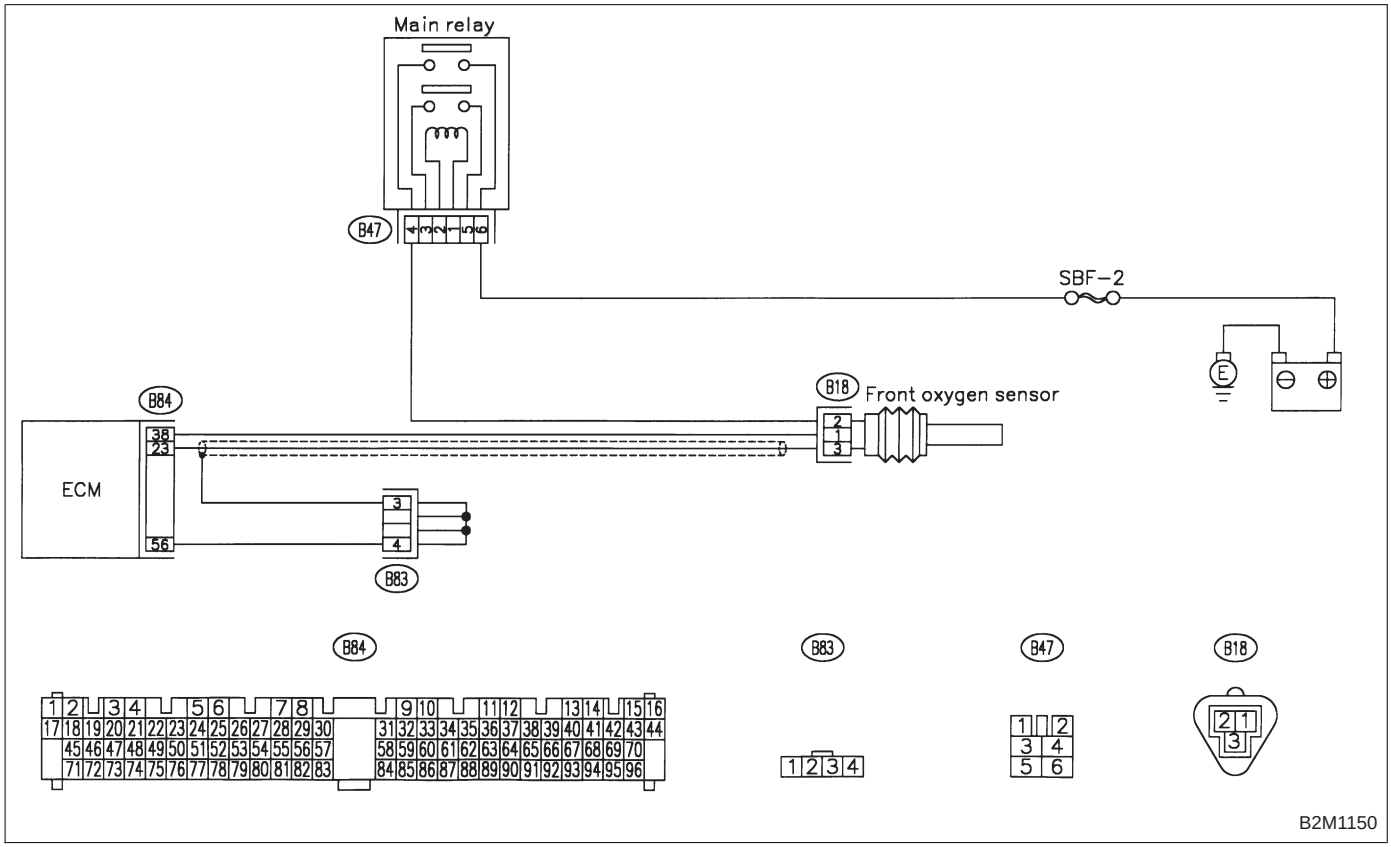

NOTE:
Check front oxygen sensor circuit.
<Ref. to 2-7 [T10N0].>

OBD	(FB1)
P0133	<FO2_R>

OBD0209

O: DTC P0133 — FRONT OXYGEN SENSOR CIRCUIT SLOW RESPONSE —

WIRING DIAGRAM:

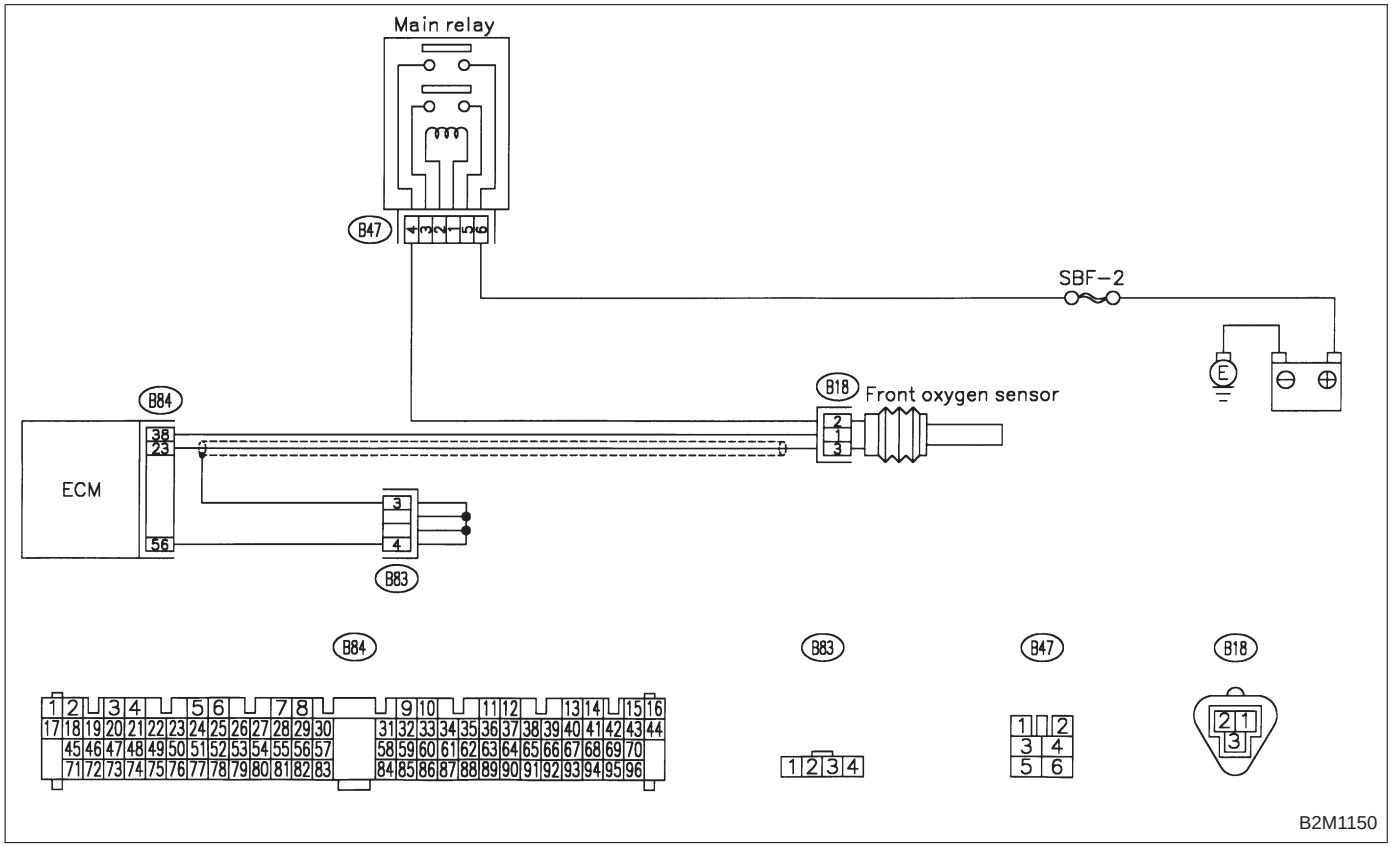

NOTE:
Check front oxygen sensor circuit.
<Ref. to 2-7 [T10O0].>

OBD	(FB1)
P0135	<FO2H>

OBD0212

P: DTC P0135 — FRONT OXYGEN SENSOR HEATER CIRCUIT MALFUNCTION —

WIRING DIAGRAM:

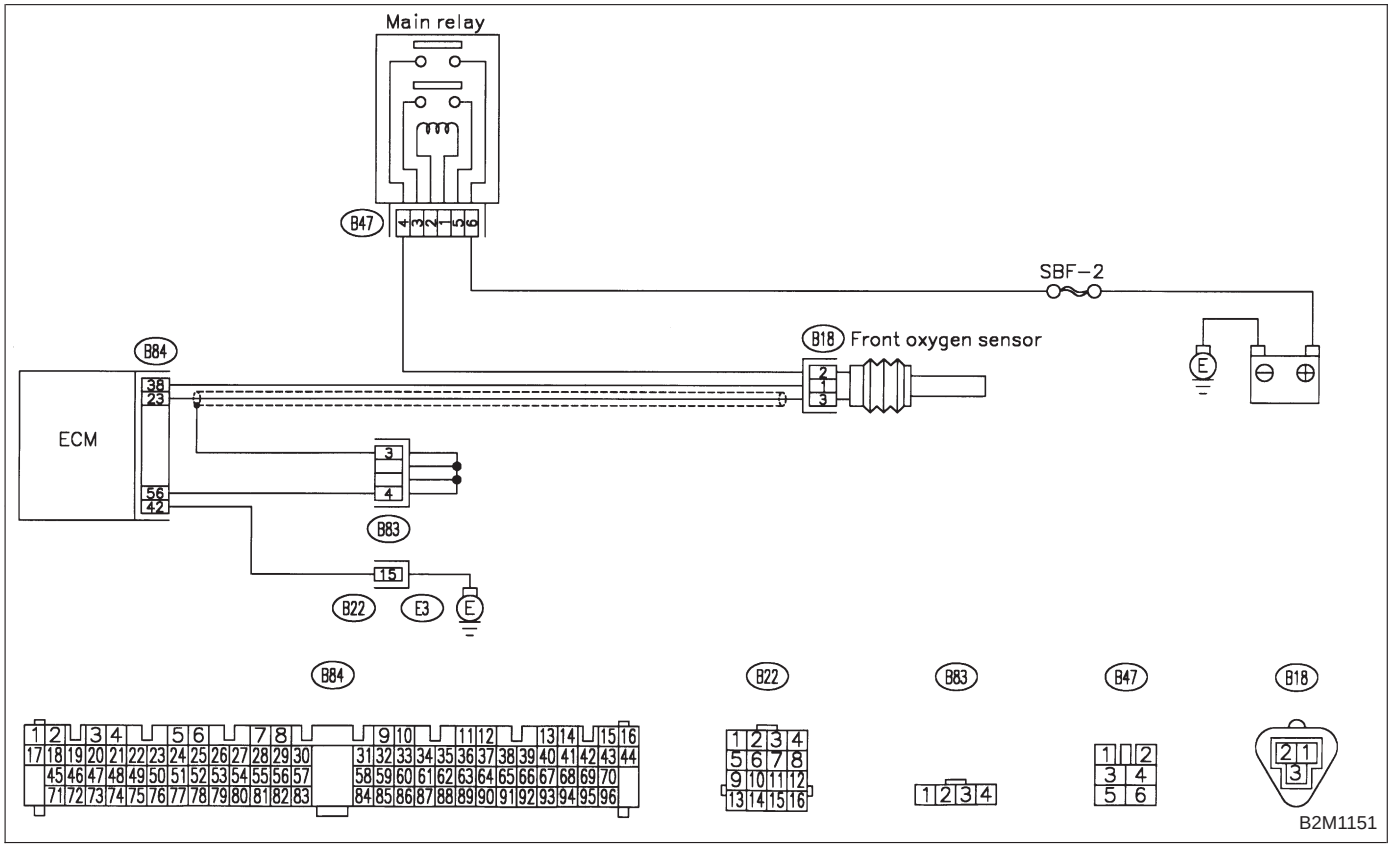

NOTE:
Check front oxygen sensor heater circuit.
<Ref. to 2-7 [T10P0].>

OBD	(FB1)
P0136	<RO2_V>

OBD0220

Q: DTC P0136 — REAR OXYGEN SENSOR CIRCUIT MALFUNCTION —

WIRING DIAGRAM:

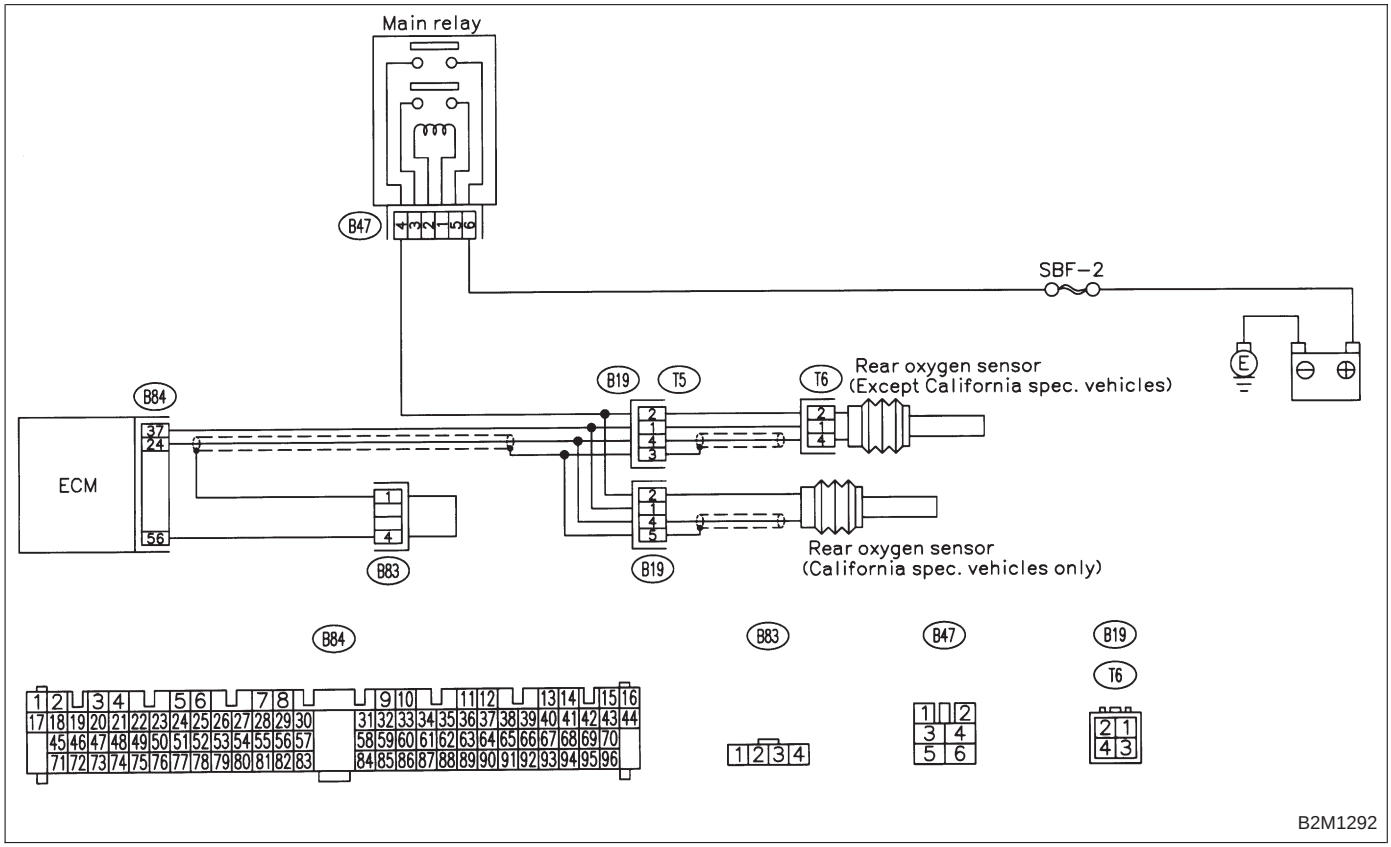

NOTE:
Check rear oxygen sensor circuit.
<Ref. to 2-7 [T10Q0].>

OBD	(FB1)
P0139	<RO2_R>

OBD0229

R: DTC P0139 — REAR OXYGEN SENSOR CIRCUIT SLOW RESPONSE —

WIRING DIAGRAM:

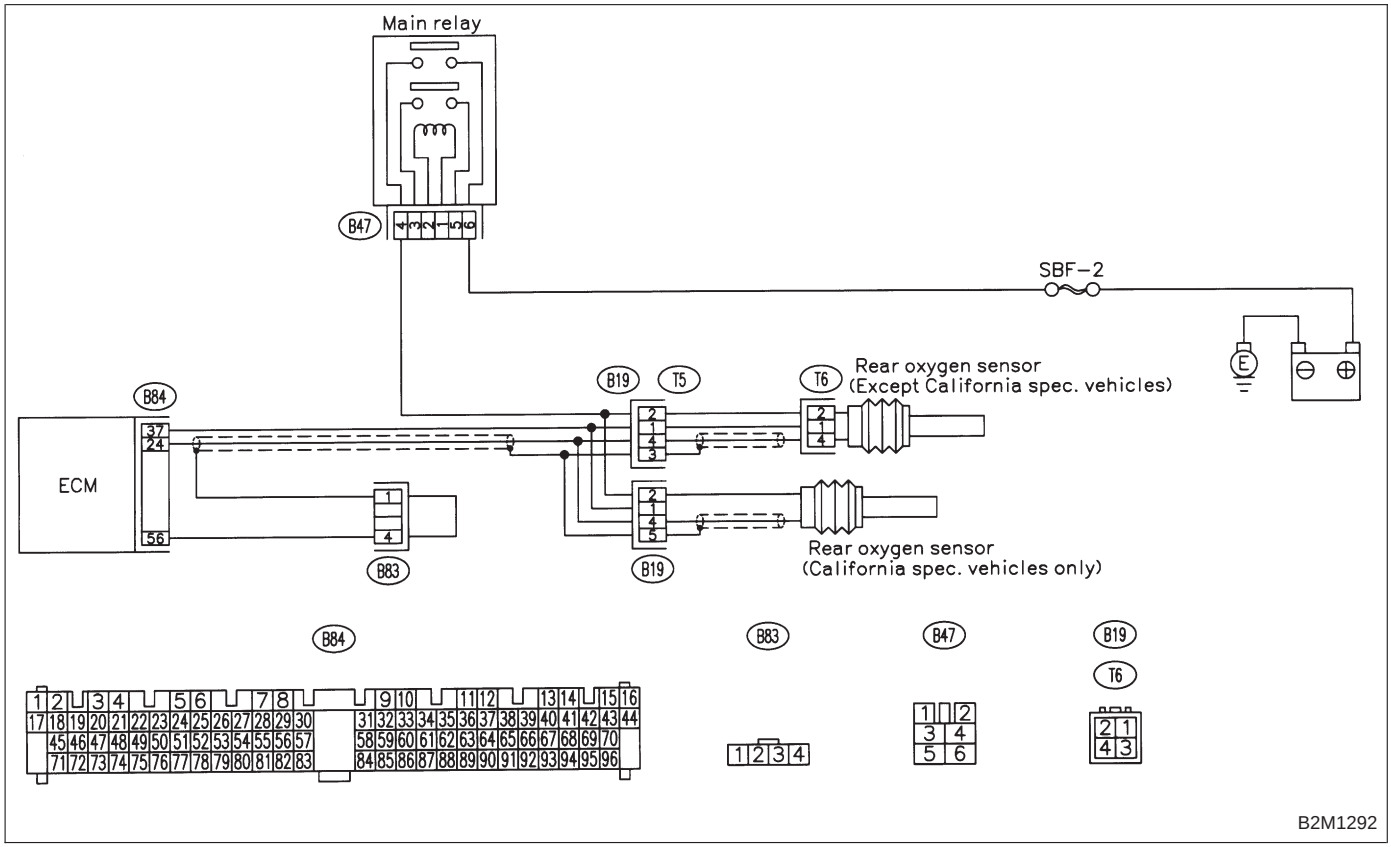

NOTE:
Check rear oxygen sensor circuit.
<Ref. to 2-7 [T10R0].>

OBD	(FB1)
P0141	<RO2H>

OBD0232

S: DTC P0141 — REAR OXYGEN SENSOR HEATER CIRCUIT MALFUNCTION —

WIRING DIAGRAM:

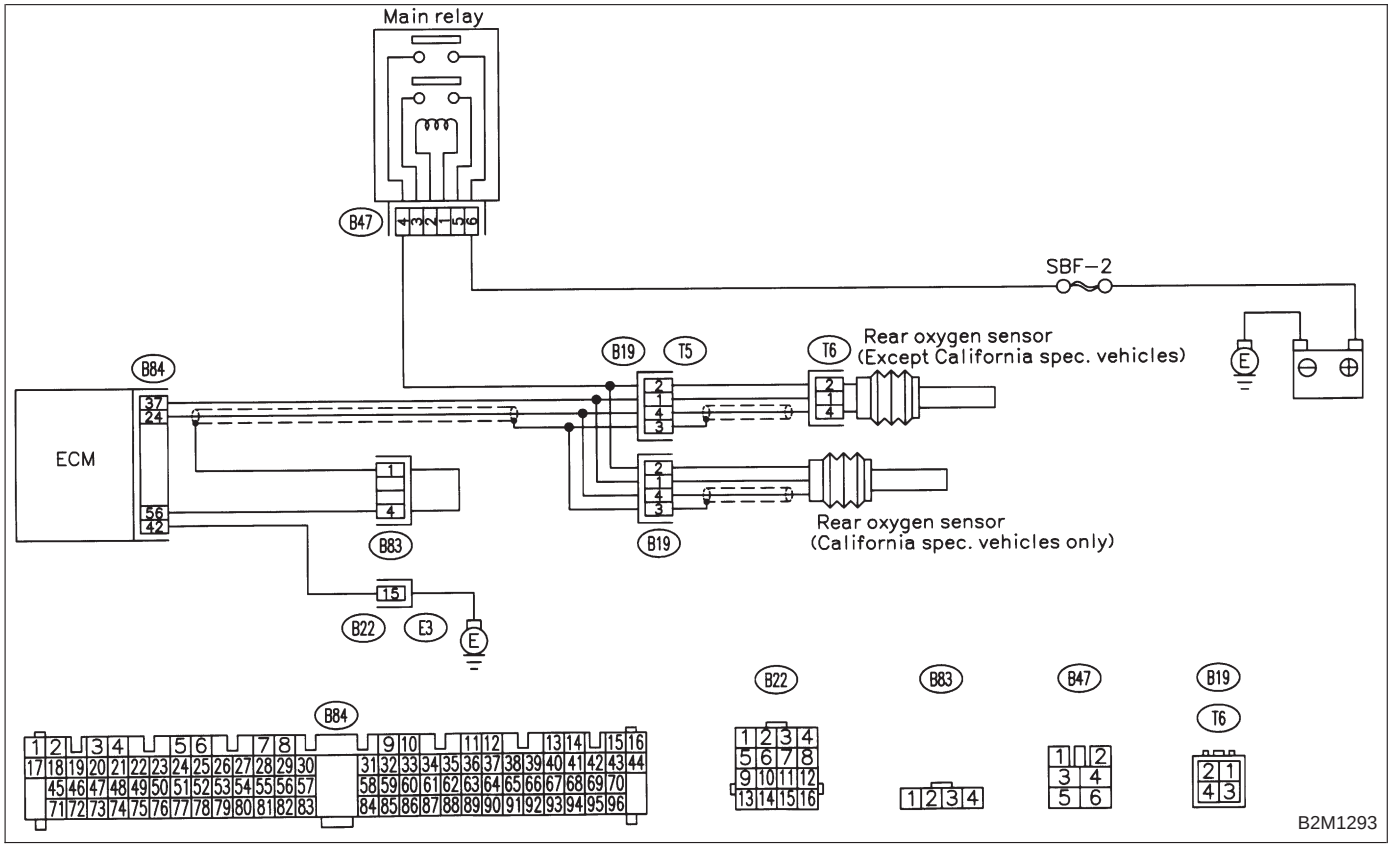

NOTE:
Check rear oxygen sensor heater circuit.
<Ref. to 2-7 [T10S0].>

T: DTC P0170
— FUEL TRIM MALFUNCTION —

NOTE:
Check fuel trim control system.
<Ref. to 2-7 [T10T0].>

OBD (FB1)

P0181 <TNKT_F>

H2M1350

U: DTC P0181 — FUEL TEMPERATURE SENSOR A CIRCUIT RANGE/PERFORMANCE PROBLEM —

DTC DETECTING CONDITION:

- Two consecutive driving cycles with fault

WIRING DIAGRAM:

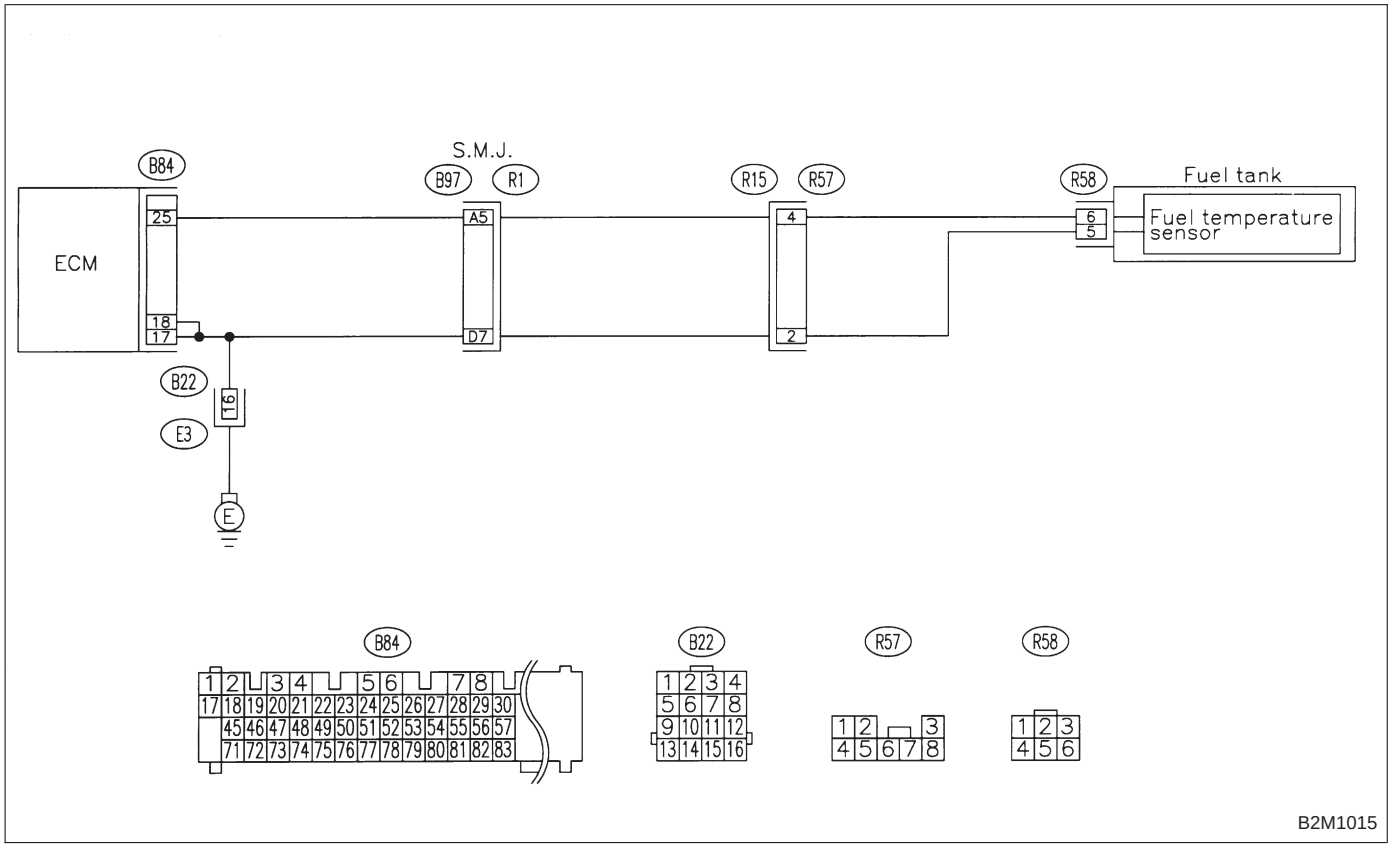

B2M1015

CAUTION:
After repair or replacement of faulty parts, conduct CLEAR MEMORY and INSPECTION MODES.
<Ref. to 2-7 [T3D0] and [T3E0].>

11U1	**CHECK DTC P0182 OR P0183 ON DISPLAY.**

CHECK : ***Does the Subaru select monitor or OBD-II general scan tool indicate DTC P0182 or P0183?***

YES : Inspect DTC P0182 or P0183 using “11. Diagnostics Chart with Trouble Code”. <Ref. to 2-7 [T11A0].>

NOTE:
In this case, it is not necessary to inspect DTC P0181.

NO : Replace fuel temperature sensor.

OBD (FB1)

P0182 <TNKT_LOW>

B2M1079

V: DTC P0182 — FUEL TEMPERATURE SENSOR A CIRCUIT LOW INPUT —

DTC DETECTING CONDITION:

- Immediately at fault recognition

WIRING DIAGRAM:

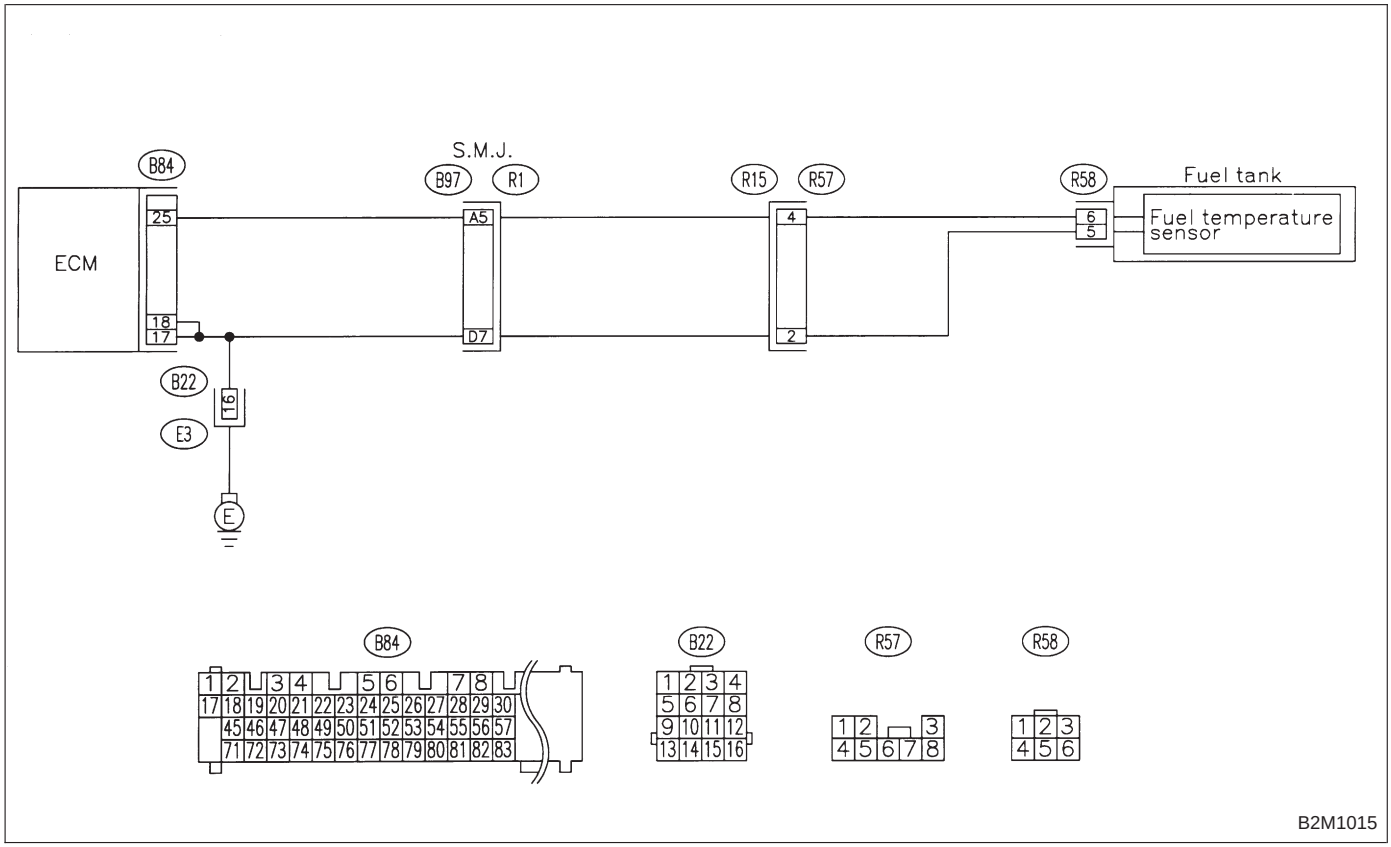

B2M1015

CAUTION:
After repair or replacement of faulty parts, conduct CLEAR MEMORY and INSPECTION MODES.
<Ref. to 2-7 [T3D0] and [T3E0].>

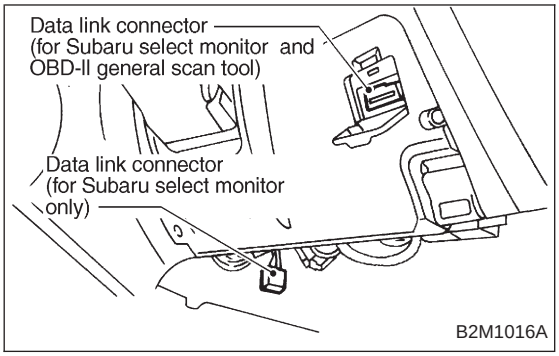

11V1	CONNECT SUBARU SELECT MONITOR OR THE OBD-II GENERAL SCAN TOOL, AND READ DATA.

1) Turn ignition switch to OFF.
2) Connect Subaru Select Monitor or the OBD-II general scan tool to data link connector.
3) Turn ignition switch to ON and Subaru Select Monitor or OBD-II general scan tool switch to ON.
4) Start engine.

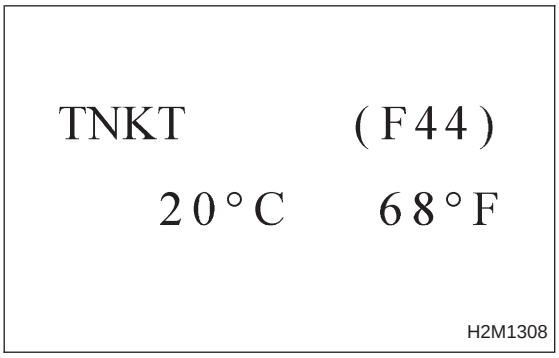

5) Read data on Subaru Select Monitor or OBD-II general scan tool.

● Subaru Select Monitor
Designate mode using function key.

Function mode: F44

● F44: Fuel temperature is indicated in "°C" and "°F".

CHECK ***: Is the value greater than 150°C or 300°F in function mode F44?***

YES : Go to step **11V2**.

NO : Even if MIL lights up, the circuit has returned to a normal condition at this time.

● OBD-II general scan tool
For detailed operation procedures, refer to the OBD-II General Scan Tool Instruction Manual.

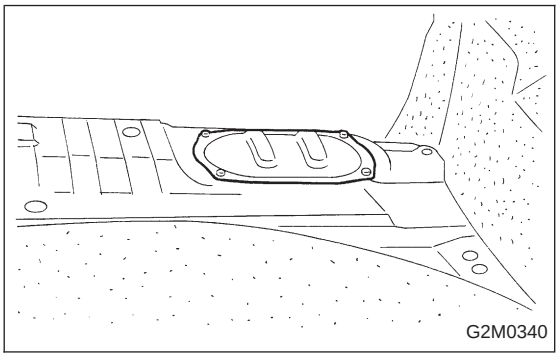

11V2	CHECK HARNESS BETWEEN FUEL TEMPERATURE SENSOR AND ECM CONNECTOR.

1) Turn ignition switch to OFF.
2) Remove access hole lid.
3) Disconnect connector from fuel pump.

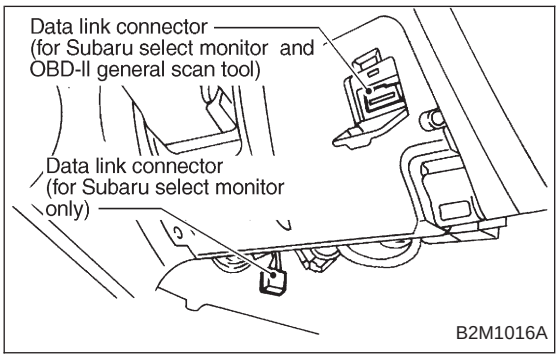

4) Connect Subaru Select Monitor or the OBD-II general scan tool to data link connector.

5) Turn ignition switch and Subaru Select Monitor or OBD-II general scan tool switch to ON.

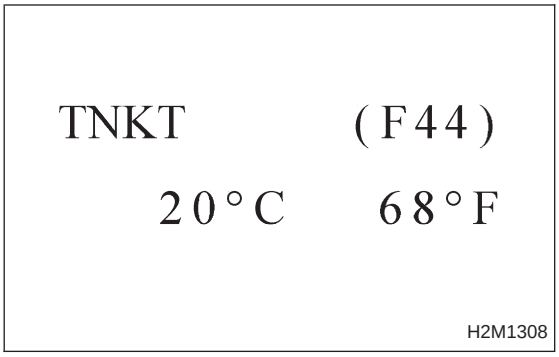

6) Read data on Subaru Select Monitor or the OBD-II general scan tool.

● Subaru Select Monitor
Designate mode using function key.

Function mode: F44

● F44: Fuel temperature is indicated in "°C" and "°F".

CHECK ***: Is the value less than −40°C or −40°F in function mode F44?***

YES : Replace fuel temperature sensor.

NO : Repair ground short circuit in harness between fuel pump and ECM connector.

● OBD-II general scan tool
For detailed operation procedures, refer to the OBD-II General Scan Tool Instruction Manual.

OBD (FB1)

P0183 <TNKT_HI>

B2M1080

W: DTC P0183 — FUEL TEMPERATURE SENSOR A CIRCUIT HIGH INPUT —

DTC DETECTING CONDITION:

- Immediately at fault recognition

WIRING DIAGRAM:

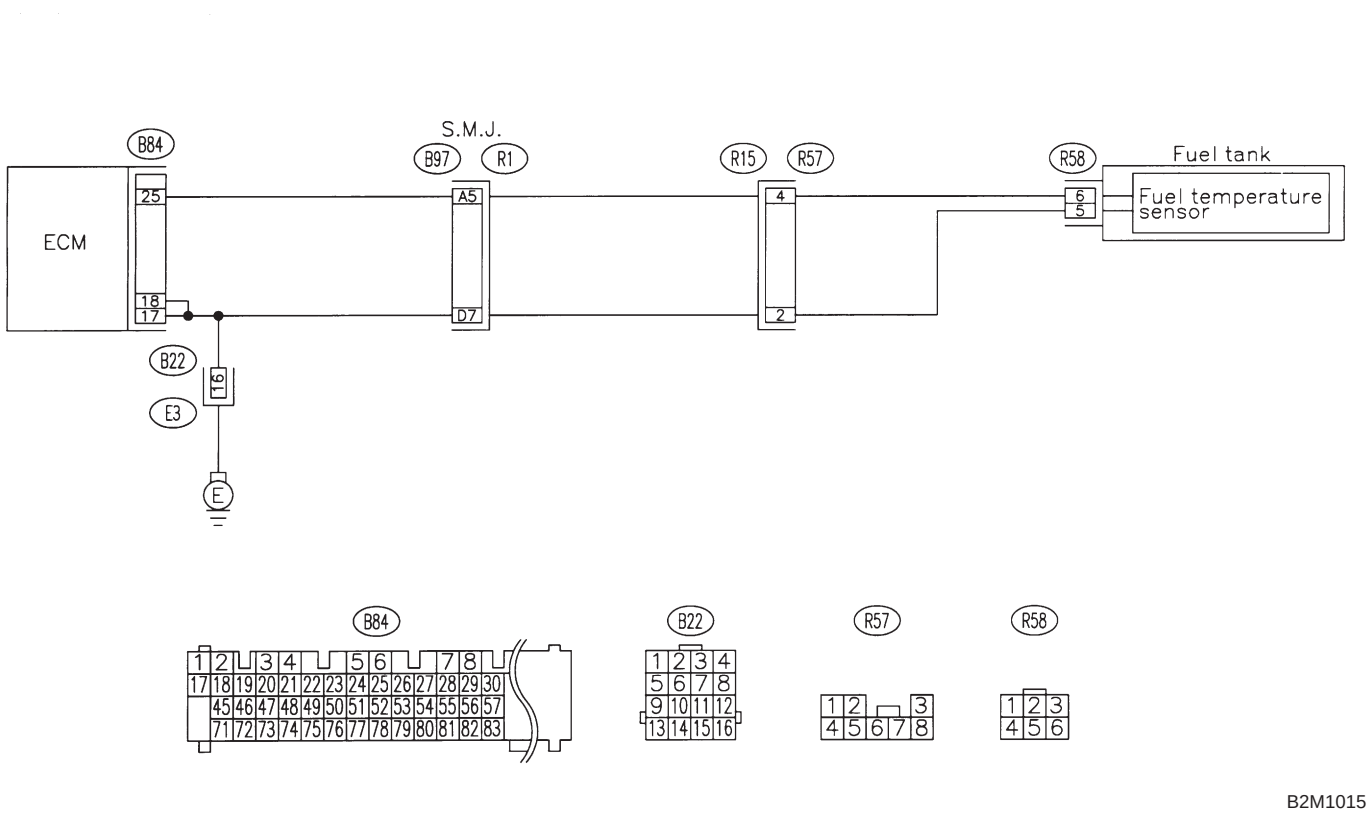

B2M1015

CAUTION:
After repair or replacement of faulty parts, conduct CLEAR MEMORY and INSPECTION MODES.
<Ref. to 2-7 [T3D0] and [T3E0].>

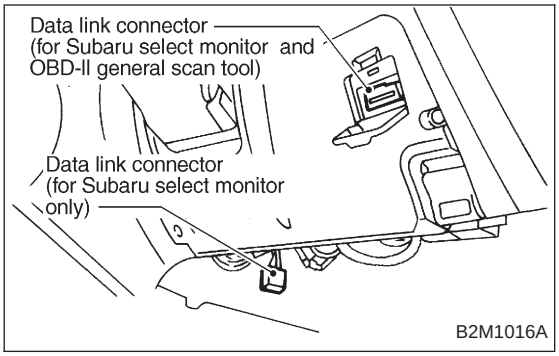

11W1	CONNECT SUBARU SELECT MONITOR OR THE OBD-II GENERAL SCAN TOOL, AND READ DATA.

1) Turn ignition switch to OFF.
2) Connect Subaru Select Monitor or the OBD-II general scan tool to data link connector.
3) Turn ignition switch to ON and Subaru Select Monitor or OBD-II general scan tool switch to ON.
4) Start engine.

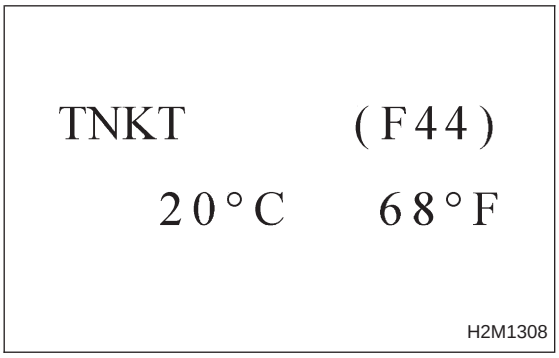

5) Read data on Subaru Select Monitor or OBD-II general scan tool.

- Subaru Select Monitor

Designate mode using function key.

Function mode: F44

- F44: Fuel temperature is indicated in "°C" and "°F".

CHECK : ***Is the value less than −40°C or −40°F in function mode F44?***

YES : Go to step **11W2**.

NO : Repair poor contact.

NOTE:
In this case, repair the following:
- Poor contact in fuel pump connector
- Poor contact in ECM connector
- Poor contact in coupling connector (B22, B97 and R57)
- OBD-II general scan tool

For detailed operation procedures, refer to the OBD-II General Scan Tool Instruction Manual.

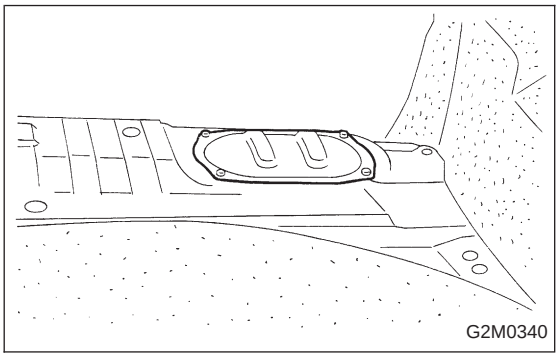

11W2	CHECK HARNESS BETWEEN FUEL TEMPERATURE SENSOR AND ECM CONNECTOR.

1) Turn ignition switch to OFF.
2) Remove access hole lid.
3) Disconnect connector from fuel pump.

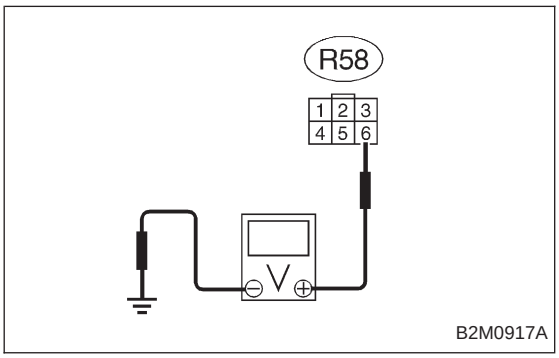

4) Measure voltage between fuel pump connector and chassis ground.

CHECK : ***Connector & terminal (R58) No. 6 (+) — Chassis ground (−): Is the voltage more than 10 V?***

YES : Repair battery short circuit in harness between ECM and fuel pump connector.

NO : Go to next step 5).

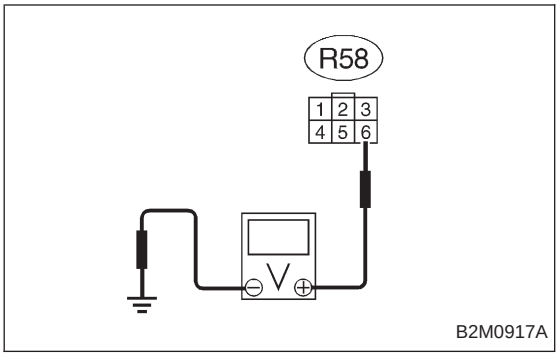

5) Turn ignition switch to ON.
6) Measure voltage between fuel pump connector and chassis ground.

CHECK : ***Connector & terminal (R58) No. 6 (+) — Chassis ground (−): Is the voltage more than 10 V?***

YES : Repair battery short circuit in harness between ECM and fuel pump connector.

NO : Go to step **11W3**.

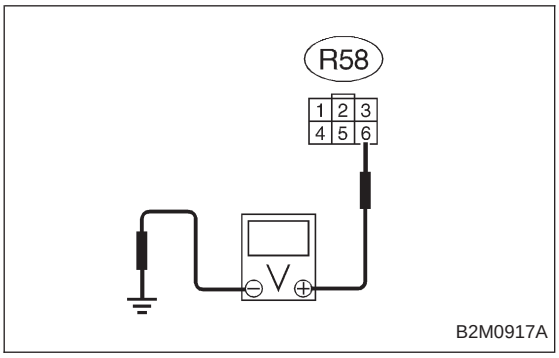

11W3	CHECK HARNESS BETWEEN FUEL TEMPERATURE SENSOR AND ECM CONNECTOR.

1) Measure voltage between fuel pump connector and chassis ground.

CHECK : ***Connector & terminal (R58) No. 6 (+) — Chassis ground (−): Is the voltage more than 4 V?***

YES : Go to next step 2).

NO : Repair harness and connector.

NOTE:
In this case, repair the following:
- Open circuit in harness between ECM and fuel pump connector
- Poor contact in fuel pump connector
- Poor contact in ECM connector
- Poor contact in coupling connectors (B97 and R57)

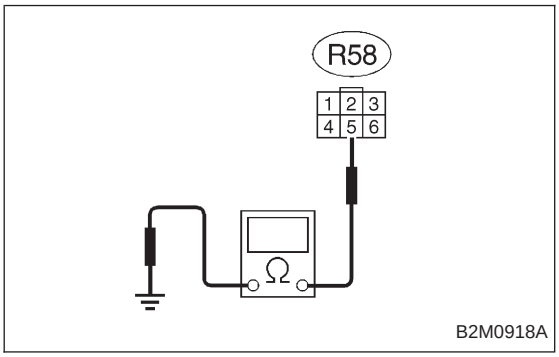

2) Turn ignition switch to OFF.
3) Measure resistance of harness between fuel pump connector and chassis ground.

CHECK : ***Connector & terminal (R58) No. 5 — Chassis ground: Is the resistance less than 5 Ω?***

YES : Replace fuel temperature sensor.

NO : Repair harness and connector.

NOTE:
In this case, repair the following:
- Open circuit in harness between ECM and fuel pump connector
- Poor contact in fuel pump connector
- Poor contact in ECM connector
- Poor contact in coupling connectors (B22, B97 and R57)

OBD (FB1)
P0261 <INJ 1>
B2M1081

X: DTC P0261
— FUEL INJECTOR CIRCUIT LOW INPUT - #1 —

OBD (FB1)
P0264 <INJ 2>
B2M1082

Y: DTC P0264
— FUEL INJECTOR CIRCUIT LOW INPUT - #2 —

OBD (FB1)
P0267 <INJ 3>
B2M1083

Z: DTC P0267
— FUEL INJECTOR CIRCUIT LOW INPUT - #3 —

OBD (FB1)
P0270 <INJ 4>
B2M1084

AA: DTC P0270
— FUEL INJECTOR CIRCUIT LOW INPUT - #4 —

WIRING DIAGRAM:

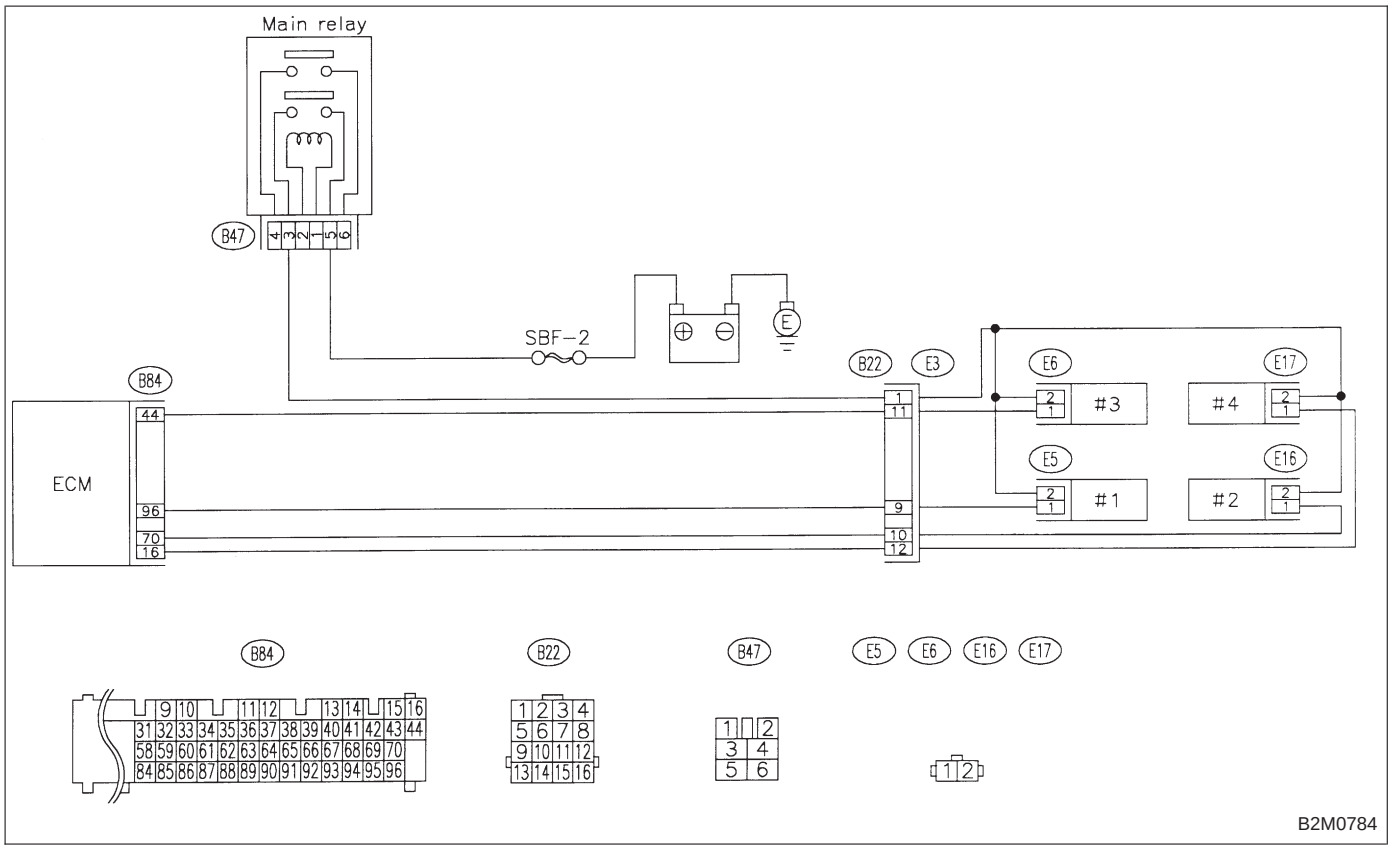

NOTE:
Check fuel injector circuit.
<Ref. to 2-7 [T10X0].>

OBD (FB1)
P0262 <INJ1_HI>
B2M1085

AB: DTC P0262
— FUEL INJECTOR CIRCUIT HIGH INPUT - #1 —

OBD (FB1)
P0265 <INJ2_HI>
B2M1086

AC: DTC P0265
— FUEL INJECTOR CIRCUIT HIGH INPUT - #2 —

OBD (FB1)
P0268 <INJ3_HI>
B2M1087

AD: DTC P0268
— FUEL INJECTOR CIRCUIT HIGH INPUT - #3 —

OBD (FB1)
P0271 <INJ4_HI>
B2M1088

AE: DTC P0271
— FUEL INJECTOR CIRCUIT HIGH INPUT - #4 —

WIRING DIAGRAM:

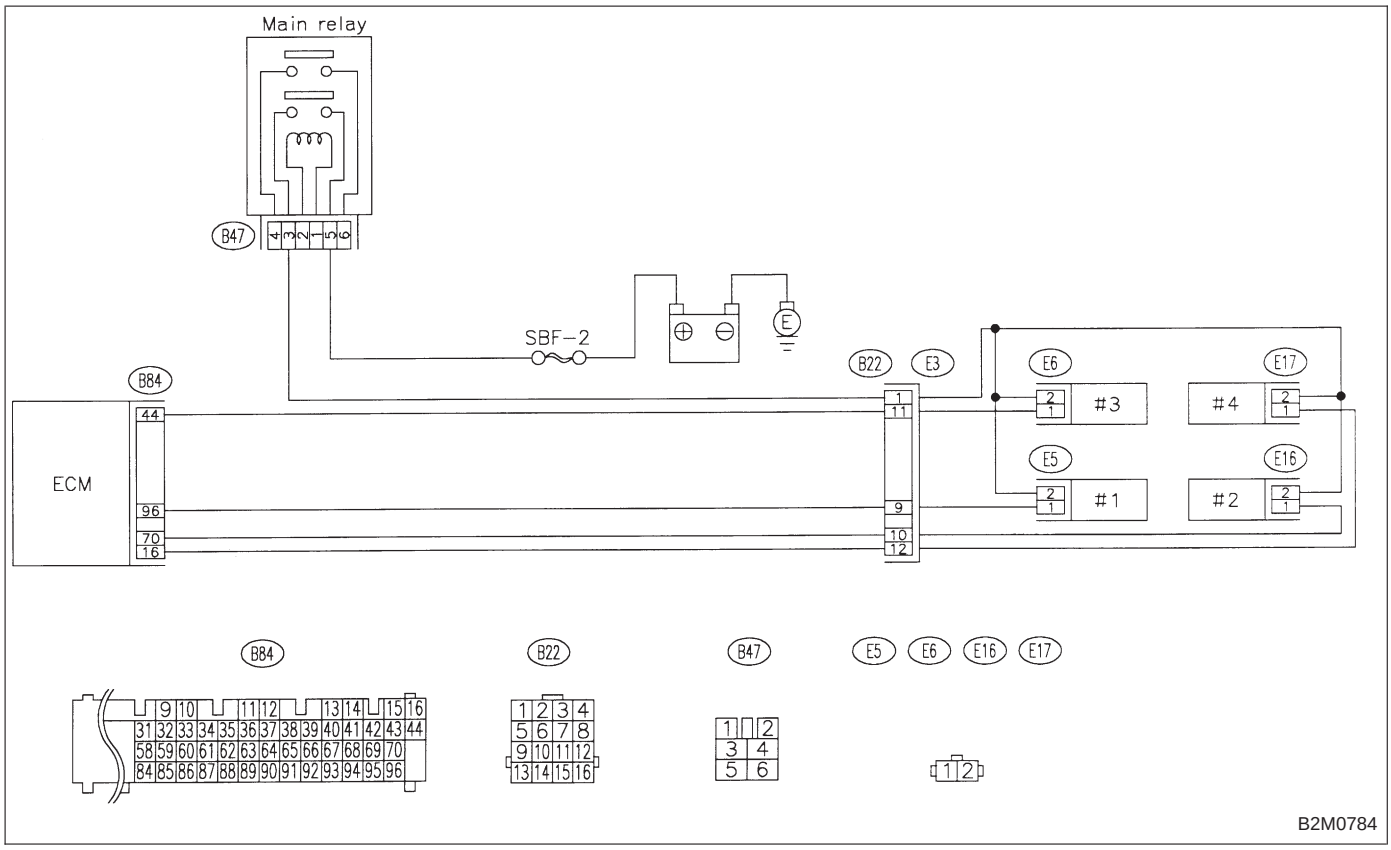

NOTE:
Check fuel injector circuit.
<Ref. to 2-7 [T10AB0].>

OBD (FB1)

P0301 <MIS_1>

OBD0277

AF: DTC P0301
— CYLINDER 1 MISFIRE DETECTED —

OBD (FB1)

P0302 <MIS_2>

OBD0278

AG: DTC P0302
— CYLINDER 2 MISFIRE DETECTED —

OBD (FB1)

P0303 <MIS_3>

OBD0279

AH: DTC P0303
— CYLINDER 3 MISFIRE DETECTED —

OBD (FB1)

P0304 <MIS_4>

OBD0280

AI: DTC P0304
— CYLINDER 4 MISFIRE DETECTED —

WIRING DIAGRAM:

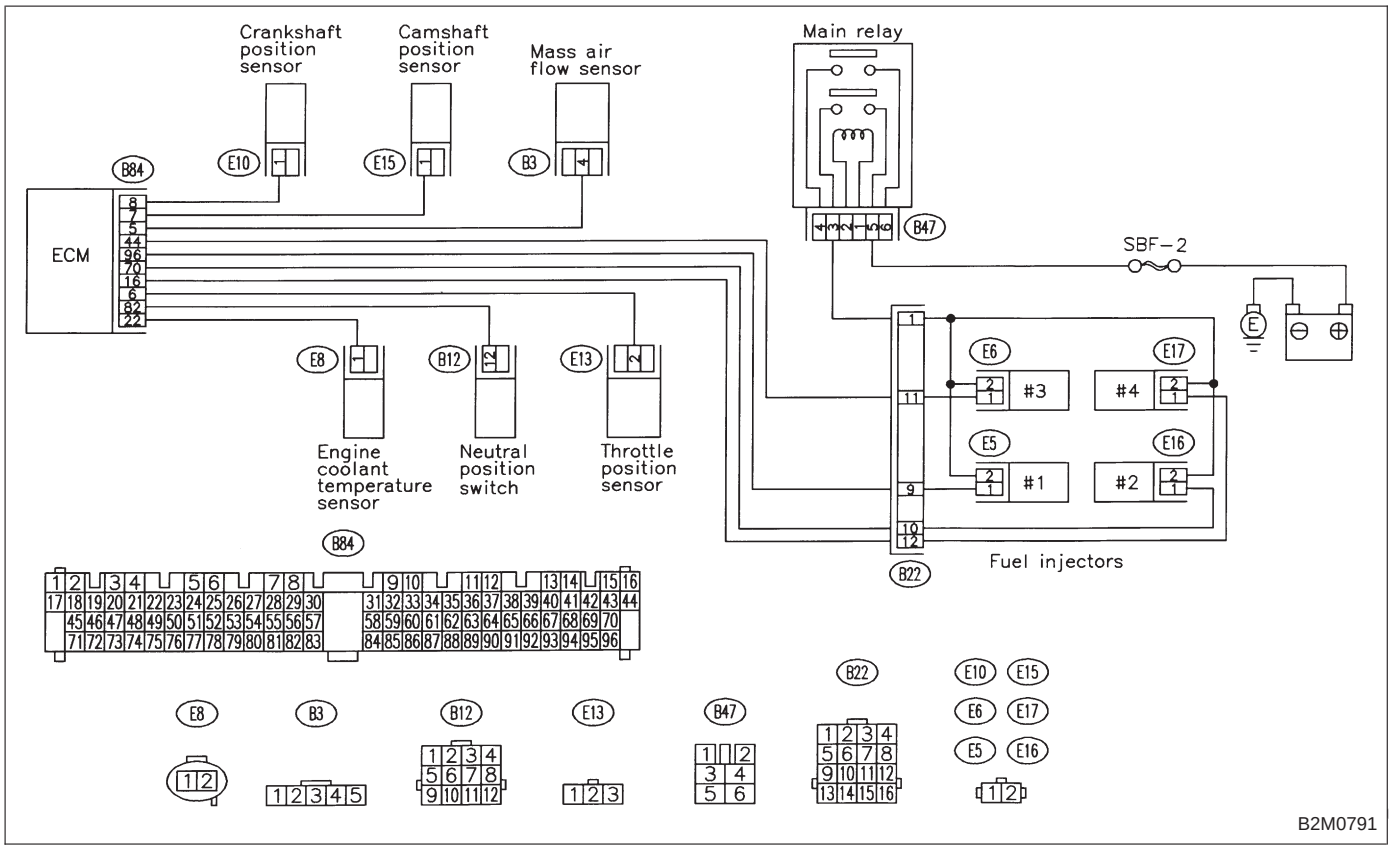

NOTE:
Check fuel injection control system.
<Ref. to 2-7 [T10AF0].>

OBD (FB1)

P0325 <KNOCK>

OBD0283

AJ: DTC P0325 — KNOCK SENSOR CIRCUIT MALFUNCTION —

WIRING DIAGRAM:

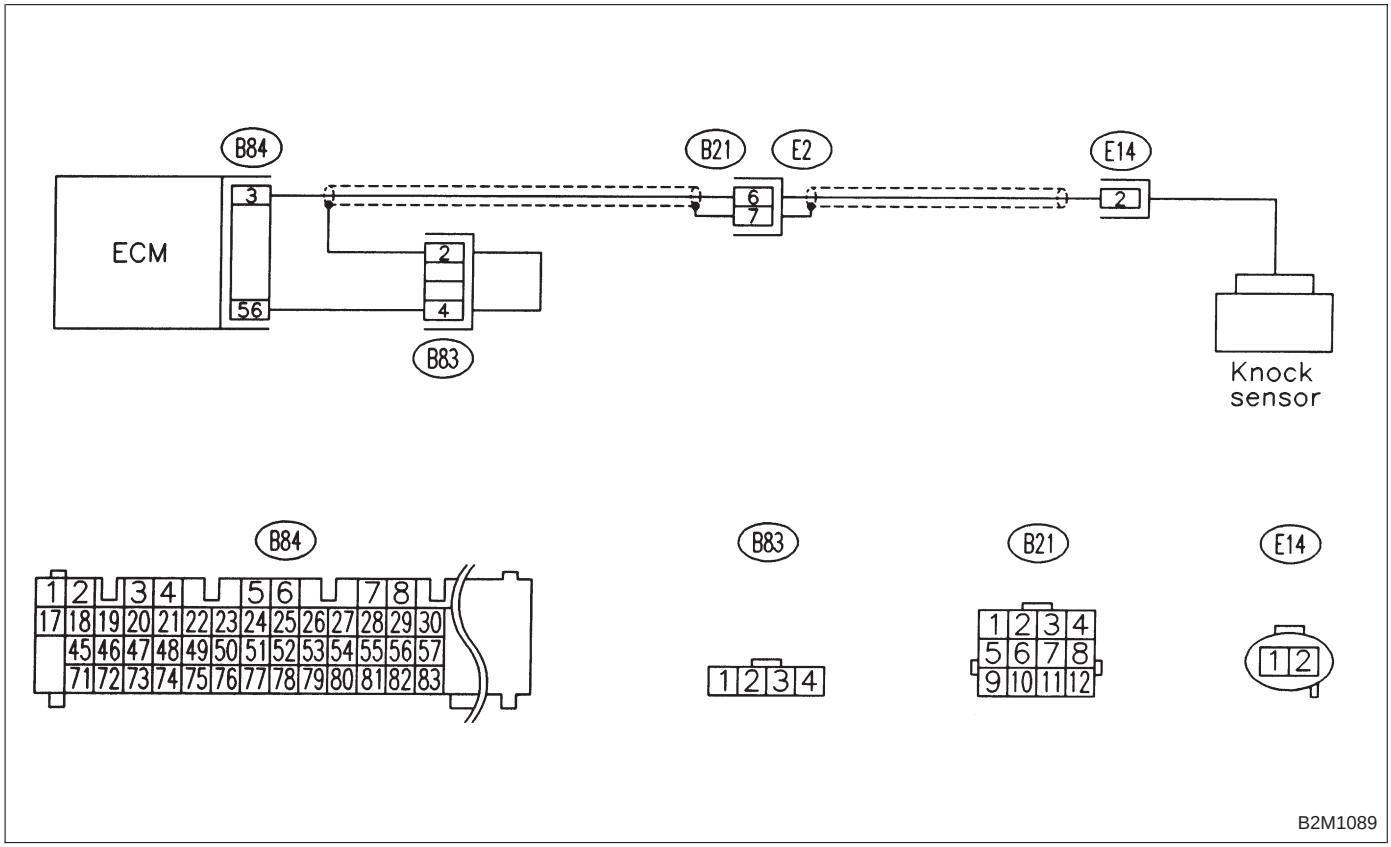

NOTE:
Check knock sensor circuit.
<Ref. to 2-7 [T10AJ0].>

OBD	(FB1)
P0335	<CRANK>

OBD0292

AK: DTC P0335 — CRANKSHAFT POSITION SENSOR CIRCUIT MALFUNCTION —

WIRING DIAGRAM:

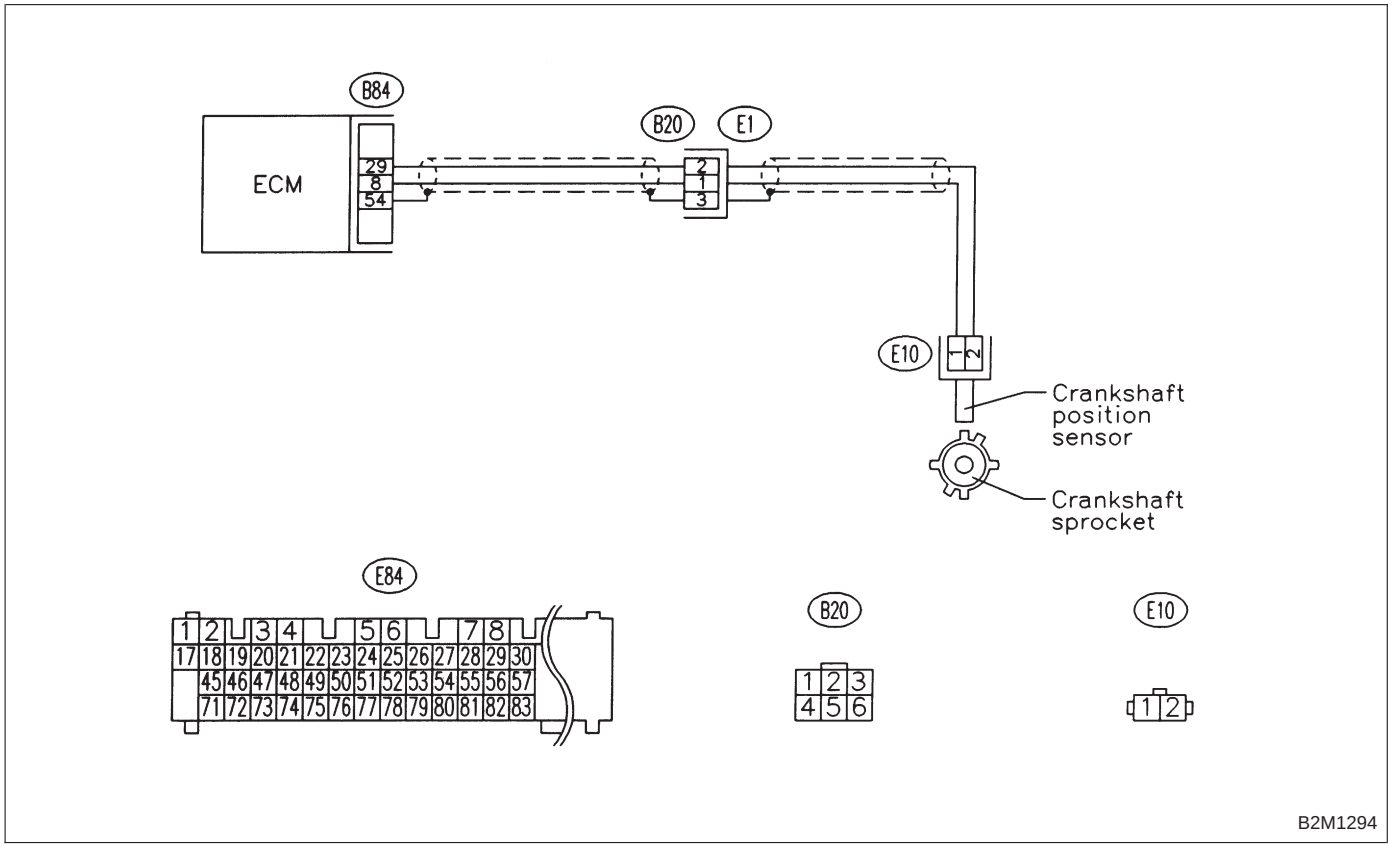

NOTE:
Check crankshaft position sensor circuit.
<Ref. to 2-7 [T10AK0].>

OBD (FB1)

P0336 <CRANK_R>

B2M1091

AL: DTC P0336 — CRANKSHAFT POSITION SENSOR CIRCUIT RANGE/PERFORMANCE PROBLEM —

WIRING DIAGRAM:

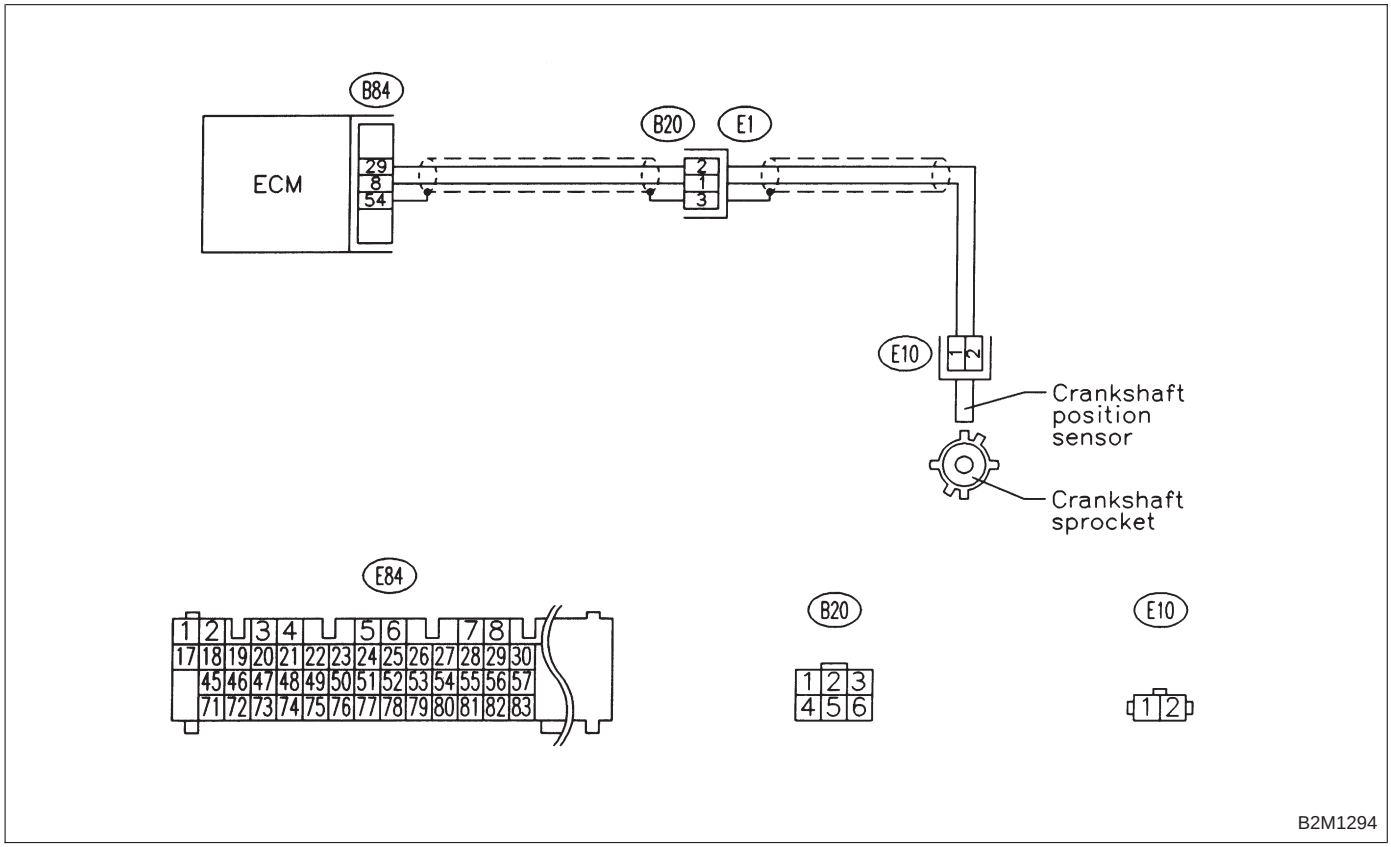

NOTE:
Check crankshaft position sensor circuit.
<Ref. to 2-7 [T10AL0].>

OBD	(FB1)
P0340	<CAM>

OBD0304

AM: DTC P0340 — CAMSHAFT POSITION SENSOR CIRCUIT MALFUNCTION —

WIRING DIAGRAM:

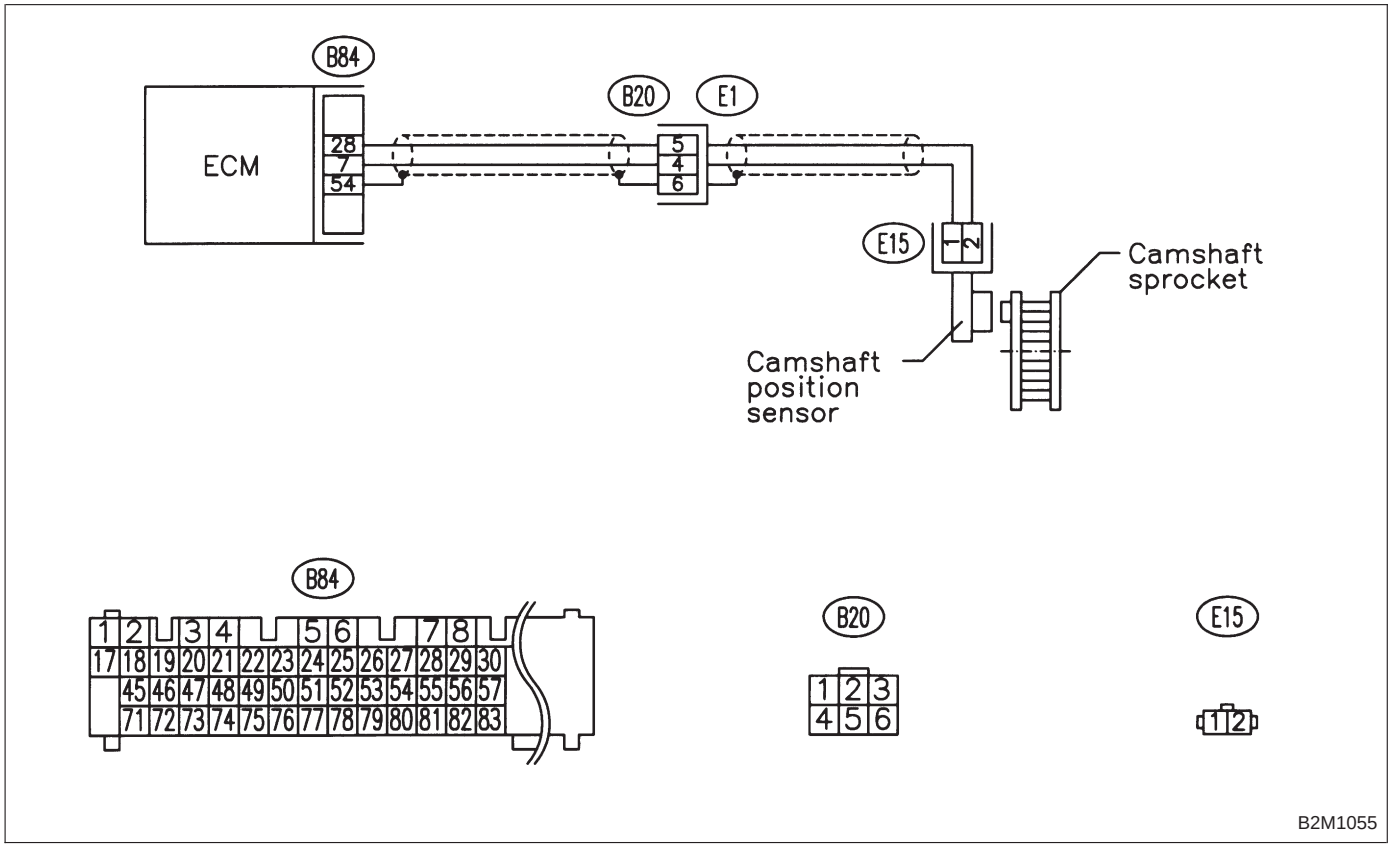

NOTE:
Check camshaft position sensor circuit.
<Ref. to 2-7 [T10AM0].>

OBD (FB1)

P0341 <CAM_R>

B2M1092

AN: DTC P0341 — CAMSHAFT POSITION SENSOR CIRCUIT RANGE/PERFORMANCE PROBLEM —

WIRING DIAGRAM:

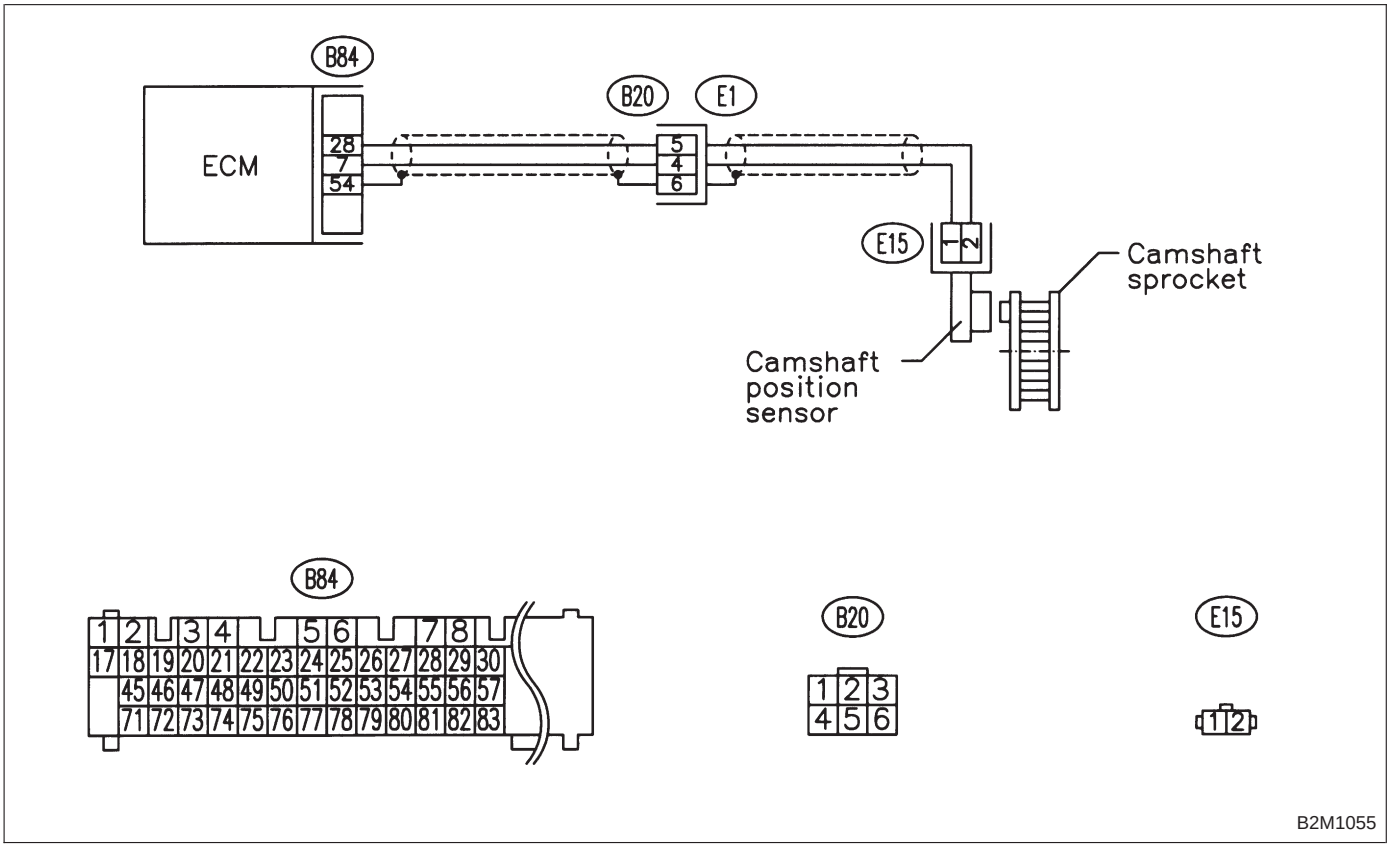

NOTE:
Check camshaft position sensor circuit.
<Ref. to 2-7 [T10AN0].>

OBD	(FB1)
P0400	<EGR>

OBD0315

AO: DTC P0400 — EXHAUST GAS RECIRCULATION FLOW MALFUNCTION —

WIRING DIAGRAM:

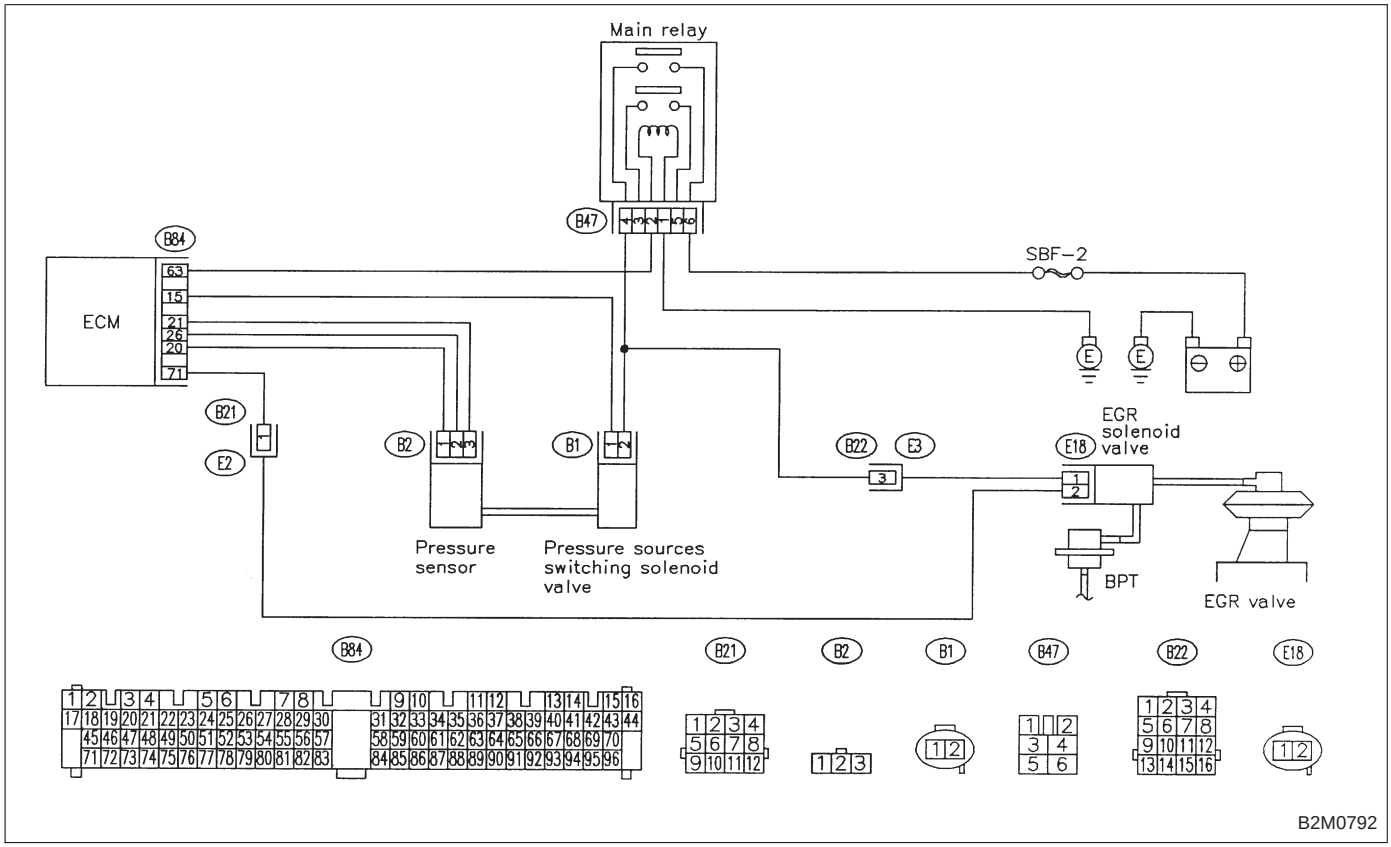

NOTE:
Check exhaust gas recirculation control system.
<Ref. to 2-7 [T10AO0].>

OBD	(FB1)
P0403	<EGRSOL>

OBD0323

AP: DTC P0403 — EXHAUST GAS RECIRCULATION CIRCUIT LOW INPUT —

WIRING DIAGRAM:

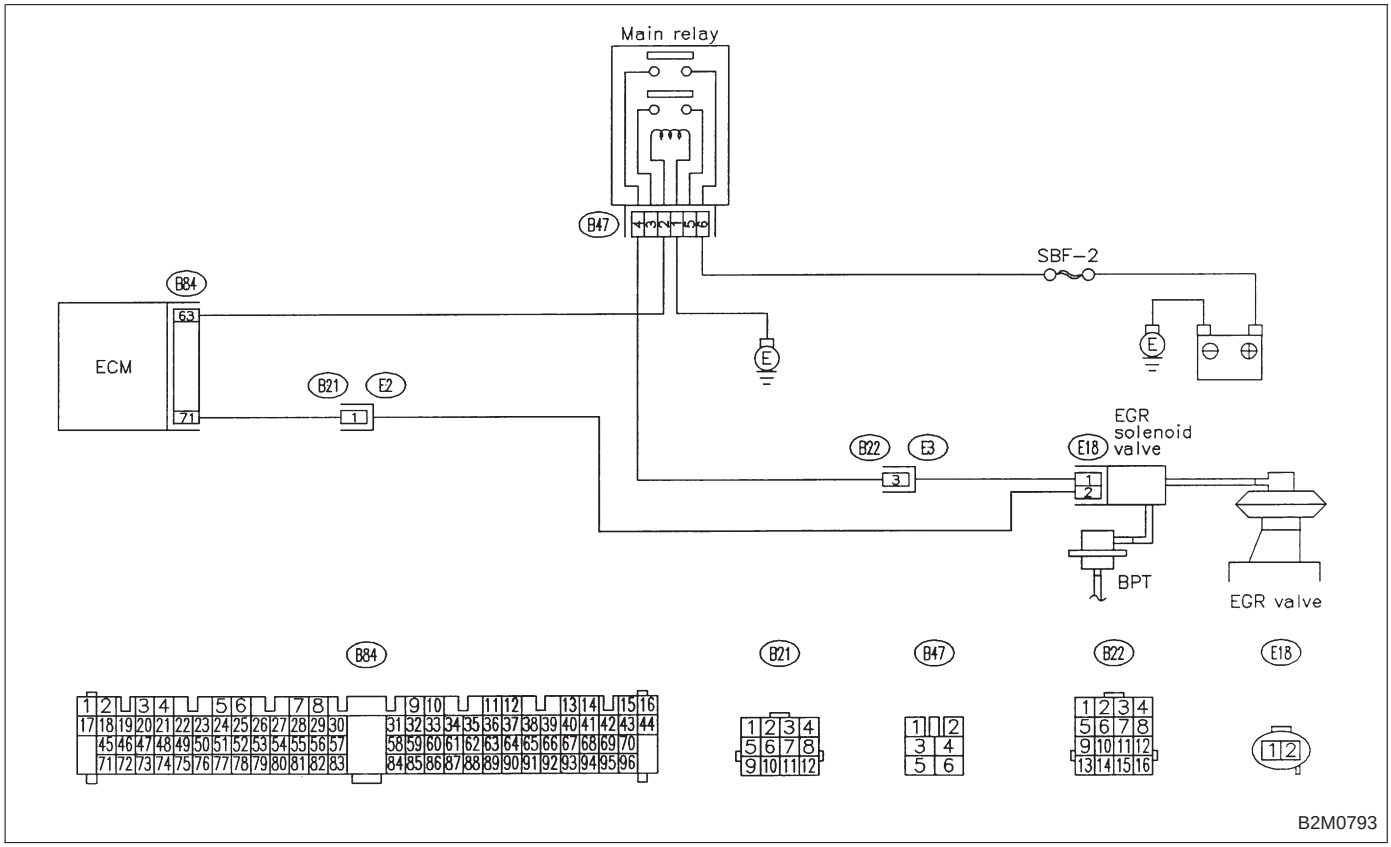

NOTE:
Check exhaust gas recirculation control solenoid valve circuit.
<Ref. to 2-7 [T10AP0].>

OBD	(FB1)
P0420	<CAT>

OBD0329

AQ: DTC P0420 — CATALYST SYSTEM EFFICIENCY BELOW THRESHOLD —

WIRING DIAGRAM:

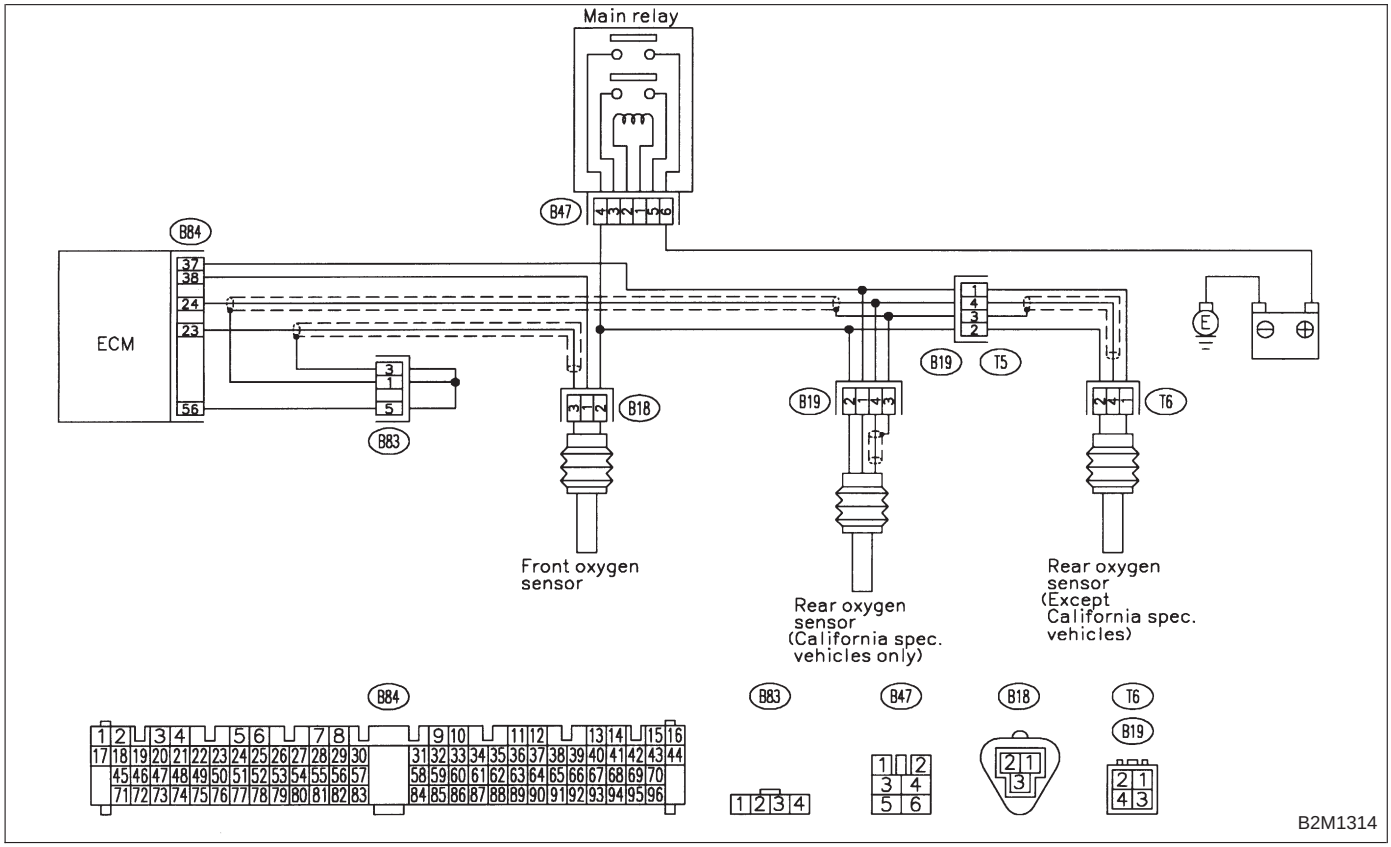

NOTE:
Check catalyst system.
<Ref. to 2-7 [T10AQ0].>

OBD (FB1)

P0440 <EVAP>

H2M1365

AR: DTC P0440 — EVAPORATIVE EMISSION CONTROL SYSTEM MALFUNCTION —

WIRING DIAGRAM:

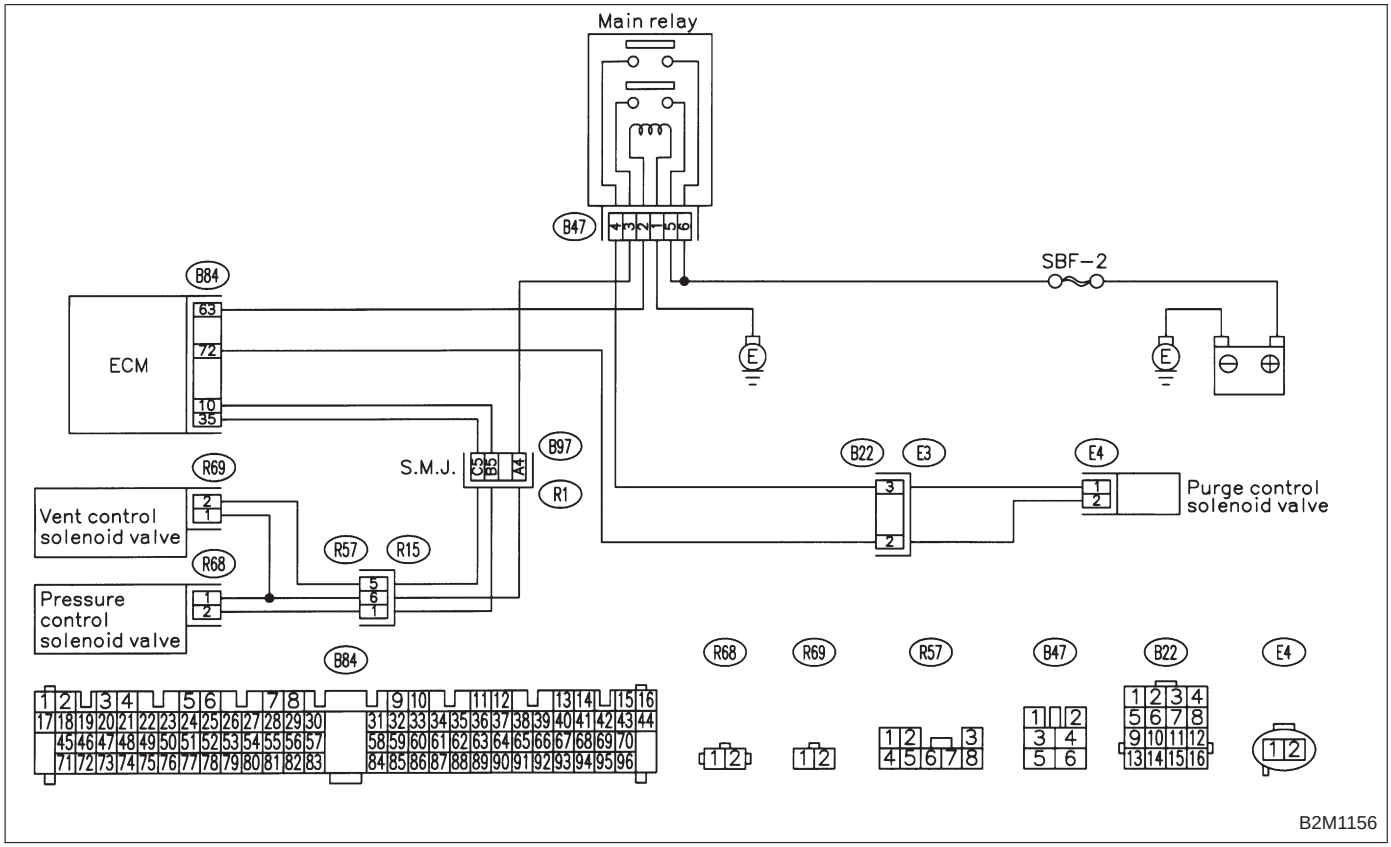

NOTE:
Check evaporative emission control system.
<Ref. to 2-7 [T10AR0].>

OBD	(FB1)
P0441	<CPC_F>

OBD0331

AS: DTC P0441 — EVAPORATIVE EMISSION CONTROL SYSTEM INCORRECT PURGE FLOW —

WIRING DIAGRAM:

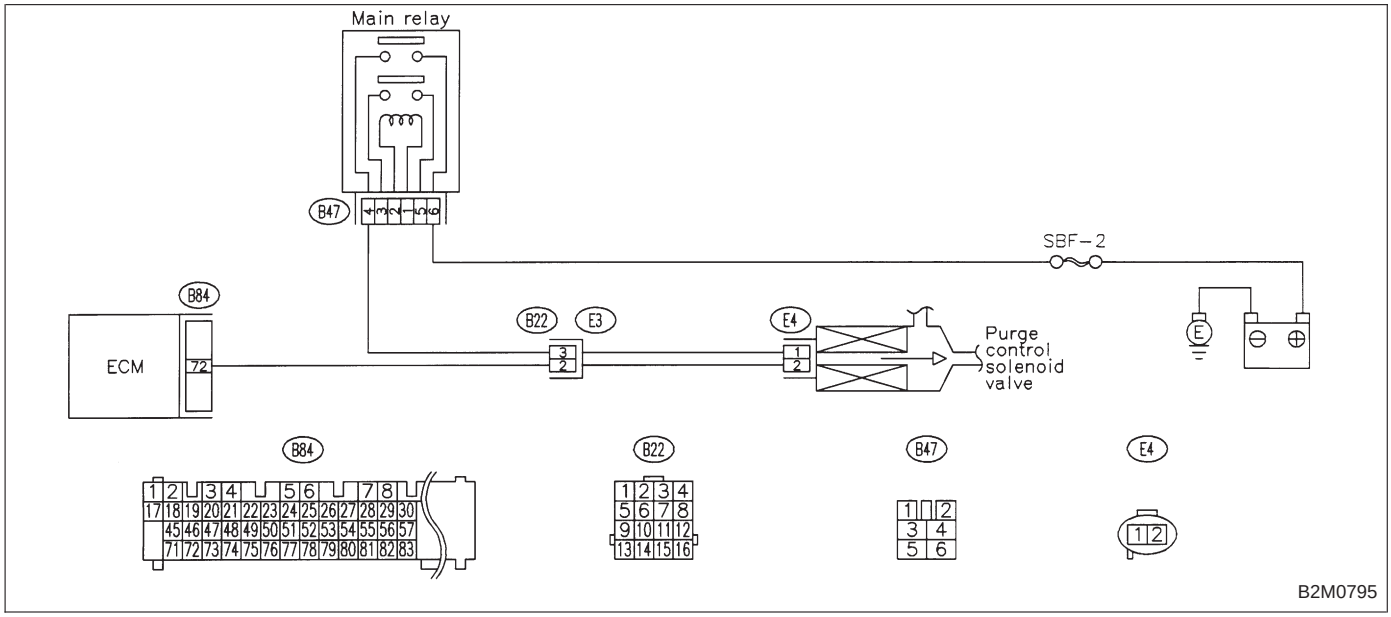

NOTE:
Check canister purge control system.
<Ref. to 2-7 [T10AS0].>

OBD	(FB1)
P0443	<CPC>

OBD0335

AT: DTC P0443 — EVAPORATIVE EMISSION CONTROL SYSTEM PURGE CONTROL VALVE CIRCUIT LOW INPUT —

WIRING DIAGRAM:

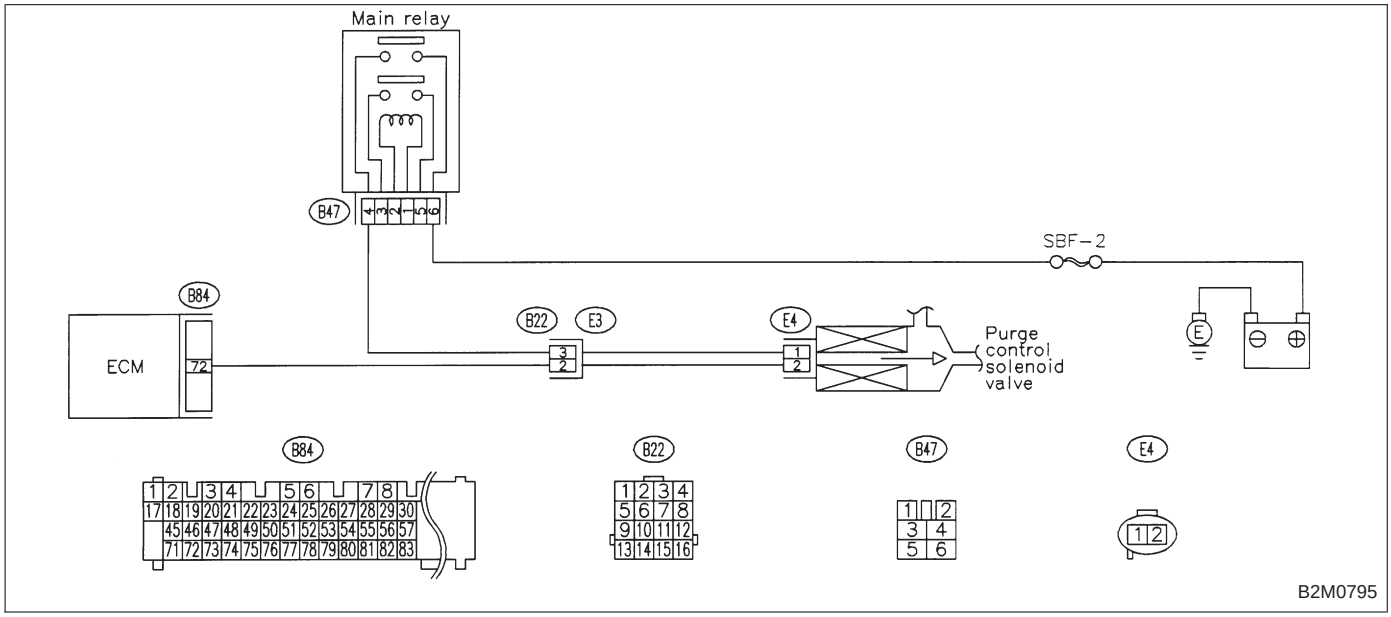

NOTE:
Check purge control solenoid valve circuit.
<Ref. to 2-7 [T10AT0].>

OBD (FB1)

P0446<VCMSOL_LO>

B2M1098

AU: DTC P0446 — EVAPORATIVE EMISSION CONTROL SYSTEM VENT CONTROL LOW INPUT —

DTC DETECTING CONDITION:

- Two consecutive driving cycles with fault

WIRING DIAGRAM:

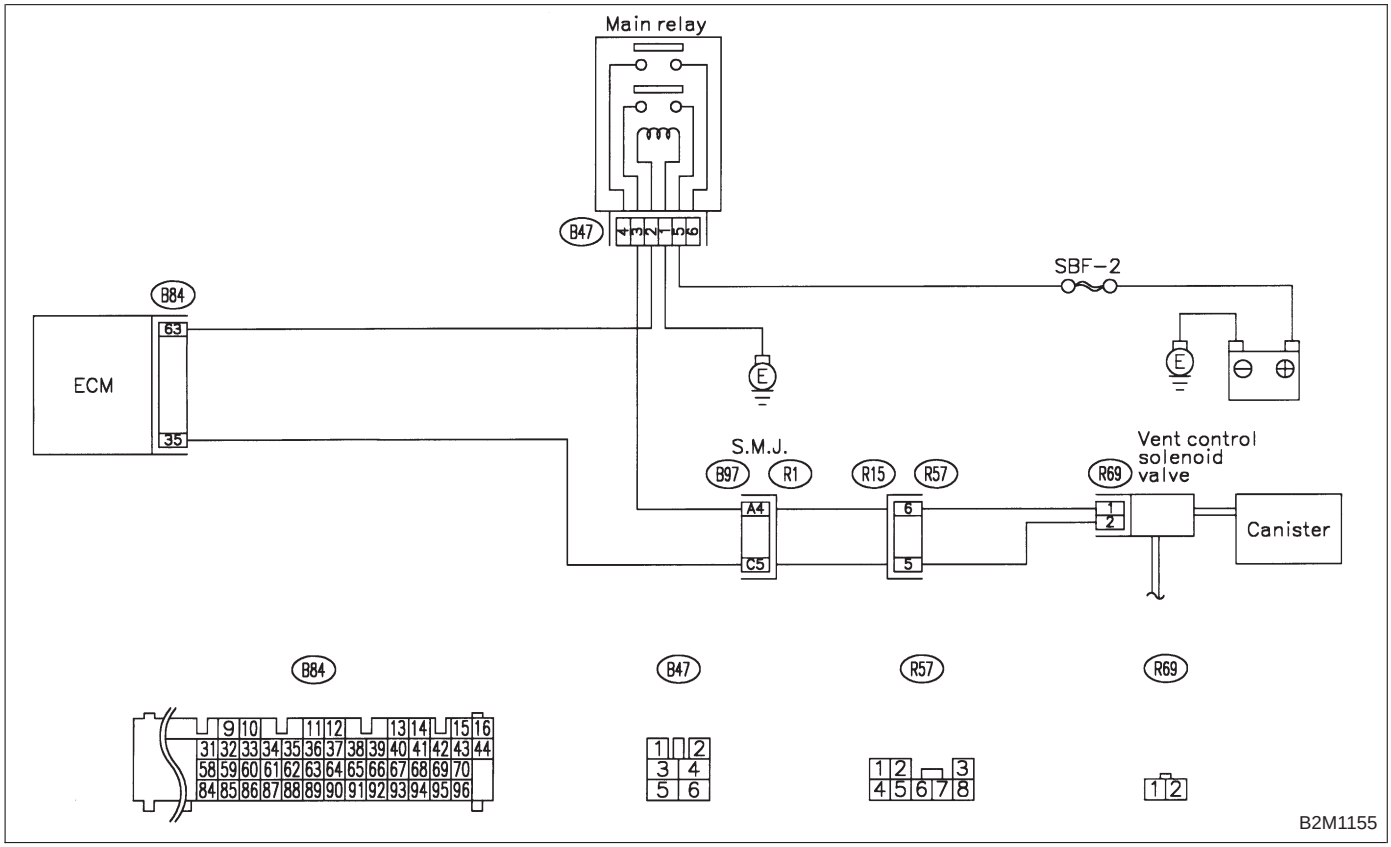

CAUTION:
After repair or replacement of faulty parts, conduct CLEAR MEMORY and INSPECTION MODES.
<Ref. to 2-7 [T3D0] and [T3E0].>

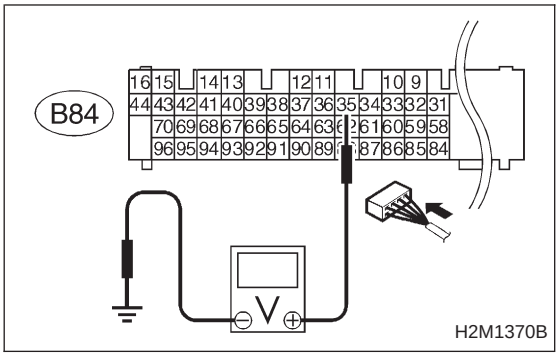

11AU1	CHECK OUTPUT SIGNAL FROM ECM.

1) Turn ignition switch to ON.
2) Measure voltage between ECM and chassis ground.

CHECK : ***Connector & terminal (B84) No. 35 (+) — Chassis ground (−): Is the voltage more than 10 V?***

YES : Go to next CHECK .

NO : Go to step **11AU2**.

CHECK : ***Is there poor contact in ECM connector?***

YES : Repair poor contact in ECM connector.

NO : Even if MIL lights up, the circuit has returned to a normal condition at this time. (However, the possibility of poor contact still remains.)

NOTE:
In this case, repair the following:
- Poor contact in vent control solenoid valve connector
- Poor contact in ECM connector
- Poor contact in coupling connectors (B97 and R57)

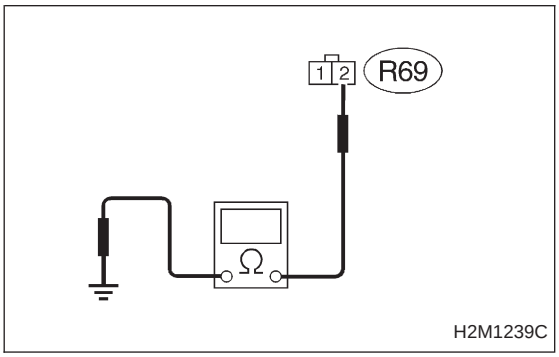

11AU2	CHECK HARNESS BETWEEN VENT CONTROL SOLENOID VALVE AND ECM CONNECTOR.

1) Turn ignition switch to OFF.
2) Disconnect connectors from vent control solenoid valve and ECM.
3) Measure resistance of harness between vent control solenoid valve connector and chassis ground.

CHECK : ***Connector & terminal (R69) No. 2 — Chassis ground: Is the resistance less than 10 Ω?***

YES : Repair ground short circuit in harness between ECM and vent control solenoid valve connector.

NO : Go to next step 4).

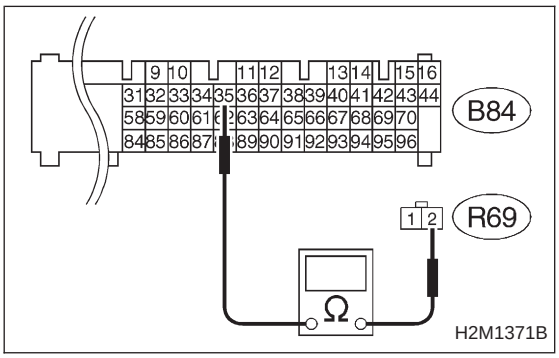

4) Measure resistance of harness between ECM and vent control solenoid valve connector.

CHECK : ***Connector & terminal (B84) No. 35 — (R69) No. 2: Is the voltage less than 1 Ω?***

YES : Go to step **11AU3**.

NO : Repair harness and connector.

NOTE:
In this case, repair the following:
- Open circuit in harness between ECM and vent control solenoid valve connector
- Poor contact in coupling connectors (B97 and R57)

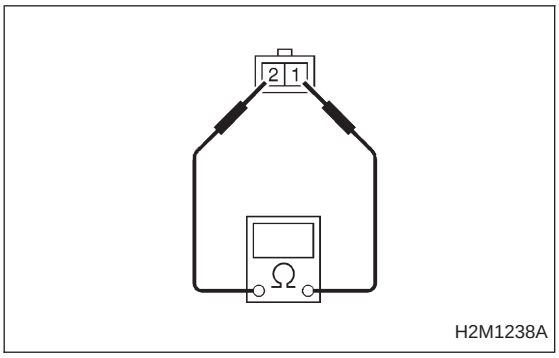

11AU3	CHECK VENT CONTROL SOLENOID VALVE.

Measure resistance between vent control solenoid valve terminals.

CHECK : ***Terminals***
No. 1 — No. 2:
Is the resistance between 10 and 100 Ω?

YES : Go to step **11AU4**.

NO : Replace vent control solenoid valve.

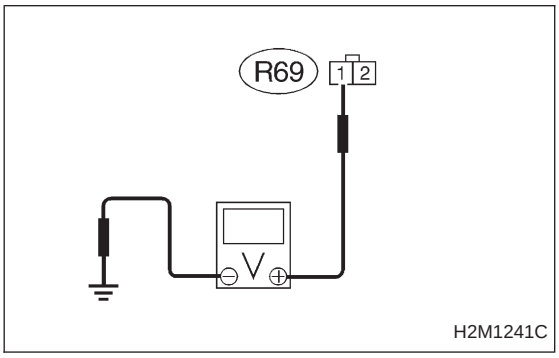

11AU4	CHECK POWER SUPPLY TO VENT CONTROL SOLENOID VALVE.

1) Turn ignition switch to ON.
2) Measure voltage between vent control solenoid valve and chassis ground.

CHECK : ***Connector & terminal***
(R69) No. 1 (+) — Chassis ground (−):
Is the voltage more than 10 V?

YES : Go to next CHECK .

NO : Repair harness and connector.

NOTE:
In this case, repair the following:
- Open circuit in harness between main relay and vent control solenoid valve
- Poor contact in coupling connectors (B97 and R57)
- Poor contact in main relay connector

CHECK : ***Is there poor contact in vent control solenoid valve connector?***

YES : Repair poor contact in vent control solenoid valve connector.

NO : Contact with SOA service.

NOTE:
Inspection by DTM is required, because probable cause is deterioration of multiple parts.

OBD (FB1)

P0451 <TNKP_F>

H2M1377

AV: DTC P0451 — EVAPORATIVE EMISSION CONTROL SYSTEM PRESSURE SENSOR RANGE/PERFORMANCE PROBLEM —

WIRING DIAGRAM:

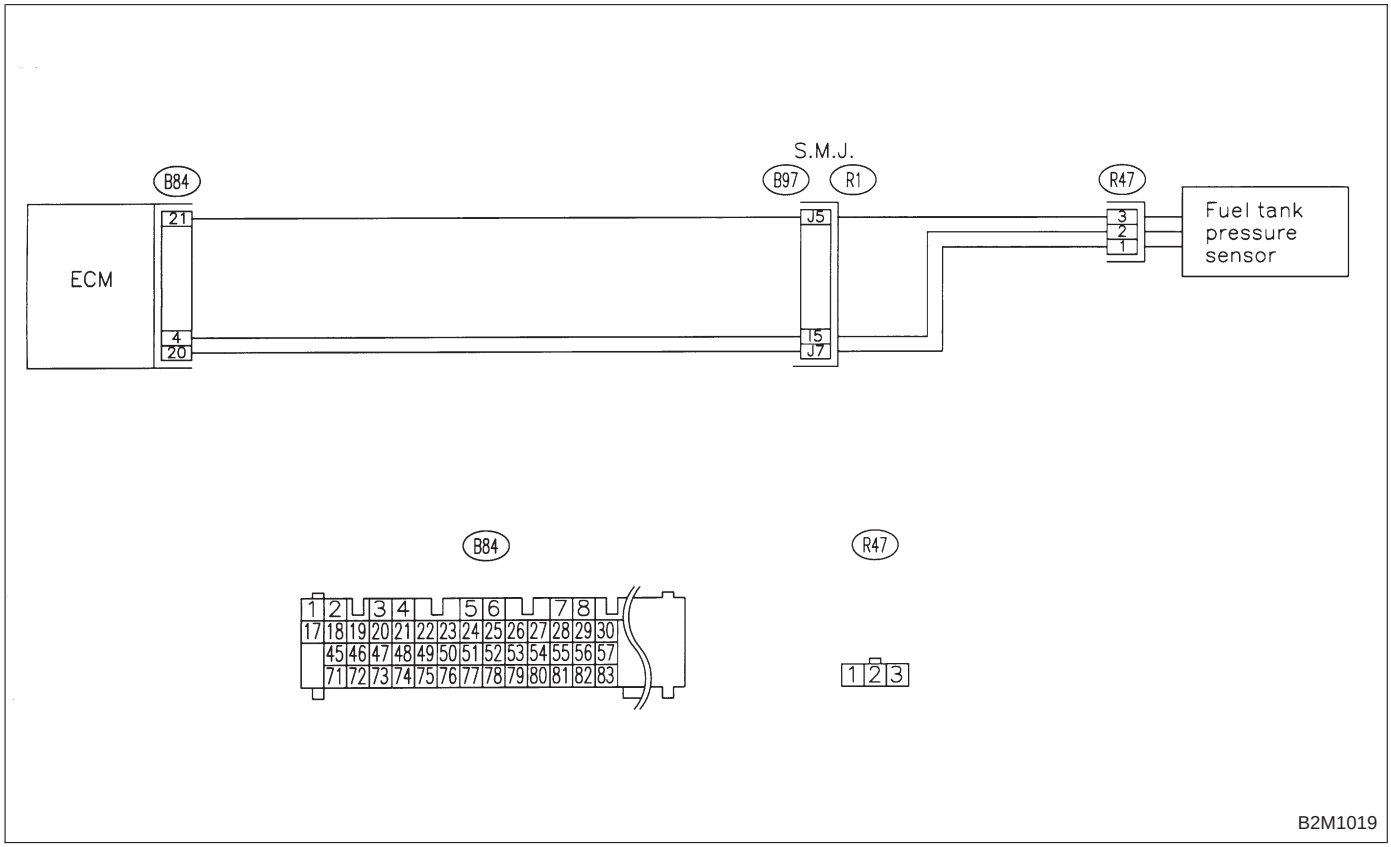

NOTE:
Check fuel tank pressure control system.
<Ref. to 2-7 [T10AV0].>

OBD (FB1)

P0452 <TNKP_LOW>

B2M1099

AW: DTC P0452 — EVAPORATIVE EMISSION CONTROL SYSTEM PRESSURE SENSOR LOW INPUT —

DTC DETECTING CONDITION:

- Immediately at fault recognition

WIRING DIAGRAM:

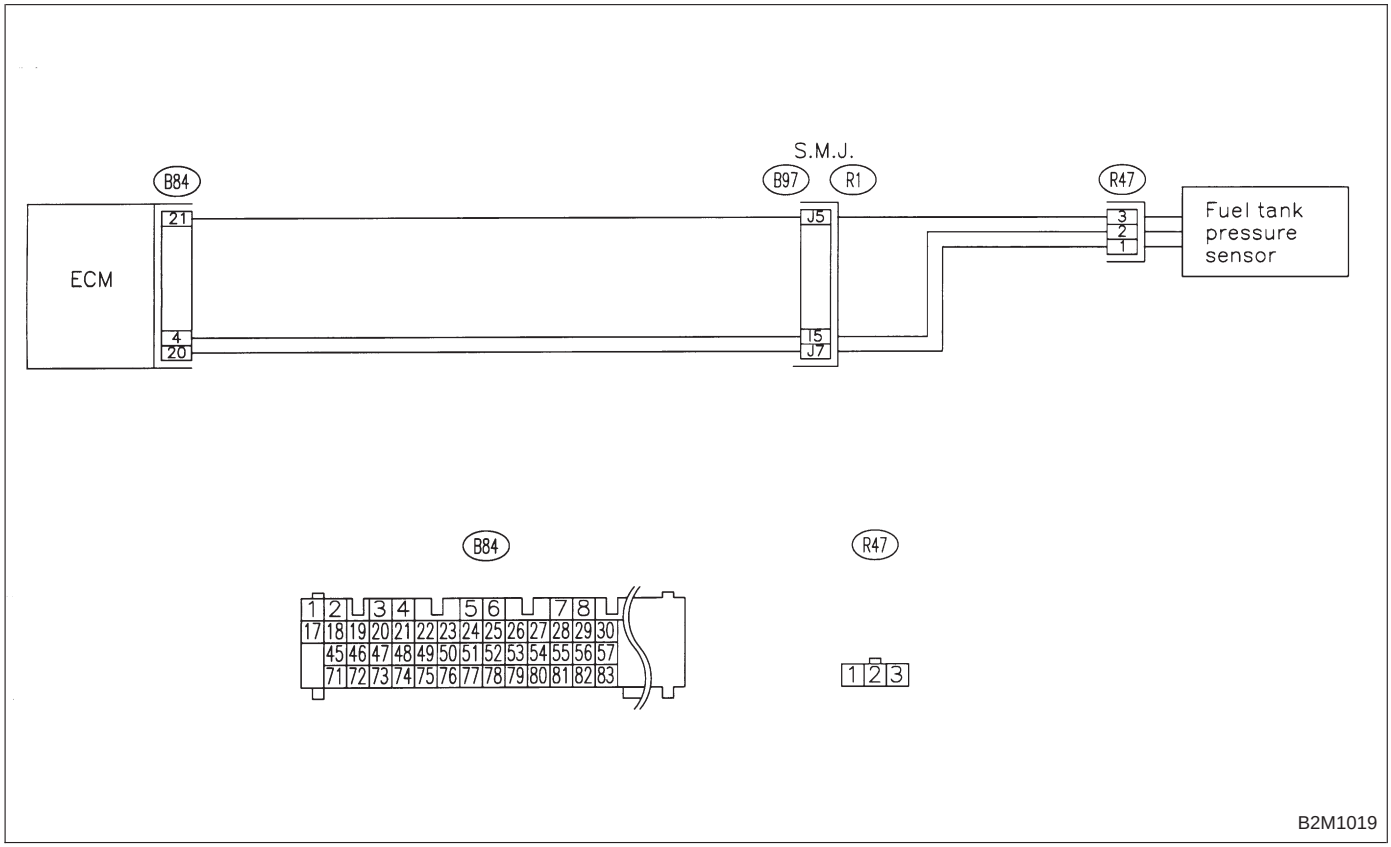

B2M1019

CAUTION:
After repair or replacement of faulty parts, conduct CLEAR MEMORY and INSPECTION MODES.
<Ref. to 2-7 [T3D0] and [T3E0].>

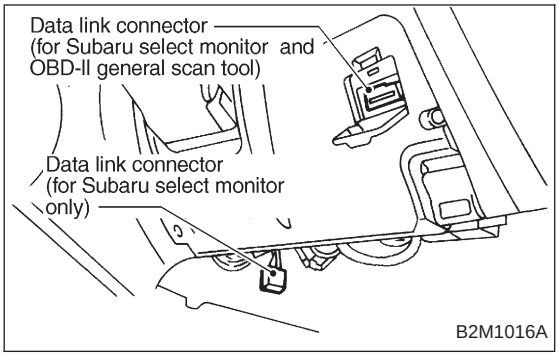

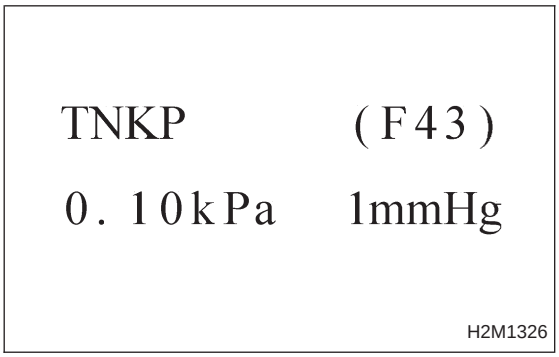

11AW1	CONNECT SUBARU SELECT MONITOR OR THE OBD-II GENERAL SCAN TOOL, AND READ DATA.

1) Turn ignition switch to OFF.
2) Remove fuel filler cap.
3) Install fuel filler cap.
4) Connect Subaru Select Monitor or the OBD-II general scan tool to data link connector.
5) Turn ignition switch to ON and Subaru Select Monitor or the OBD-II general scan tool switch to ON.
6) Read the data on Subaru Select Monitor or the OBD-II general scan tool.

● Subaru Select Monitor

Designate mode using function key.

Function mode: F43

● F43: Display shows pressure signal value sent from fuel tank pressure sensor.

CHECK : ***Is the value less than −2.8 kPa in function mode F43?***

YES : Go to step **11AW2**.

NO : Even if MIL lights up, the circuit has returned to a normal condition at this time.

● OBD-II general scan tool

For detailed operation procedures, refer to the OBD-II General Scan Tool Instruction Manual.

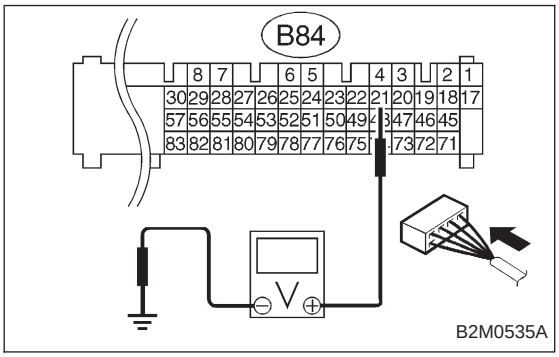

11AW2	CHECK INPUT SIGNAL FOR ECM. (USING VOLTAGE METER AND SUBARU SELECT MONITOR.)

1) Measure voltage between ECM connector and chassis ground.

CHECK : ***Connector & terminal (B84) No. 21 (+) — Chassis ground (−): Is the voltage more than 4.5 V?***

YES : Go to next step 2).

NO : Go to next CHECK .

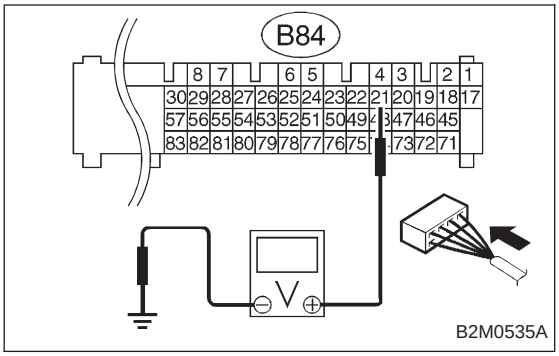

CHECK : ***Does the voltage change more than 4.5 V by shaking harness and connector of ECM while monitoring the value with voltage meter?***

YES : Repair poor contact in ECM connector.

NO : Contact with SOA service.

NOTE:
Inspection by DTM is required, because probable cause is deterioration of multiple parts.

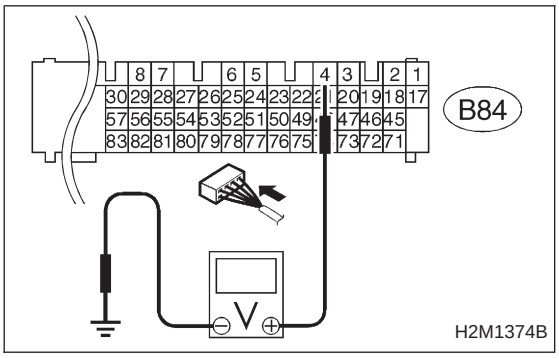

2) Measure voltage between ECM and chassis ground.

CHECK : ***Connector & terminal (B84) No. 4 (+) — Chassis ground (−): Is the voltage less than 0.2 V?***

YES : Go to step **11AW3**.

NO : Go to next step 3).

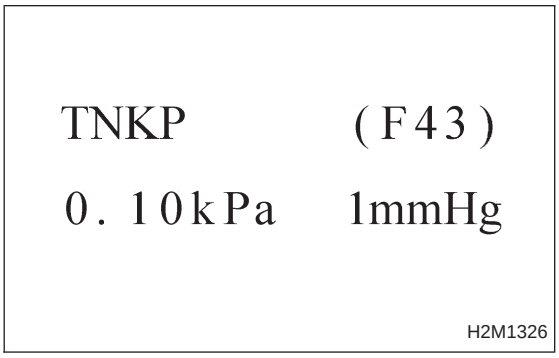

3) Read data on Subaru Select Monitor.

● Subaru Select Monitor

Designate mode using function key.

Function mode: F43

● F43: Display shows pressure signal value sent from fuel tank pressure sensor.

CHECK : ***Does the value change more than −2.8 kPa by shaking harness and connector of ECM while monitoring the value with Subaru select monitor?***

YES : Repair poor contact in ECM connector.

NO : Go to step **11AW3**.

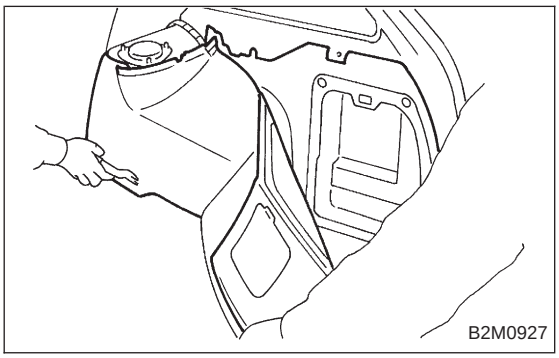

11AW3	CHECK HARNESS BETWEEN ECM AND FUEL TANK PRESSURE SENSOR CONNECTOR.

1) Turn ignition switch to OFF.
2) Detach right side rear quarter trim panel.
3) Remove right side rear quarter trim pocket.
4) Detach right side rear quarter insulator.

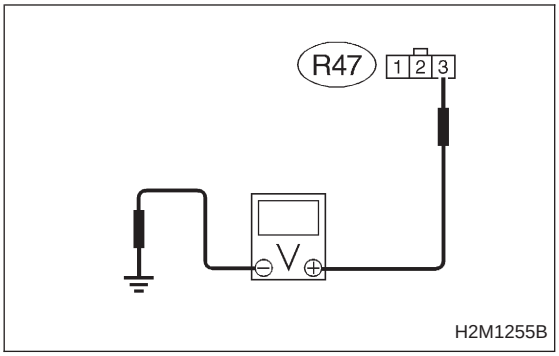

5) Disconnect connector from fuel tank pressure sensor.
6) Turn ignition switch to ON.
7) Measure voltage between fuel tank pressure sensor connector and chassis ground.

CHECK : ***Connector & terminal (R47) No. 3 (+) — Chassis ground (−): Is the voltage more than 4.5 V?***

YES : Go to next step 8).

NO : Repair harness and connector.

NOTE:
In this case, repair the following:
- Open circuit in harness between ECM and fuel tank pressure sensor connector
- Poor contact in coupling connector (B97)

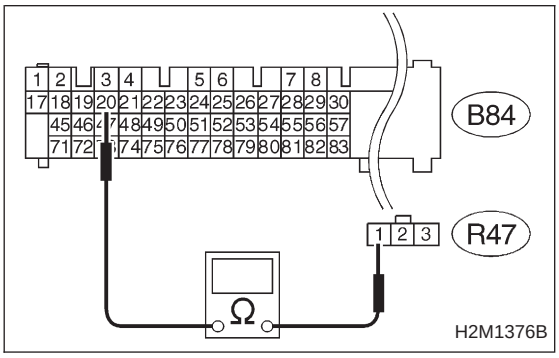

8) Turn ignition switch to OFF.
9) Disconnect connector from ECM.
10) Measure resistance of harness between ECM and pressure sensor connector.

CHECK : ***Connector & terminal (B84) No. 20 — (R47) No. 1: Is the resistance less than 1 Ω?***

YES : Go to next step 11).

NO : Repair harness and connector.

NOTE:
In this case, repair the following:
- Open circuit in harness between ECM and fuel tank pressure sensor connector
- Poor contact in coupling connector (B97)

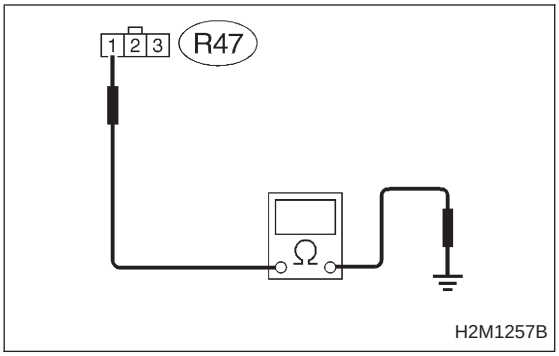

11) Measure resistance of harness between fuel tank pressure sensor connector and chassis ground.

CHECK : ***Connector & terminal (R47) No. 1 — Chassis ground: Is the resistance more than 500 kΩ?***

YES : Go to next CHECK .

NO : Repair ground short circuit in harness between ECM and fuel tank pressure sensor connector.

CHECK : ***Is there poor contact in fuel tank pressure sensor connector?***

YES : Repair poor contact in fuel tank pressure sensor connector.

NO : Replace fuel tank pressure sensor.

OBD (FB1)

P0453 <TNKP_HI>

B2M1100

AX: DTC P0453 — EVAPORATIVE EMISSION CONTROL SYSTEM PRESSURE SENSOR HIGH INPUT —

DTC DETECTING CONDITION:

- Immediately at fault recognition

WIRING DIAGRAM:

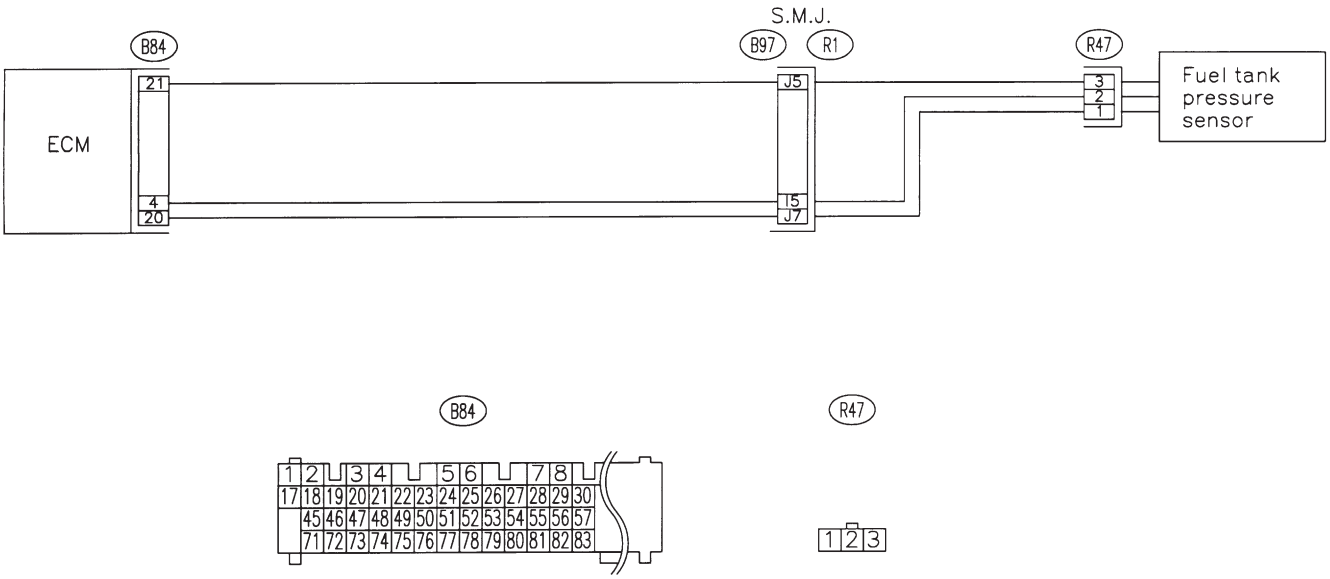

B2M1019

CAUTION:
After repair or replacement of faulty parts, conduct CLEAR MEMORY and INSPECTION MODES.
<Ref. to 2-7 [T3D0] and [T3E0].>

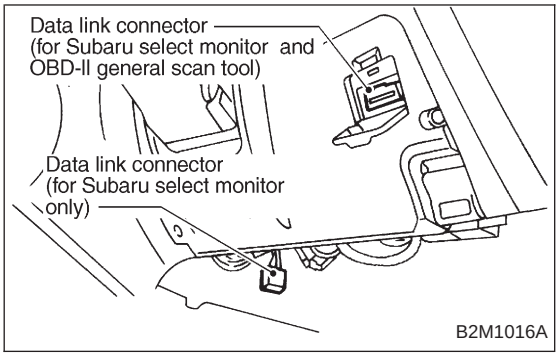

11AX1	CONNECT SUBARU SELECT MONITOR OR THE OBD-II GENERAL SCAN TOOL, AND READ DATA.

1) Turn ignition switch to OFF.
2) Remove fuel filler cap.
3) Install fuel filler cap.
4) Connect Subaru Select Monitor or the OBD-II general scan tool to data link connector.
5) Turn ignition switch to ON and Subaru Select Monitor or the OBD-II general scan tool switch to ON.

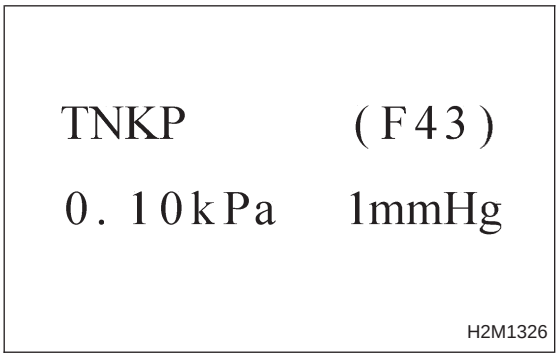

6) Read the data on Subaru Select Monitor or the OBD-II general scan tool.
● Subaru Select Monitor
Designate mode using function key.

Function mode: F43

● F43: Display shows pressure signal value sent from fuel tank pressure sensor.

CHECK : ***Is the value more than 2.8 kPa in function mode F43?***

YES : Go to step **11AX4**.

NO : Go to step **11AX2**.

● OBD-II general scan tool

For detailed operation procedures, refer to the OBD-II General Scan Tool Instruction Manual.

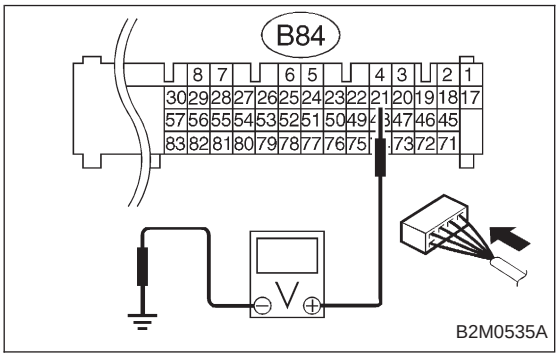

11AX2	CHECK INPUT SIGNAL FOR ECM. (USING VOLTAGE METER AND SUBARU SELECT MONITOR.)

1) Measure voltage between ECM connector and chassis ground.

CHECK : ***Connector & terminal (B84) No. 21 (+) — Chassis ground (−): Is the voltage more than 4.5 V?***

YES : Go to next step 2).

NO : Go to next CHECK .

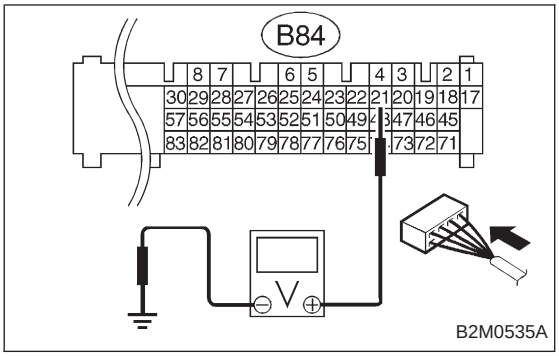

CHECK : ***Does the voltage change more than 4.5 V by shaking harness and connector of ECM while monitoring the value with voltage meter?***

YES : Repair poor contact in ECM connector.

NO : Contact with SOA service.

NOTE:
Inspection by DTM is required, because probable cause is deterioration of multiple parts.

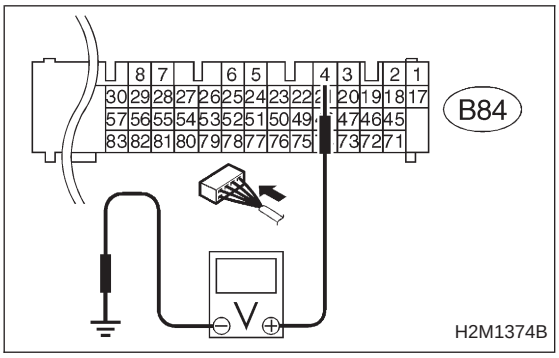

2) Measure voltage between ECM and chassis ground.

CHECK : ***Connector & terminal (B84) No. 4 (+) — Chassis ground (−): Is the voltage less than 0.2 V?***

YES : Go to step **11AX3**.

NO : Go to next step 3).

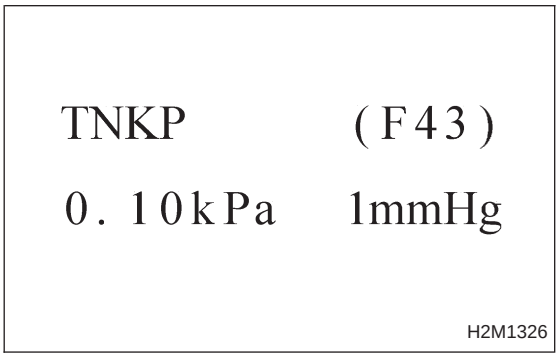

3) Read data on Subaru Select Monitor.

- Subaru Select Monitor

Designate mode using function key.

Function mode: F43

- F43: Display shows pressure signal value sent from fuel tank pressure sensor.

CHECK : ***Does the value change more than −2.8 kPa by shaking harness and connector of ECM while monitoring the value with Subaru select monitor?***

YES : Repair poor contact in ECM connector.

NO : Go to step **11AX3**.

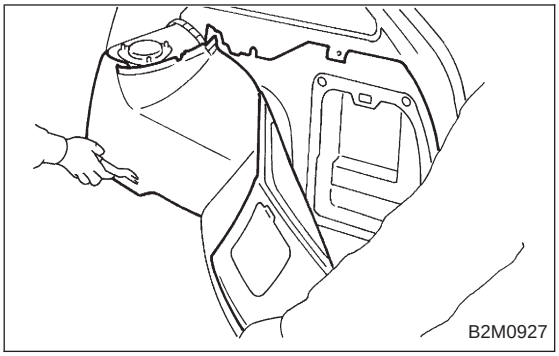

11AX3	CHECK HARNESS BETWEEN ECM AND FUEL TANK PRESSURE SENSOR CONNECTOR.

1) Turn ignition switch to OFF.
2) Detach right side rear quarter trim panel.
3) Remove right side rear quarter trim pocket.
4) Detach right side rear quarter insulator.

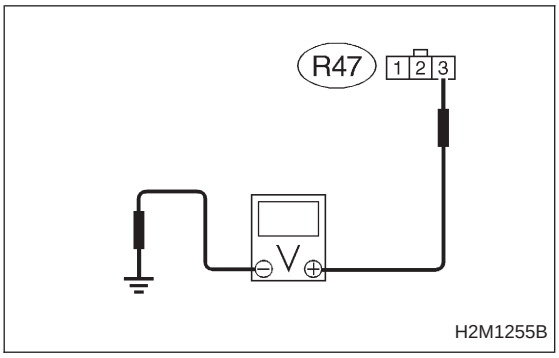

5) Disconnect connector from fuel tank pressure sensor.
6) Turn ignition switch to ON.
7) Measure voltage between fuel tank pressure sensor connector and chassis ground.

CHECK : ***Connector & terminal (R47) No. 3 (+) — Chassis ground (−): Is the voltage more than 4.5 V?***

YES : Go to next step 8).

NO : Repair harness and connector.

NOTE:
In this case, repair the following:
- Open circuit in harness between ECM and fuel tank pressure sensor connector
- Poor contact in coupling connector (B97)

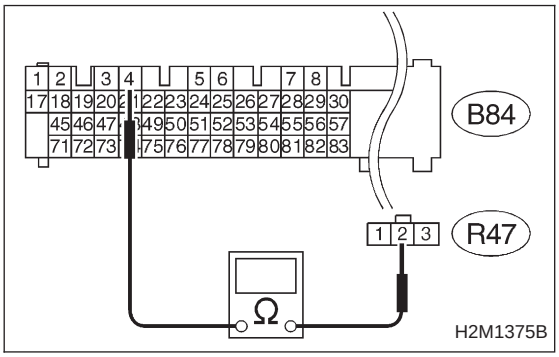

8) Turn ignition switch to OFF.
9) Disconnect connector from ECM.
10) Measure resistance of harness between ECM and pressure sensor connector.

CHECK : ***Connector & terminal (B84) No. 4 — (R47) No. 2: Is the resistance less than 1 Ω?***

YES : Go to next CHECK .

NO : Repair harness and connector.

NOTE:
In this case, repair the following:
- Open circuit in harness between ECM and fuel tank pressure sensor connector
- Poor contact in coupling connector (B97)

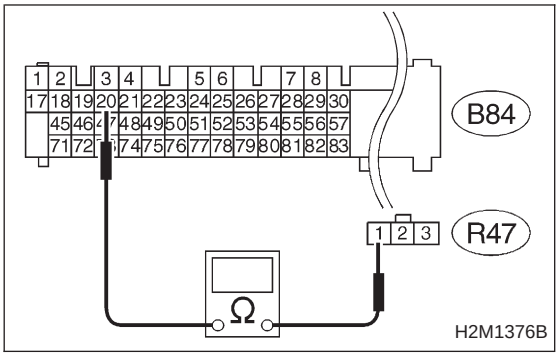

CHECK : ***Connector & terminal (B84) No. 20 — (R47) No. 1: Is the resistance less than 1 Ω?***

YES : Go to next CHECK .

NO : Repair harness and connector.

NOTE:
In this case, repair the following:
- Open circuit in harness between ECM and fuel tank pressure sensor connector
- Poor contact in coupling connector (B97)

CHECK : ***Is there poor contact in fuel tank pressure sensor connector?***

YES : Repair poor contact in fuel tank pressure sensor connector.

NO : Replace fuel tank pressure sensor.

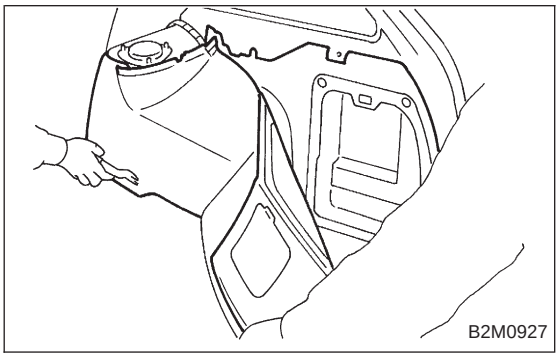

11AX4	CHECK HARNESS BETWEEN ECM AND FUEL TANK PRESSURE SENSOR CONNECTOR.

1) Turn ignition switch to OFF and Subaru Select Monitor or the OBD-II general scan tool switch to OFF.
2) Detach right side rear quarter trim panel.
3) Remove right side rear quarter trim pocket.
4) Detach right side rear quarter insulator.

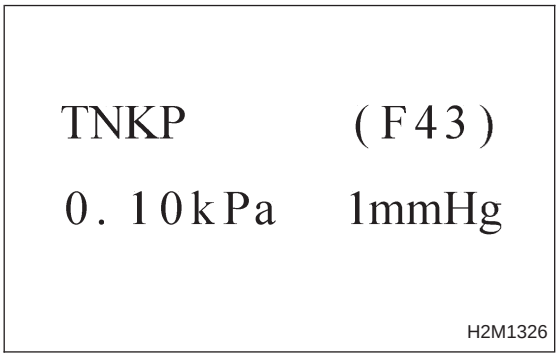

5) Disconnect connector from fuel tank pressure sensor.
6) Remove fuel filler cap.
7) Install fuel filler cap.
8) Turn ignition switch to ON and Subaru Select Monitor or the OBD-II general scan tool switch to ON.
9) Read data on Subaru select monitor or the OBD-II general scan tool.
- Subaru Select Monitor

Designate mode using function key.

Function mode: F43

CHECK : ***Is the value more than 2.8 kPa in function mode F43?***

YES : Repair battery short circuit in harness between ECM and fuel tank pressure sensor connector.

NO : Replace fuel tank pressure sensor.

- OBD-II general scan tool

For detailed operation procedures, refer to the OBD-II General Scan Tool Instruction Manual.

OBD (FB1)

P0461 <FLVL_R>

B2M1101

AY: DTC P0461 — FUEL LEVEL SENSOR CIRCUIT RANGE/ PERFORMANCE PROBLEM —

DTC DETECTING CONDITION:

- Two consecutive driving cycles with fault

WIRING DIAGRAM:

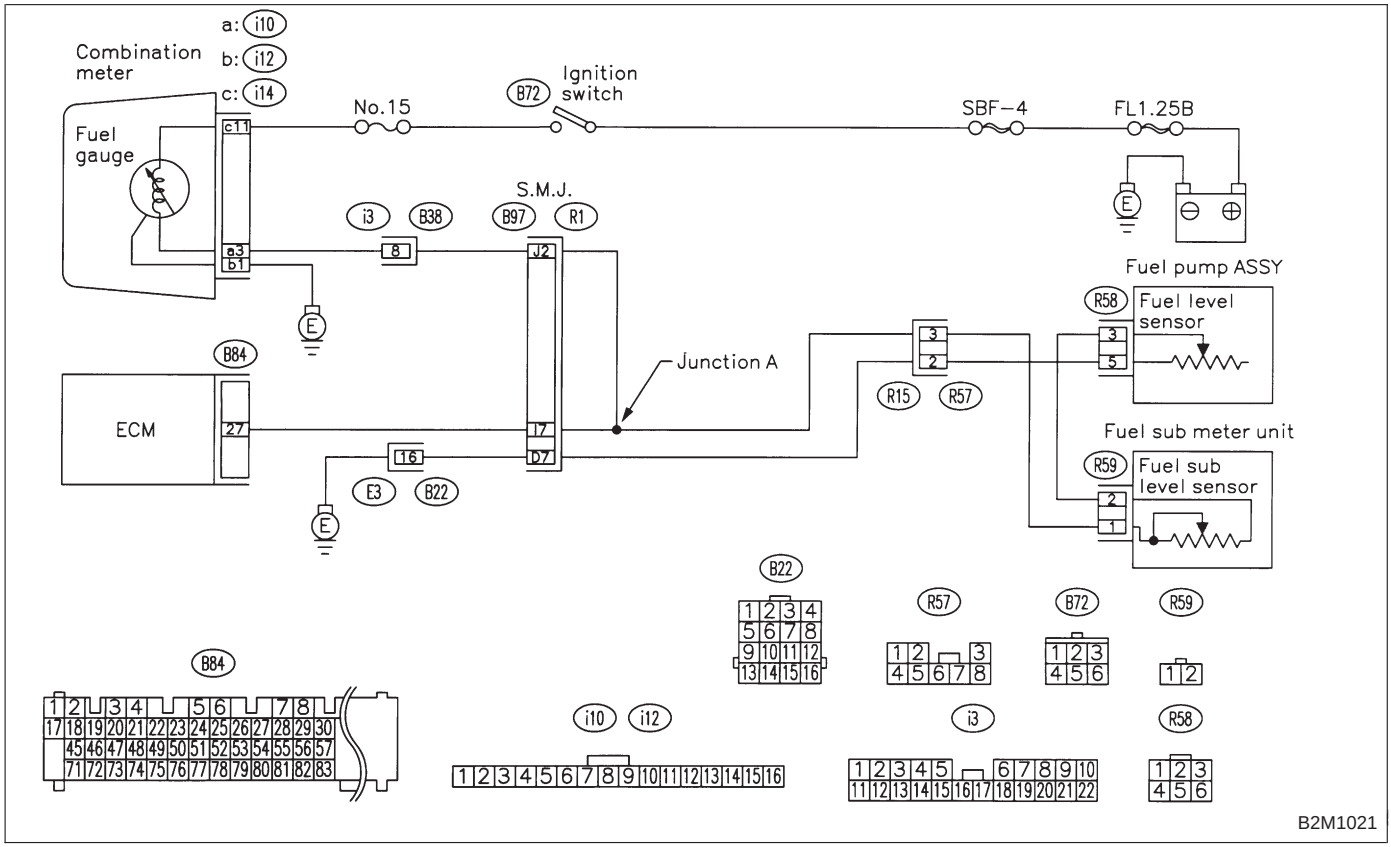

CAUTION:
After repair or replacement of faulty parts, conduct CLEAR MEMORY and INSPECTION MODES.
<Ref. to 2-7 [T3D0] and [T3E0].>

11AY1	CHECK DTC P0462 OR P0463 ON DISPLAY.

CHECK : ***Does the Subaru select monitor or OBD-II general scan tool indicate DTC P0462 or P0463?***

YES : Inspect DTC P0462 or P0463 using “11. Diagnostics Chart with Trouble Code”. <Ref. to 2-7 [T11TA0].>

NOTE:
In this case, it is not necessary to inspect this trouble.

NO : Replace fuel sending unit and fuel sub meter unit.

OBD (FB1)

P0462 <FLVL_LOW>

B2M1102

AZ: DTC P0462 — FUEL LEVEL SENSOR CIRCUIT LOW INPUT —

DTC DETECTING CONDITION:

- Two consecutive driving cycles with fault

WIRING DIAGRAM:

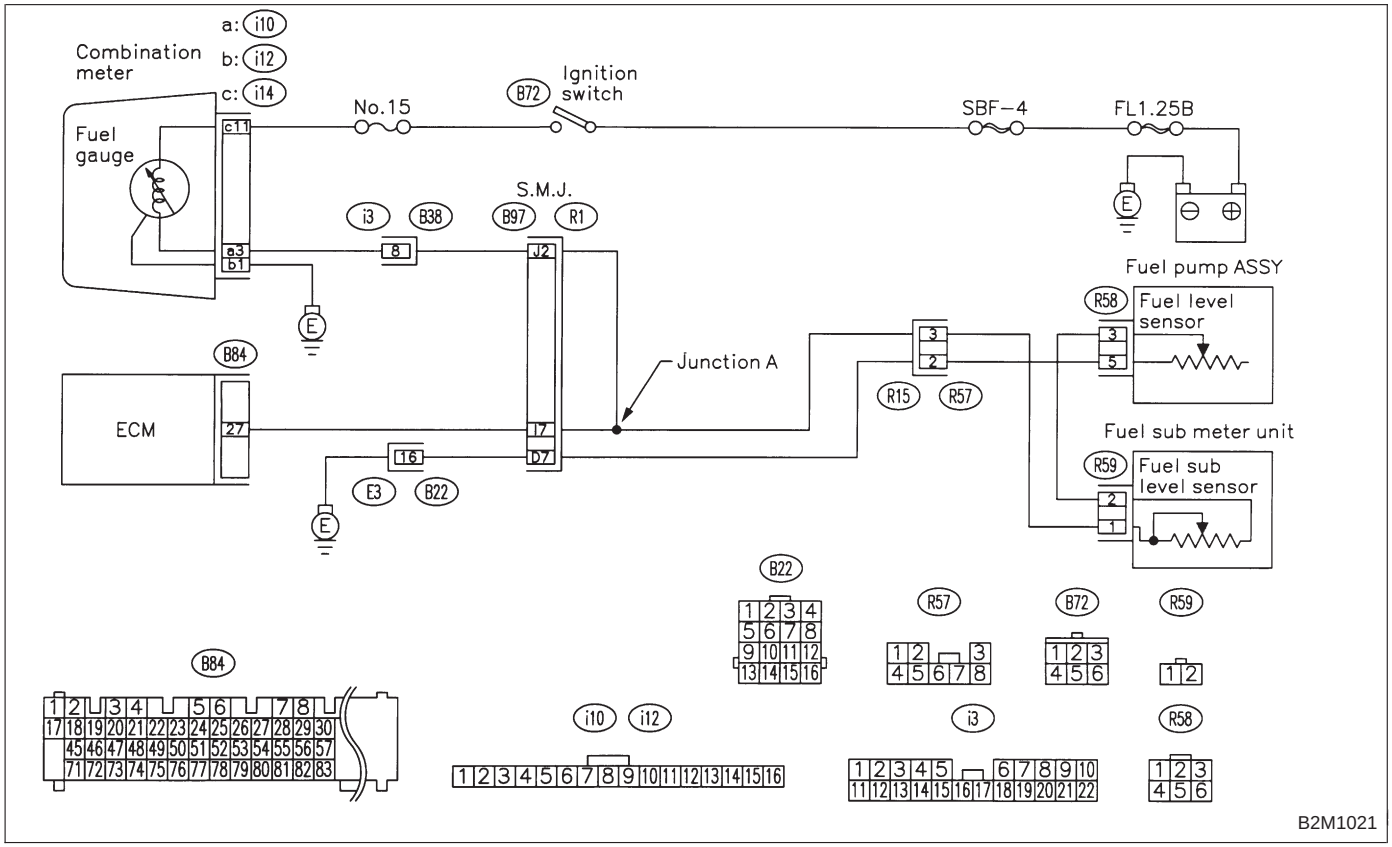

CAUTION:
After repair or replacement of faulty parts, conduct CLEAR MEMORY and INSPECTION MODES.
<Ref. to 2-7 [T3D0] and [T3E0].>

11AZ1	CHECK SPEEDOMETER AND TACHOMETER OPERATION IN COMBINATION METER.

CHECK : ***Does speedometer and tachometer operate normally?***

YES : Go to step **11AZ3**.

NO : Go to step **11AZ2**.

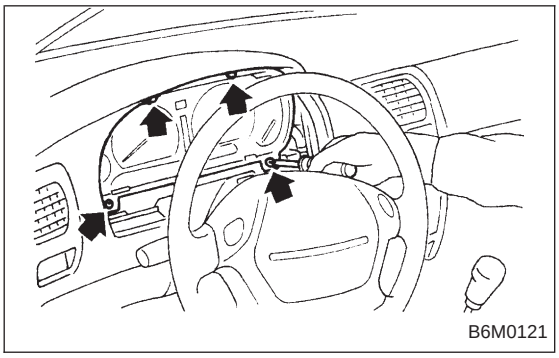

11AZ2	CHECK GROUND CIRCUIT OF COMBINATION METER.

1) Turn ignition switch to OFF.
2) Pull out combination meter from instrument panel. <Ref. to 6-2 [W13A1].>
3) Disconnect connector from combination meter.

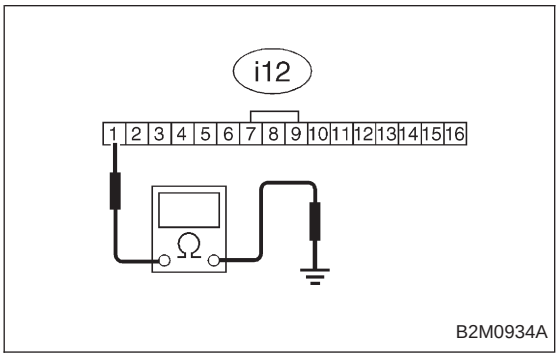

4) Measure resistance of harness between combination meter connector and chassis ground.

CHECK : ***Connector & terminal (i12) No. 1 — Chassis ground: Is resistance less than 5 Ω?***

YES : Repair or replace combination meter.

NO : Repair harness and connector.

NOTE:
In this case, repair the following:
- Open circuit in harness between combination meter connector and grounding terminal
- Poor contact in combination meter connector
- Poor contact in grounding terminal

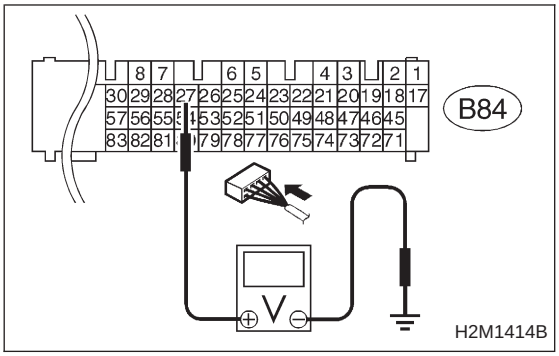

11AZ3	CHECK INPUT SIGNAL FOR ECM. (USING VOLTAGE METER AND SUBARU SELECT MONITOR.)

1) Turn ignition switch to ON. (Engine OFF)
2) Measure voltage between ECM connector and chassis ground.

CHECK : ***Connector & terminal (B84) No. 27 (+) — Chassis ground (−): Is the voltage less than 0.12 V?***

YES : Go to step **11AZ4**.

NO : Go to next CHECK .

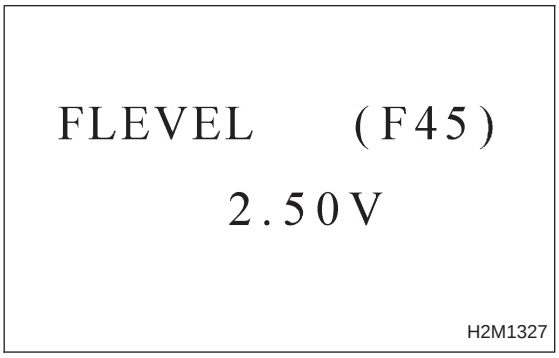

CHECK : ***Does the value change less than 0.12 V by shaking harness and connector of ECM while monitoring the value with Subaru Select Monitor?***

- Subaru Select Monitor

Designate mode using function key.

Function mode: F45

- F45: Fuel level sensor output signal is indicated.

YES : Repair poor contact in ECM connector.

NO : Even if MIL lights up, the circuit has returned to a normal condition at this time. A temporary poor contact of the connector may be the cause.

NOTE:
In this case, repair the following:
- Poor contact in fuel pump connector
- Poor contact in combination meter connector
- Poor contact in ECM connector
- Poor contact in coupling connector (i3, B22, B97 and R57)

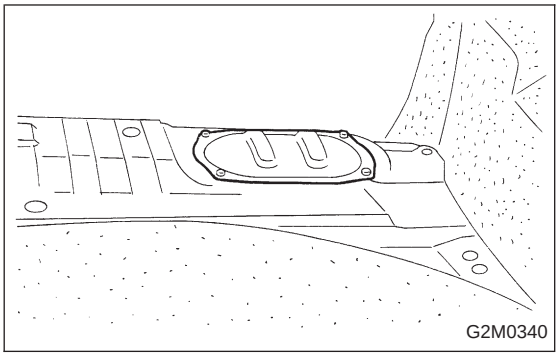

11AZ4	CHECK HARNESS BETWEEN ECM, COMBINATION METER AND FUEL PUMP CONNECTOR.

1) Turn ignition switch to OFF.
2) Remove fuel pump access hole lid located on the right rear of luggage compartment floor.

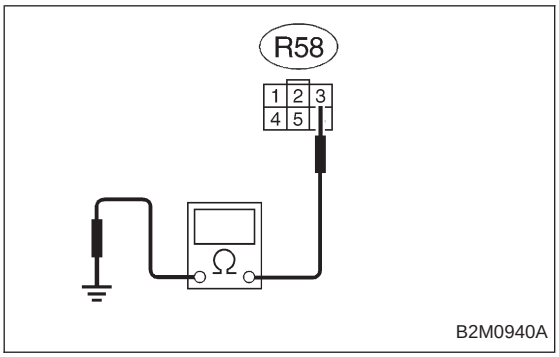

3) Disconnect connector from fuel pump.
4) Measure resistance of harness between fuel pump connector and chassis ground.

CHECK : ***Connector & terminal (R58) No. 3 — Chassis ground: Is the resistance less than 10 Ω?***

YES : Go to next step 5).

NO : Go to step **11AZ5**.

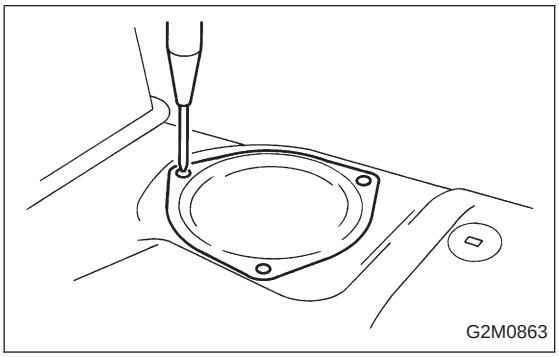

5) Remove service hole cover located on the left rear of luggage compartment floor.

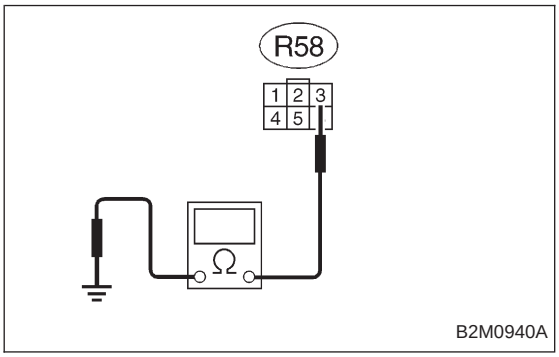

6) Disconnect connector from fuel sub meter unit.
7) Measure resistance of harness between fuel pump connector and chassis ground.

CHECK : ***Connector & terminal (R58) No. 3 — Chassis ground: Is the resistance less than 10 Ω?***

YES : Repair ground short circuit in harness between fuel pump and fuel sub meter unit connector.

NO : Go to next step 8).

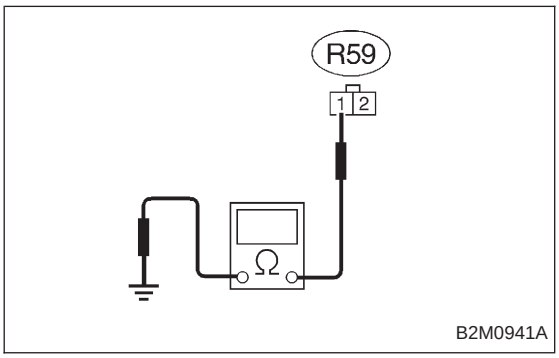

8) Separate fuel tank cord connector (R57) and rear wiring harness connector (R15).
9) Measure resistance of harness between fuel sub meter unit connector and chassis ground.

CHECK : ***Connector & terminal (R59) No. 1 — Chassis ground: Is the resistance less than 10 Ω?***

YES : Repair ground short circuit in fuel tank cord.

NO : Go to next step 10).

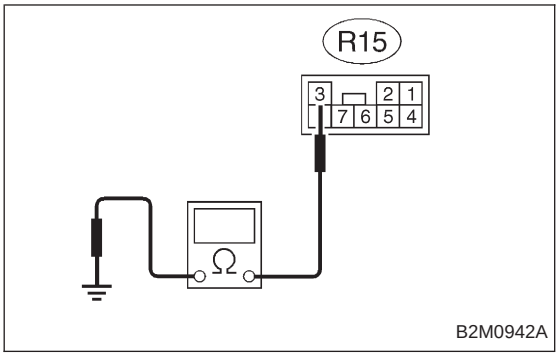

10) Separate rear wiring harness connector (R1) and bulkhead wiring harness connector (B97).
11) Measure resistance of harness between rear wiring harness connector and chassis ground.

CHECK : ***Connector & terminal (R15) No. 3 — Chassis ground: Is the resistance less than 10 Ω?***

YES : Repair ground short circuit in rear wiring harness.

NO : Go to next step 12).

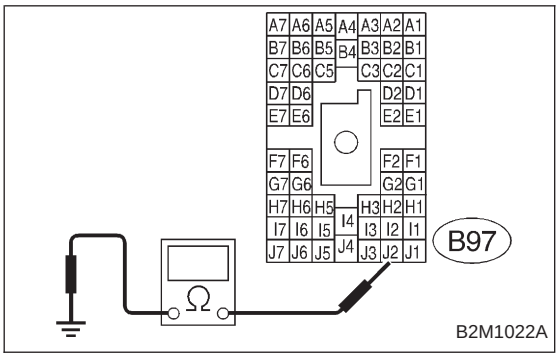

12) Measure resistance of harness between bulkhead wiring connector and chassis ground.

CHECK : ***Connector & terminal (B97) No. J2 — Chassis ground: Is the resistance less than 10 Ω?***

YES : Go to next step 13).

NO : Repair ground short circuit in harness between S.M.J. and ECM connector.

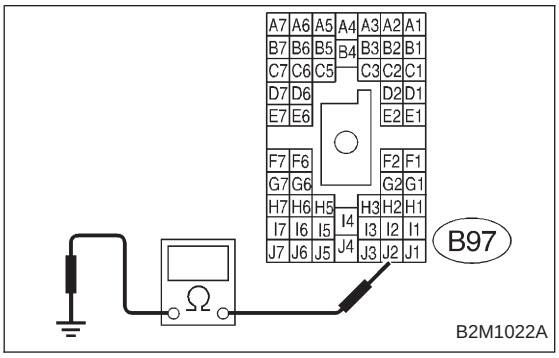

13) Separate bulkhead wiring harness connector (B38) and instrument panel wiring harness connector (i3).
14) Measure resistance of harness between bulkhead wiring harness connector and chassis ground.

CHECK : ***Connector & terminal (B97) No. J2 — Chassis ground: Is the resistance less than 10 Ω?***

YES : Repair ground short circuit in bulkhead wiring harness.

NO : Repair ground short circuit in instrument panel wiring harness.

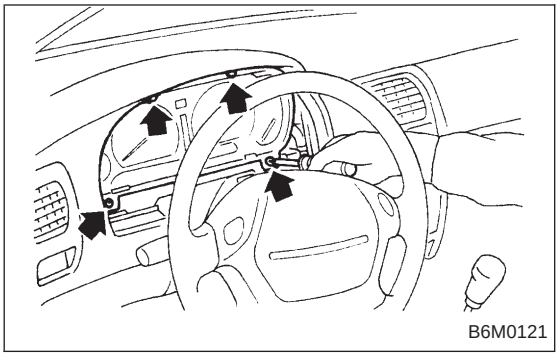

11AZ5	CHECK HARNESS BETWEEN COMBINATION METER AND FUEL PUMP CONNECTOR.

1) Connect connector to fuel pump.
2) Pull out combination meter from instrument panel. <Ref. to 6-2 [W13A1].>
3) Disconnect connector from combination meter.

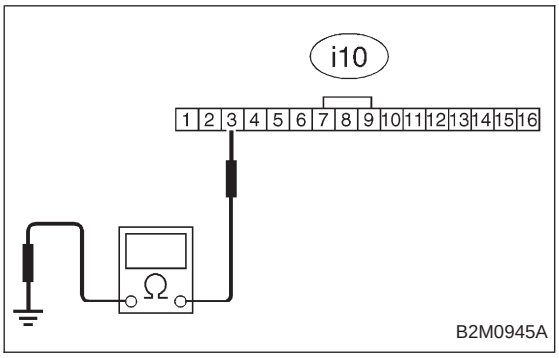

4) Measure resistance of harness between combination meter connector and chassis ground.

CHECK : ***Connector & terminal (i10) No. 3 — Chassis ground: Is the resistance less than 200 Ω?***

YES : Go to step **11AZ6**.

NO : Repair harness and connector.

NOTE:
In this case, repair the following:
- Open circuit in harness between combination meter connector and junction A on rear wiring harness
- Poor contact in coupling connectors (i3 and B97)

11AZ6	CHECK COMBINATION METER.

1) Disconnect speedometer cable from combination meter and remove combination meter.

CHECK : ***Is the fuel meter installation screw tightened securely?***

YES : Go to next step 2).

NO : Tighten fuel meter installation screw securely.

2) Remove printed circuit plate assembly from combination meter assembly.

CHECK : ***Is there flaw or burning on printed circuit plate assembly?***

YES : Replace printed circuit plate assembly.

NO : Replace fuel meter assembly.

OBD (FB1)

P0463 <FLVL_HI>

B2M1103

BA: DTC P0463 — FUEL LEVEL SENSOR CIRCUIT HIGH INPUT —

DTC DETECTING CONDITION:

- Two consecutive driving cycles with fault

WIRING DIAGRAM:

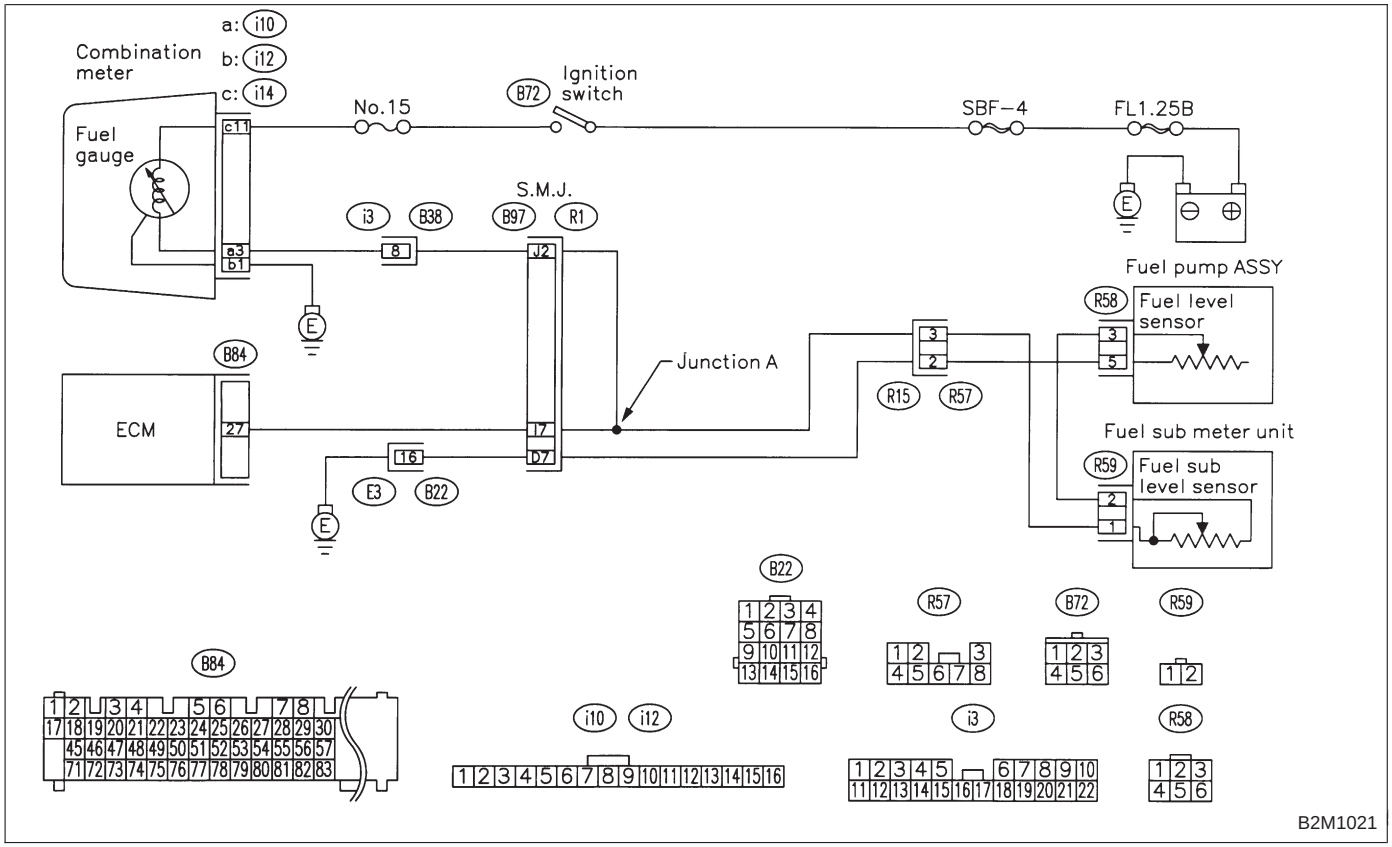

B2M1021

CAUTION:
After repair or replacement of faulty parts, conduct CLEAR MEMORY and INSPECTION MODES.
<Ref. to 2-7 [T3D0] and [T3E0].>

11BA1	CHECK SPEEDOMETER AND TACHOMETER OPERATION IN COMBINATION METER.

CHECK : ***Does speedometer and tachometer operate normally?***

YES : Go to step **11BA3**.

NO : Go to step **11BA2**.

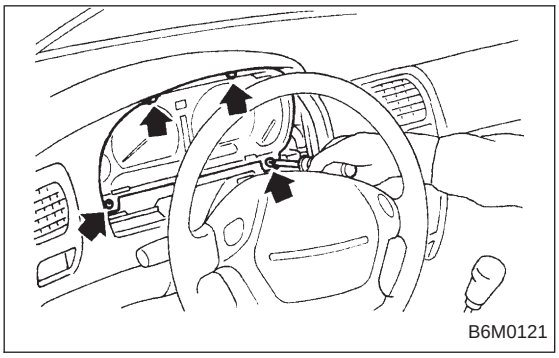

11BA2	CHECK GROUND CIRCUIT OF COMBINATION METER.

1) Turn ignition switch to OFF.
2) Pull out combination meter from instrument panel. <Ref. to 6-2 [W13A1].>
3) Disconnect connector from combination meter.

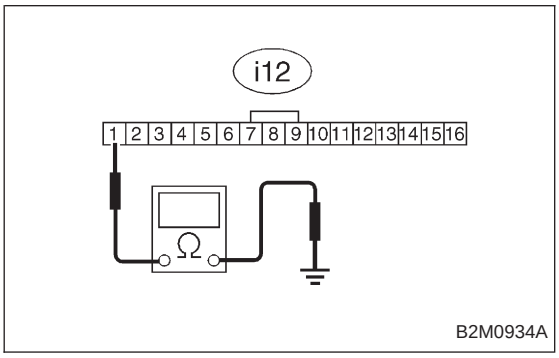

4) Measure resistance of harness between combination meter connector and chassis ground.

CHECK : ***Connector & terminal (i12) No. 1 — Chassis ground: Is resistance less than 5 Ω?***

YES : Repair or replace combination meter.

NO : Repair harness and connector.

NOTE:
In this case, repair the following:
- Open circuit in harness between combination meter connector and grounding terminal
- Poor contact in combination meter connector
- Poor contact in grounding terminal

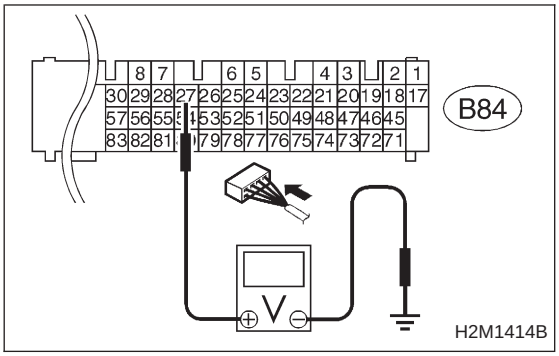

11BA3	CHECK INPUT SIGNAL FOR ECM. (USING VOLTAGE METER AND SUBARU SELECT MONITOR.)

1) Turn ignition switch to ON. (Engine OFF)
2) Measure voltage between ECM connector and chassis ground.

CHECK : ***Connector & terminal (B84) No. 27 (+) — Chassis ground (−): Is the voltage more than 4.75 V?***

YES : Go to step **11BA4**.

NO : Even if MIL lights up, the circuit has returned to a normal condition at this time. A temporary poor contact of the connector may be the cause.

NOTE:
In this case, repair the following:
- Poor contact in fuel pump connector
- Poor contact in combination meter connector
- Poor contact in ECM connector
- Poor contact in coupling connector (i3, B22, B97 and R57)

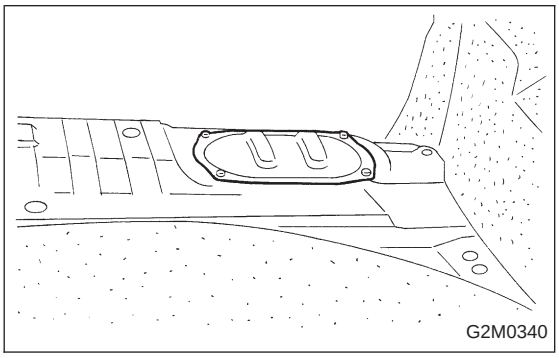

11BA4	CHECK FUEL LEVEL SENSOR.

1) Turn ignition switch to OFF.
2) Remove fuel pump access hole lid located on the right rear of luggage compartment floor.

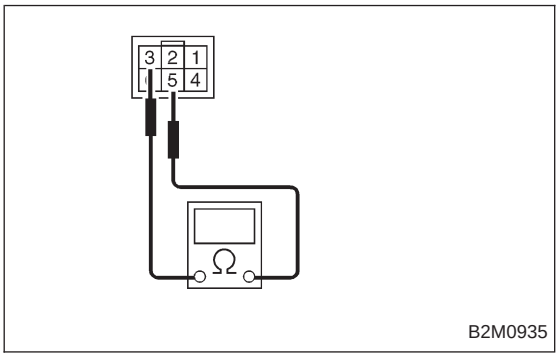

3) Disconnect connector from fuel pump.
4) Measure resistance between connector terminals of fuel pump.

CHECK : ***Terminals No. 3 — No. 5: Is the resistance less than 100 Ω?***

YES : Go to step **11BA5**.

NO : Replace fuel sending unit.

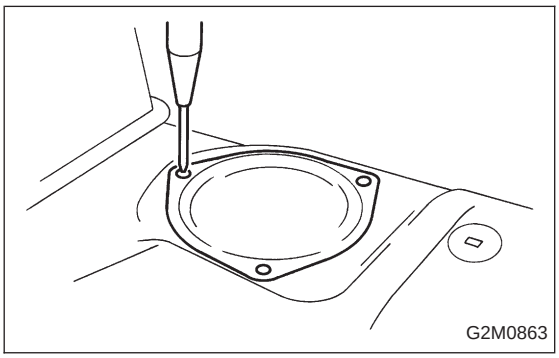

11BA5	CHECK FUEL SUB LEVEL SENSOR.

1) Remove service hole cover located on the left rear of luggage compartment floor.

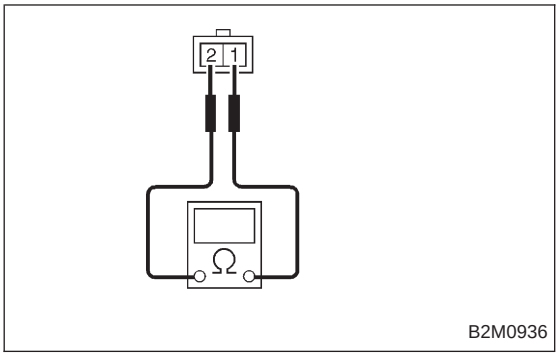

2) Disconnect connector from fuel sub meter unit.
3) Measure resistance between connector terminals of fuel sub meter unit.

CHECK : ***Terminals***
No. 1 — No. 2:
Is the resistance less than 100 Ω?

YES : Go to step **11BA6**.

NO : Replace fuel sub meter unit.

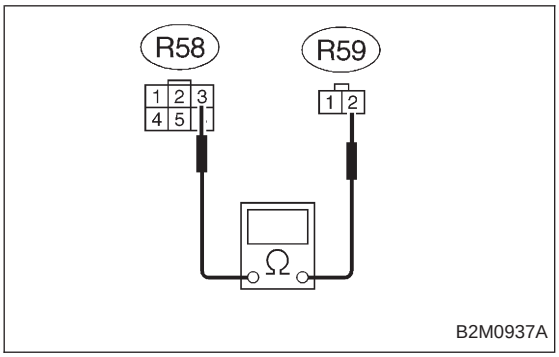

11BA6	CHECK HARNESS BETWEEN FUEL PUMP AND FUEL SUB METER UNIT CONNECTOR.

Measure resistance of harness between fuel pump and fuel sub meter unit connector.

CHECK : ***Connector & terminal***
(R58) No. 3 — (R59) No. 2:
Is the resistance less than 1 Ω?

YES : Go to step **11BA7**.

NO : Repair open circuit in harness between fuel pump and fuel sub meter unit connector.

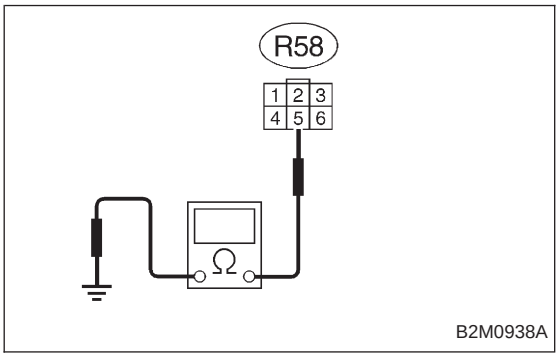

11BA7	CHECK GROUND CIRCUIT OF FUEL LEVEL SENSOR.

Measure resistance of harness between fuel pump connector and chassis ground.

CHECK : ***Connector & terminal***
(R58) No. 5 — Chassis ground:
Is the resistance less than 5 Ω?

YES : Go to step **11BA8**.

NO : Repair harness and connector.

NOTE:
In this case, repair the following:
- Open circuit in harness between fuel pump connector and chassis grounding terminal
- Poor contact in fuel pump connector
- Poor contact in coupling connectors (R57, B97 and B22)

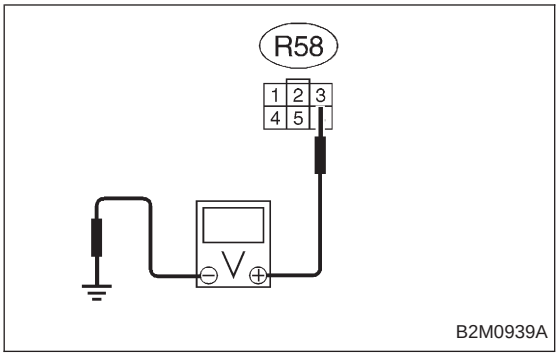

11BA8	CHECK HARNESS BETWEEN ECM AND FUEL PUMP CONNECTOR.

1) Connect connector to fuel sub meter unit.
2) Turn ignition switch to ON.
3) Measure voltage between fuel pump connector and chassis ground.

CHECK : ***Connector & terminal (R58) No. 3 (+) — Chassis ground (−): Is the voltage less than 1 V?***

YES : Repair harness and connector.

NOTE:
In this case, repair the following:
- Open circuit in harness between fuel pump connector and junction A on rear wiring harness
- Poor contact in fuel sub meter unit connector
- Poor contact in fuel pump connector
- Poor contact in coupling connector (R57)

NO : Go to next step 4).

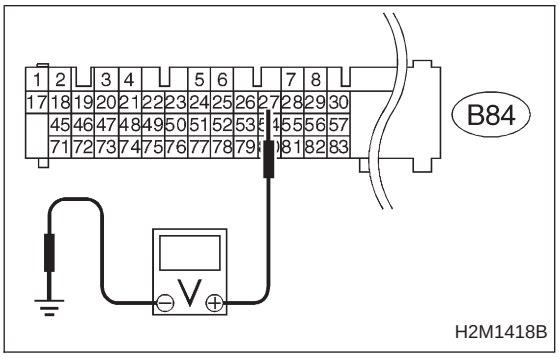

4) Turn ignition switch to OFF.
5) Disconnect connector from ECM.
6) Turn ignition switch to ON.
7) Measure voltage between ECM connector and chassis ground.

CHECK : ***Connector & terminal (B84) No. 27 (+) — Chassis ground: Is the voltage less than 1 V?***

YES : Repair harness and connector.

NOTE:
In this case, repair the following:
- Open circuit in harness between ECM connector and junction A on rear wiring harness
- Poor contact in coupling connector (B97)

NO : Repair connector.

NOTE:
In this case, repair the following:
- Poor contact in fuel pump connector
- Poor contact in fuel sub meter unit
- Poor contact in ECM connector

OBD	(FB1)
P0500	<VSP>

OBD0340

BB: DTC P0500 — VEHICLE SPEED SENSOR MALFUNCTION —

WIRING DIAGRAM:

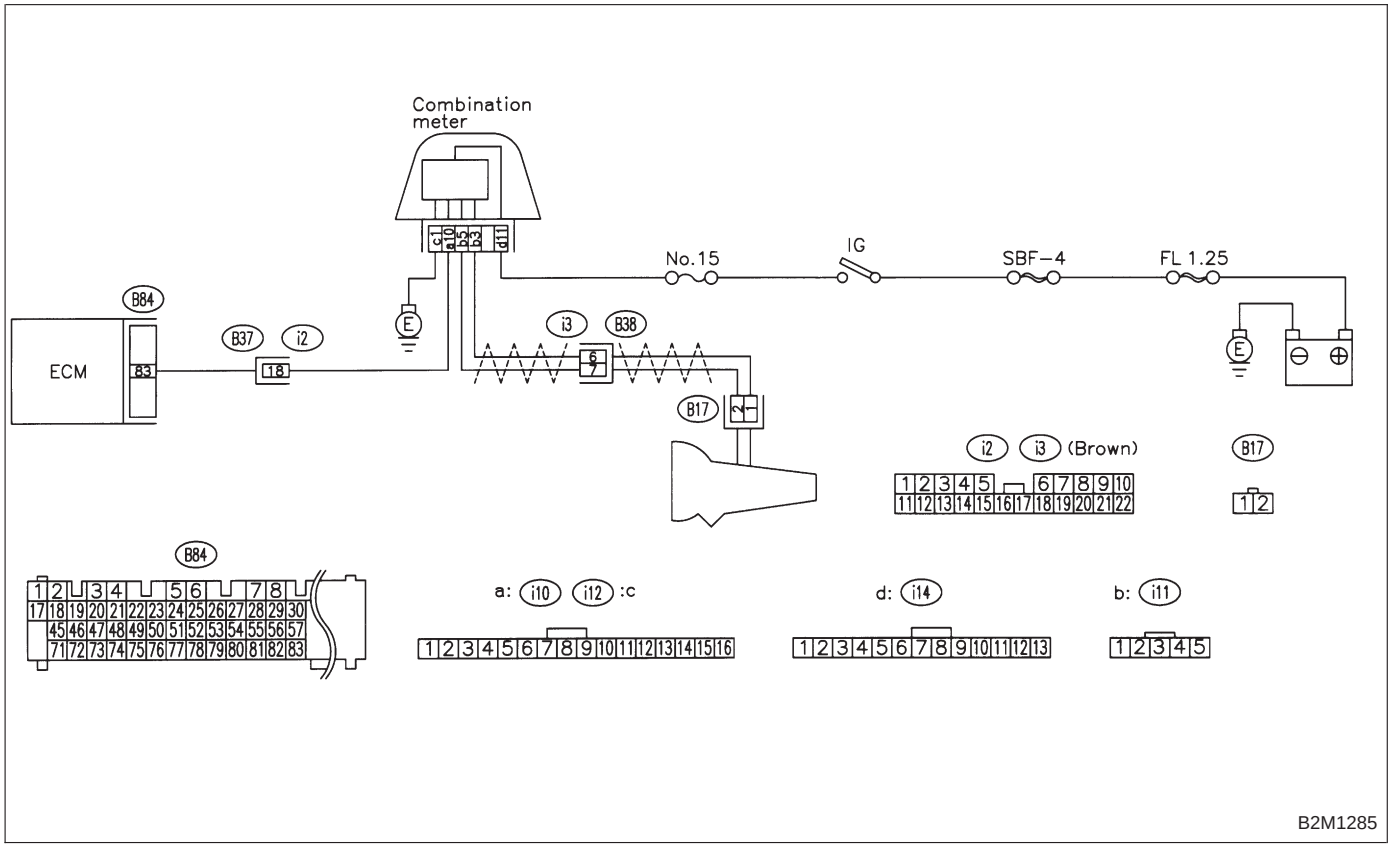

NOTE:
Check vehicle speed sensor 2 circuit.
<Ref. to 2-7 [T10BB0].>

OBD	(FB1)
P0505	<ISC>

OBD0358

BC: DTC P0505 — IDLE CONTROL SYSTEM MALFUNCTION —

WIRING DIAGRAM:

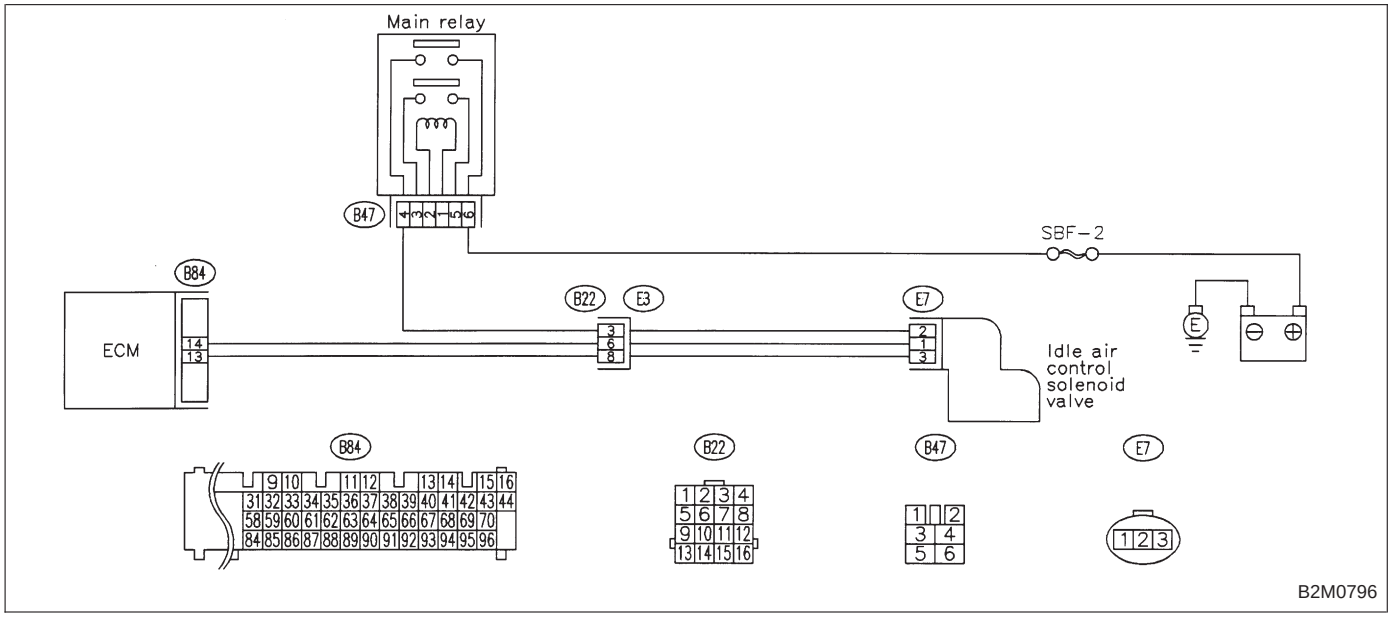

NOTE:
Check idle air control solenoid valve circuit.
<Ref. to 2-7 [T10BC0].>

OBD (FB1)

P0506 <ISC_RLOW>

B2M1104

BD: DTC P0506
— IDLE CONTROL SYSTEM RPM LOWER THAN EXPECTED —

WIRING DIAGRAM:

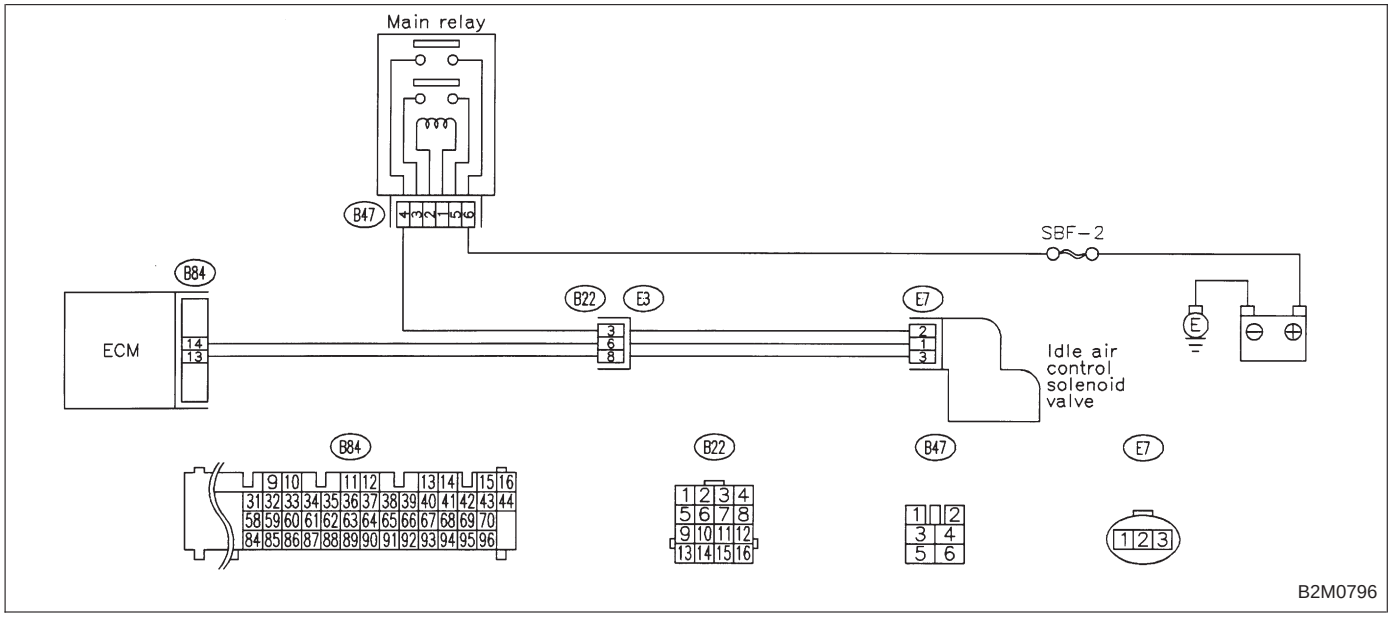

NOTE:
Check idle air control system.
<Ref. to 2-7 [T10BD0].>

OBD (FB1)

P0507 <ISC_RHI>

B2M1105

BE: DTC P0507 — IDLE CONTROL SYSTEM RPM HIGHER THAN EXPECTED —

WIRING DIAGRAM:

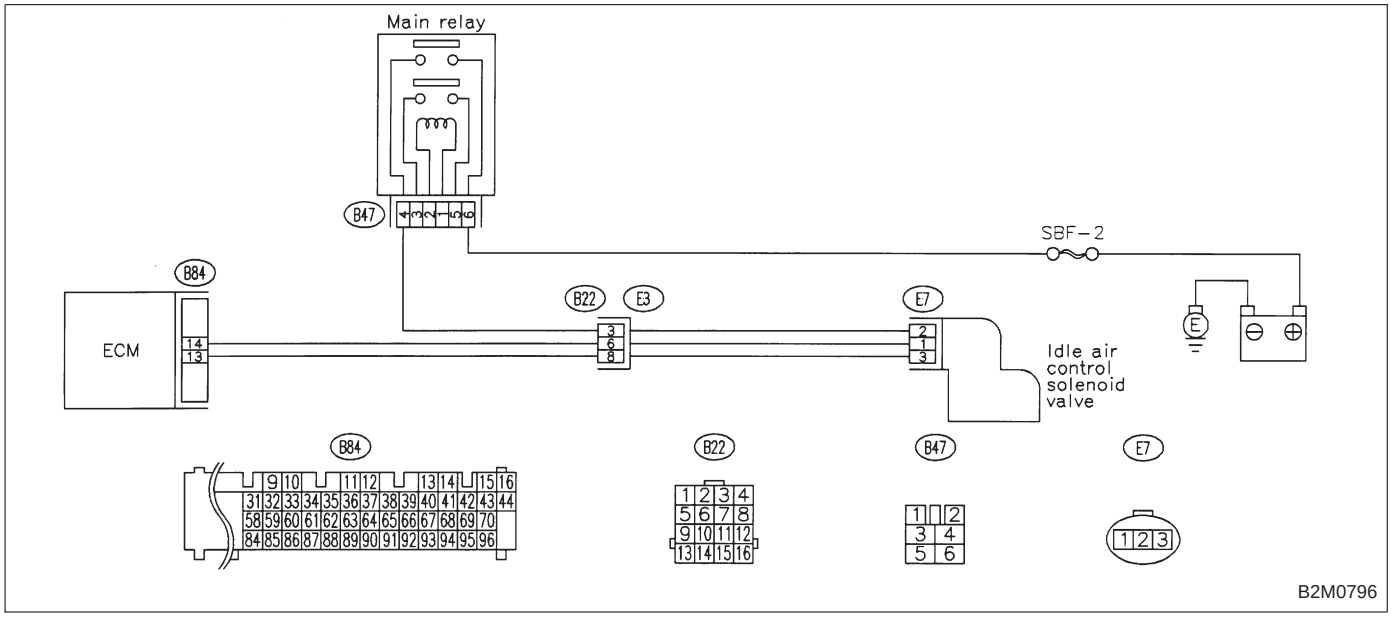

NOTE:
Check idle air control system.
<Ref. to 2-7 [T10BE0].>

BF: DTC P0600 — SERIAL COMMUNICATION LINK MALFUNCTION —

WIRING DIAGRAM:

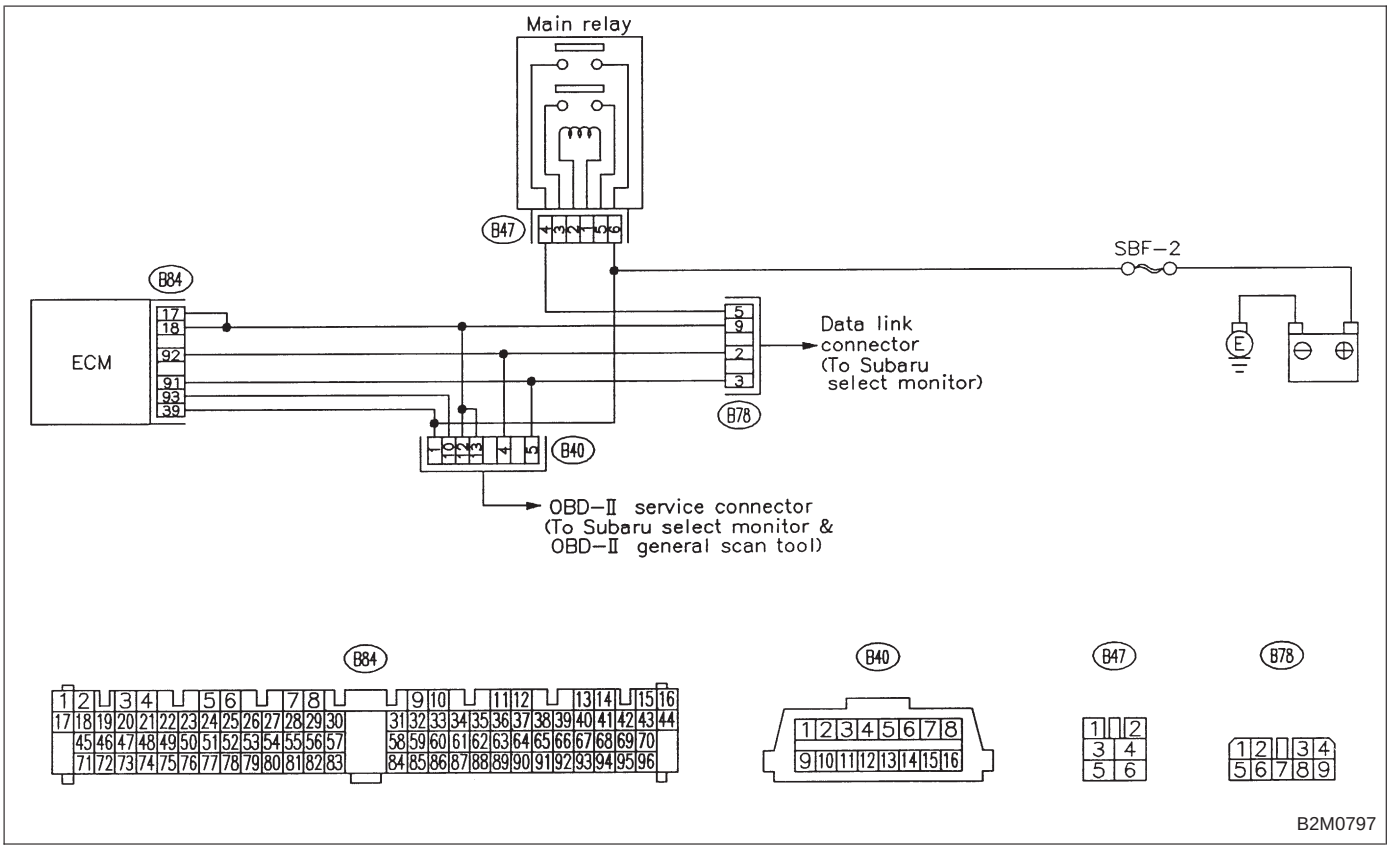

NOTE:
Check serial communication circuit.
<Ref. to 2-7 [T10BF0].>

OBD	(FB1)
P0601	<RAM>

OBD0376

BG: DTC P0601 — INTERNAL CONTROL MODULE MEMORY CHECK SUM ERROR —

WIRING DIAGRAM:

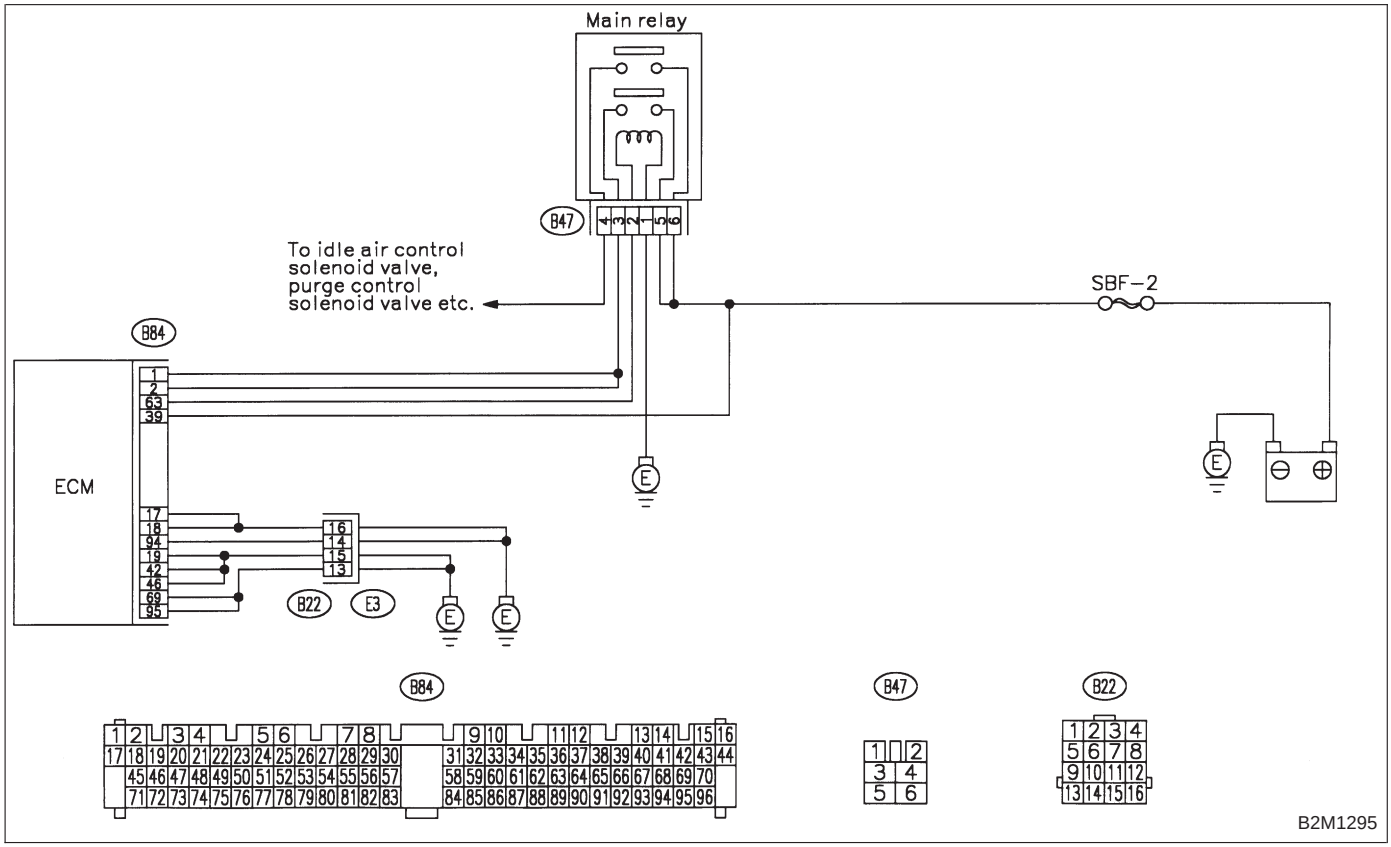

NOTE:
Check internal control module memory.
<Ref. to 2-7 [T10BG0].>

OBD (FB1)

P0703 <ATBRK>

B2M0655

BH: DTC P0703
— BRAKE SWITCH INPUT MALFUNCTION —

WIRING DIAGRAM:

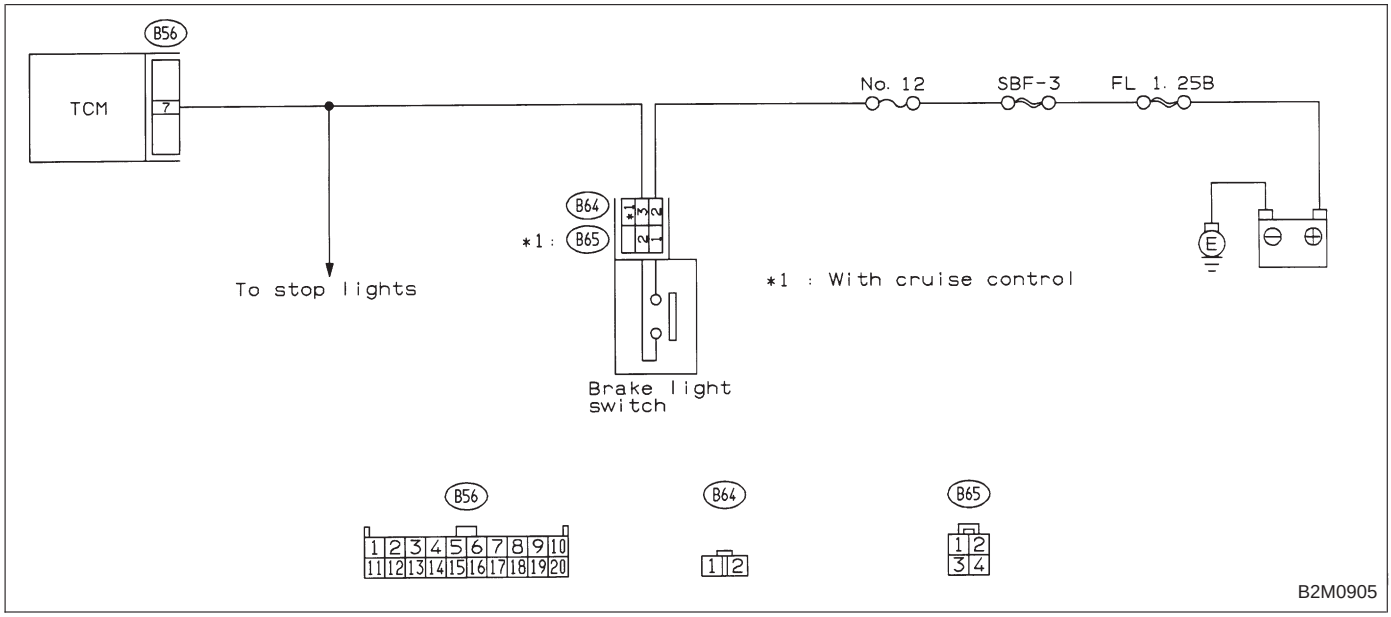

NOTE:
Check brake switch input signal circuit.
<Ref. to 2-7 [T10BH0].>

OBD (FB1)

P0705 <ATRNG>

B2M0656

BI: DTC P0705 — TRANSMISSION RANGE SENSOR CIRCUIT MALFUNCTION —

WIRING DIAGRAM:

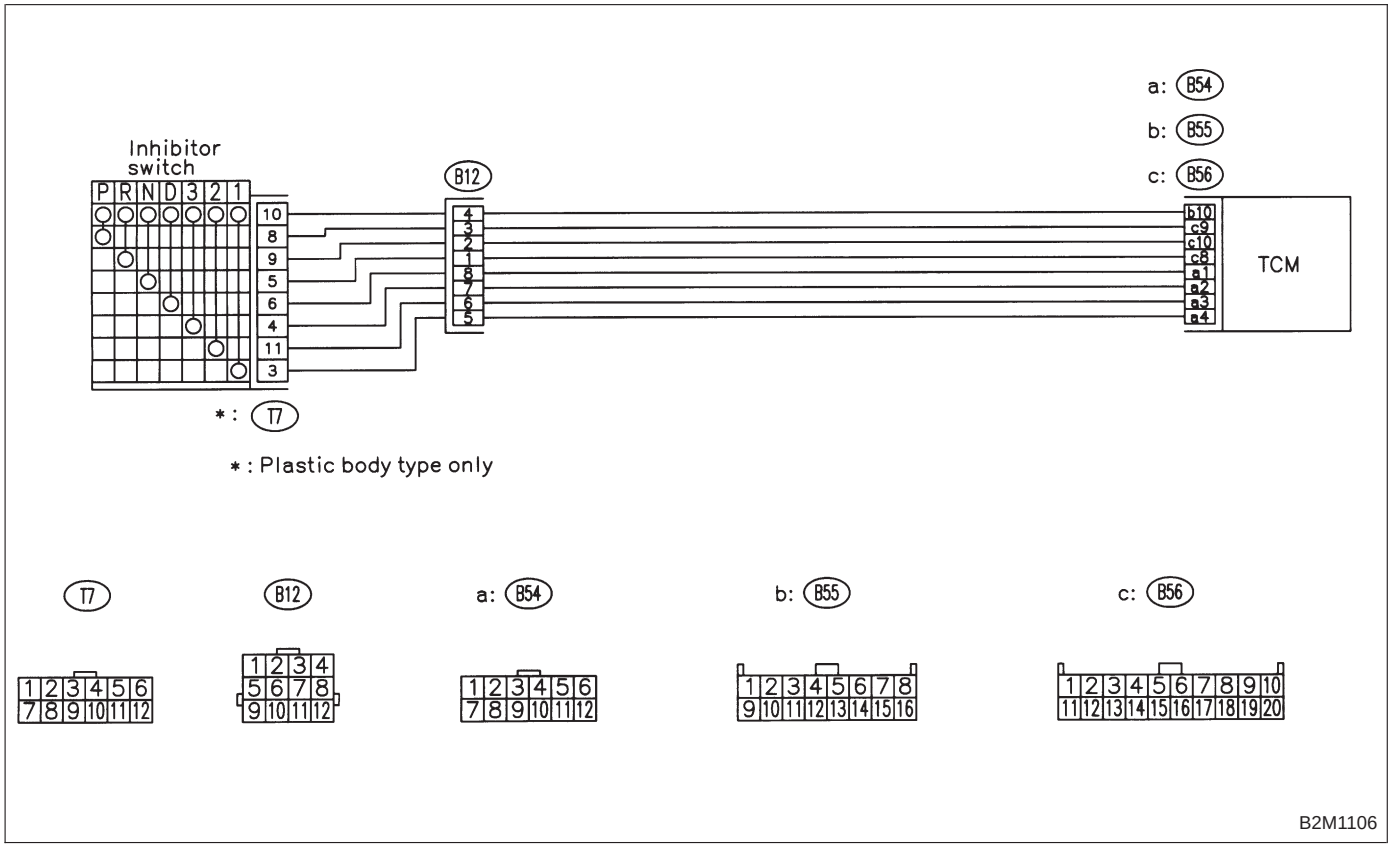

NOTE:
Check inhibitor switch circuit.
<Ref. to 2-7 [T10BI0].>

OBD	(FB1)
P0710	<ATF>

OBD0380

BJ: DTC P0710 — TRANSMISSION FLUID TEMPERATURE SENSOR CIRCUIT MALFUNCTION —

WIRING DIAGRAM:

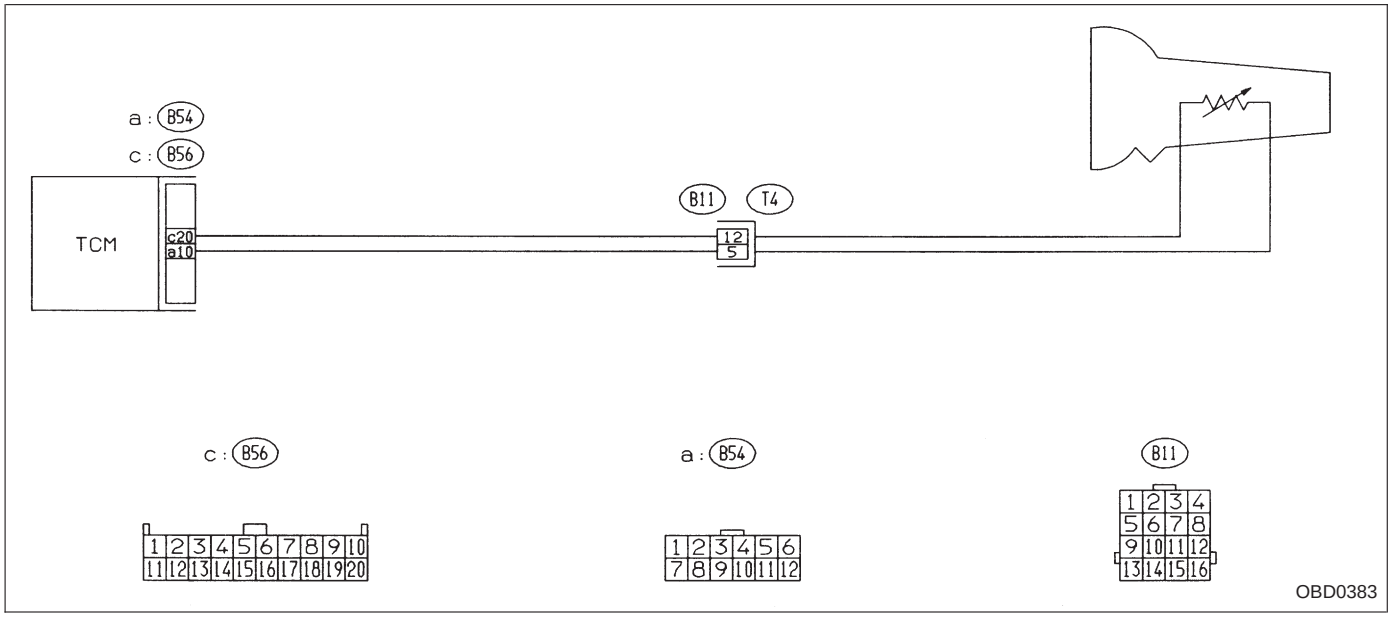

NOTE:
Check automatic transmission fluid temperature sensor circuit.
<Ref. to 2-7 [T10BJ0].>

OBD	(FB1)
P0720	<ATVSP>

OBD0392

BK: DTC P0720 — OUTPUT SPEED SENSOR (VEHICLE SPEED SENSOR 1) CIRCUIT MALFUNCTION —

WIRING DIAGRAM:

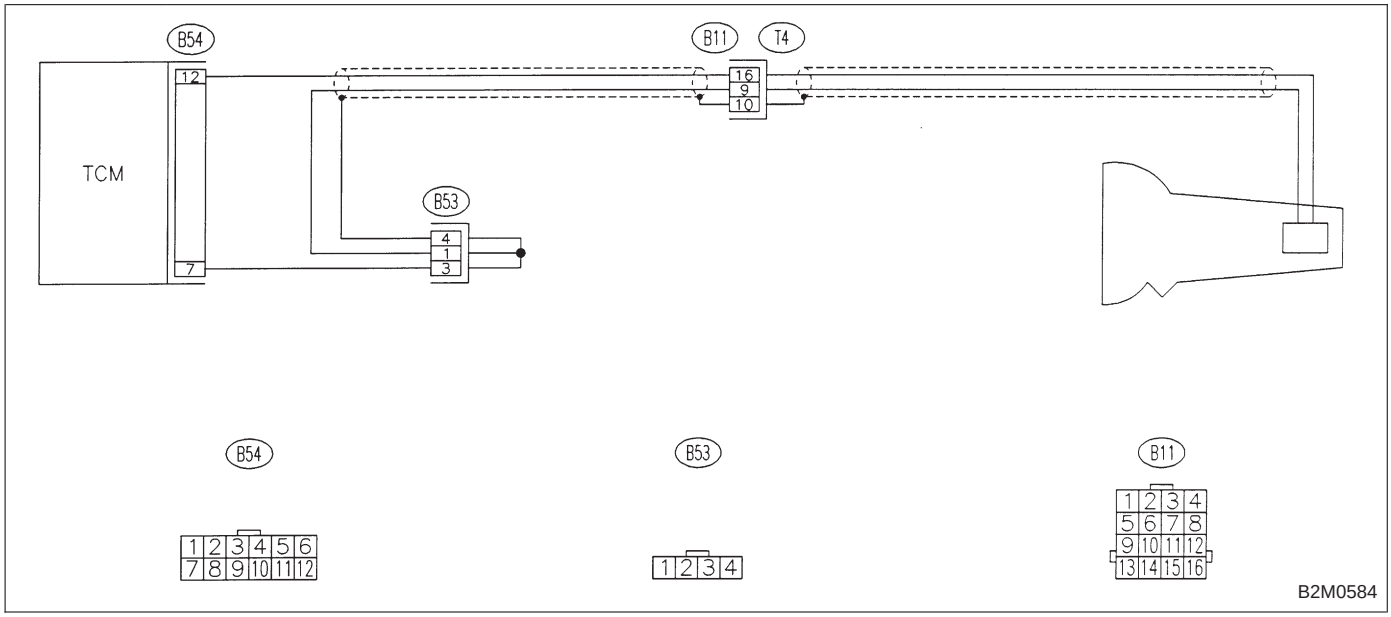

NOTE:
Check vehicle speed sensor 1 circuit.
<Ref. to 2-7 [T10BK0].>

OBD	(FB1)
P0725	<ATNE>

OBD0404

BL: DTC P0725 — ENGINE SPEED INPUT CIRCUIT MALFUNCTION —

WIRING DIAGRAM:

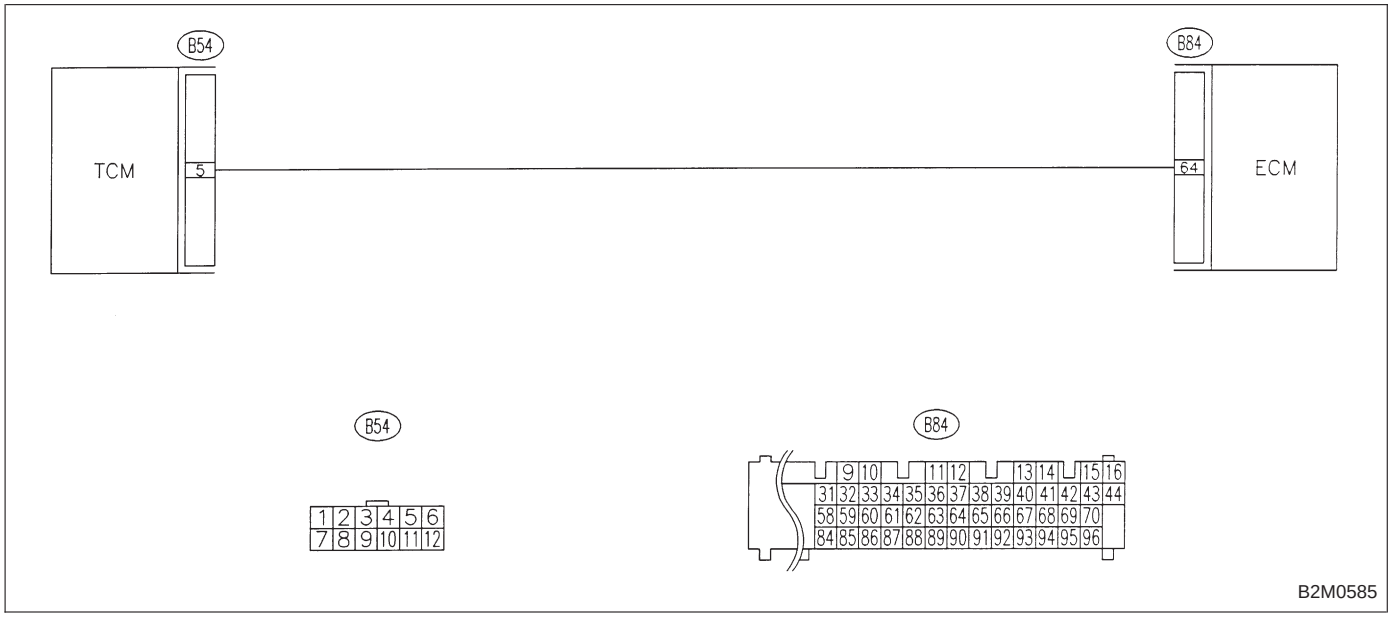

NOTE:
Check engine speed signal input circuit.
<Ref. to 2-7 [T10BL0].>

OBD (FB1)
P0731 <ATGR1>
B2M0657

BM: DTC P0731
— GEAR 1 INCORRECT RATIO (ATGR1) —

OBD (FB1)
P0732 <ATGR2>
B2M0658

BN: DTC P0732
— GEAR 2 INCORRECT RATIO (ATGR2) —

OBD (FB1)
P0733 <ATGR3>
B2M0659

BO: DTC P0733
— GEAR 3 INCORRECT RATIO (ATGR3) —

OBD (FB1)
P0734 <ATGR4>
B2M0660

BP: DTC P0734
— GEAR 4 INCORRECT RATIO (ATGR4) —

WIRING DIAGRAM:

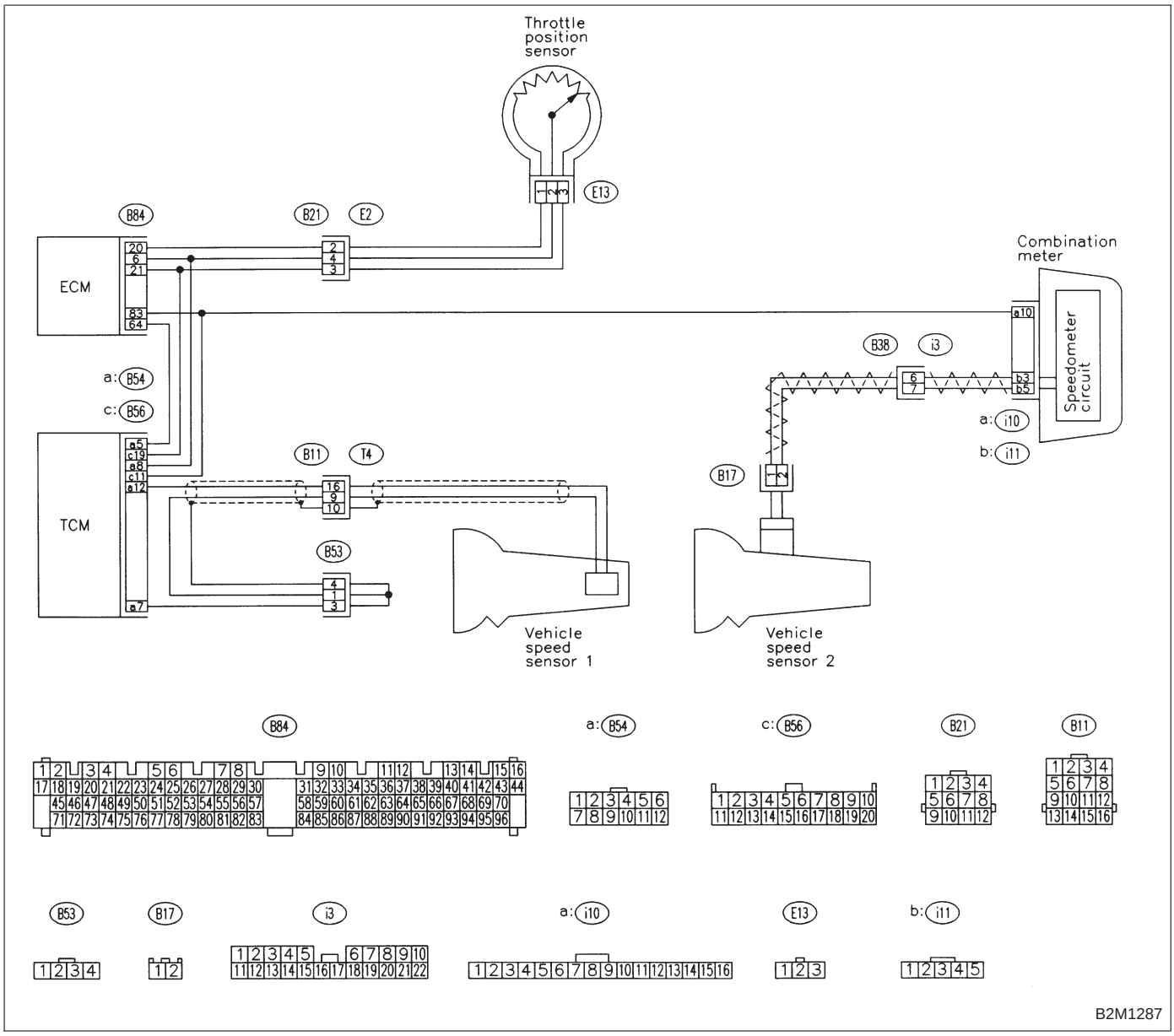

NOTE:
Check shift change control system.
<Ref. to 2-7 [T10BM0].>

OBD (FB1)

P0740 <ATLU_F>

B2M0661

BQ: DTC P0740 — TORQUE CONVERTER CLUTCH SYSTEM MALFUNCTION —

WIRING DIAGRAM:

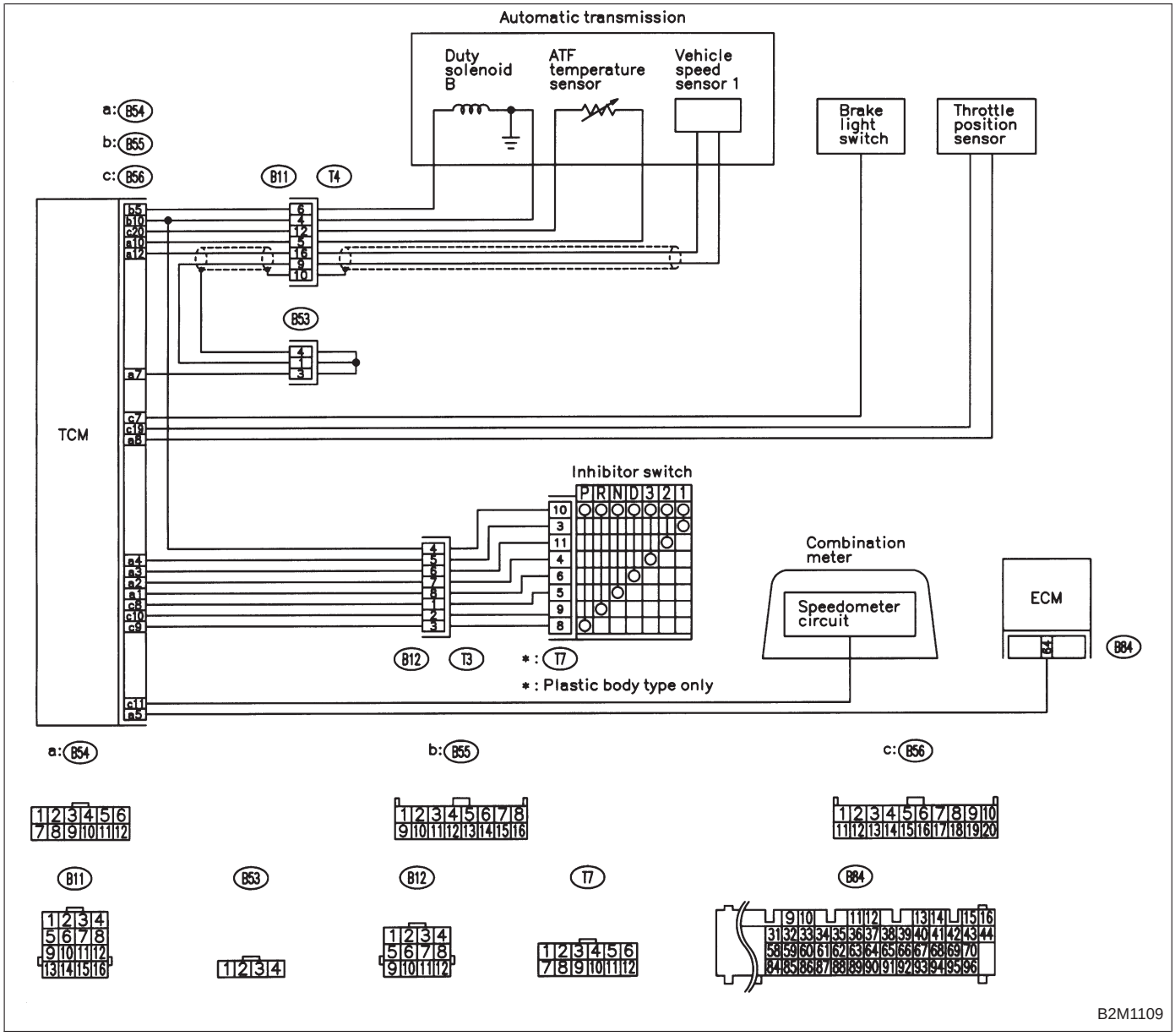

NOTE:
Check torque converter lock-up control system.
<Ref. to 2-7 [T10BQ0].>

OBD (FB1)

P0743 <ATLU>

B2M0662

BR: DTC P0743
— TORQUE CONVERTER CLUTCH SYSTEM (DUTY SOLENOID B) ELECTRICAL —

WIRING DIAGRAM:

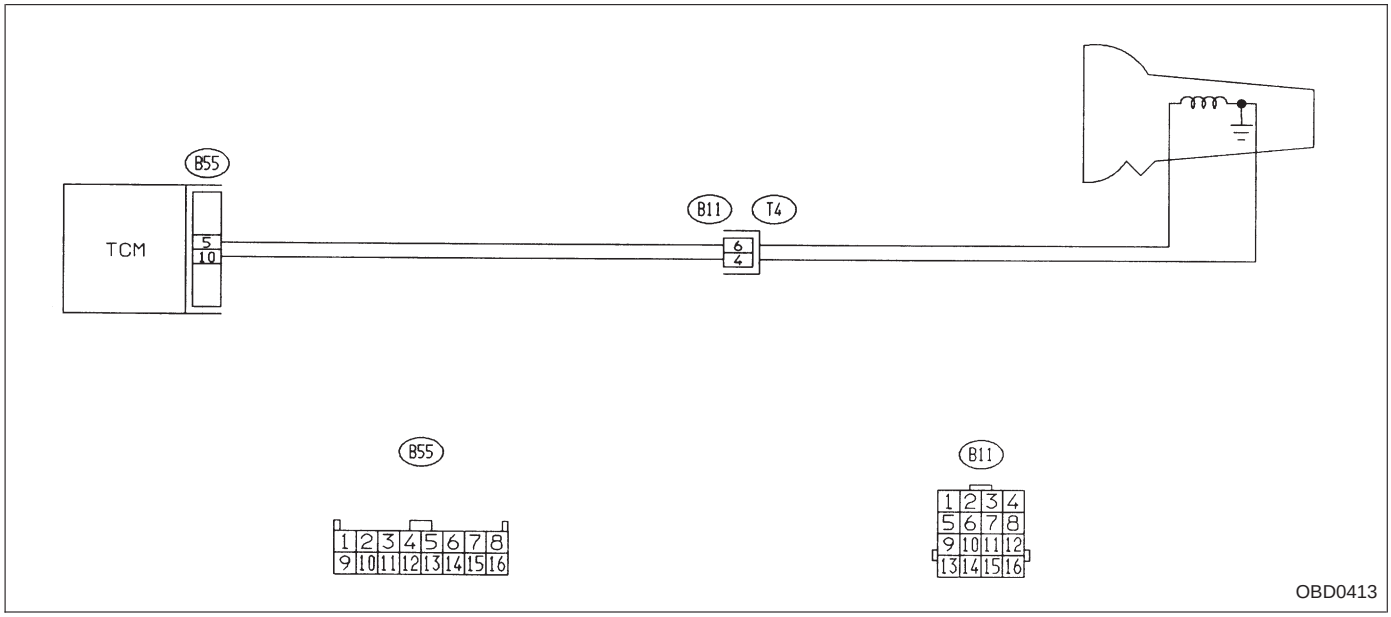

NOTE:
Check duty solenoid B circuit.
<Ref. to 2-7 [T10BR0].>

OBD (FB1)
P0748 <ATPL>
B2M0663

BS: DTC P0748
— PRESSURE CONTROL SOLENOID (DUTY SOLENOID A) ELECTRICAL —

WIRING DIAGRAM:

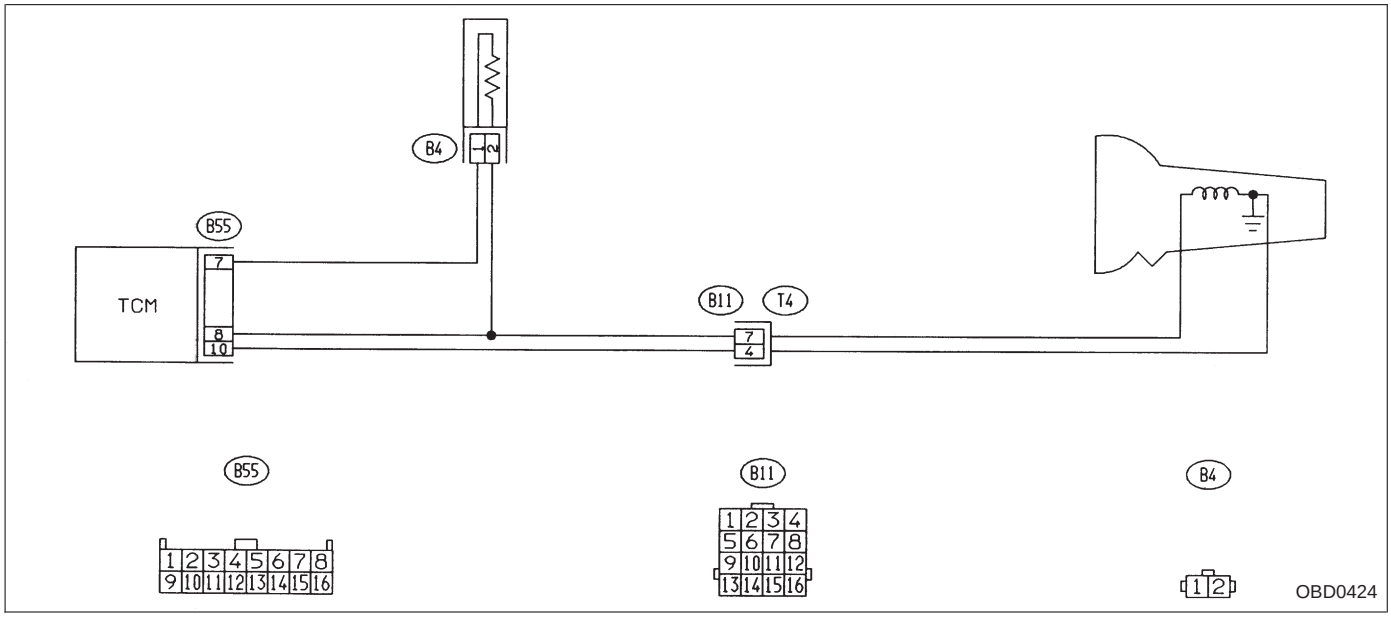

NOTE:
Check duty solenoid A circuit.
<Ref. to 2-7 [T10BS0].>

OBD (FB1)

P0753 <ATSFT1>

B2M0664

BT: DTC P0753 — SHIFT SOLENOID A (SHIFT SOLENOID 1) ELECTRICAL —

WIRING DIAGRAM:

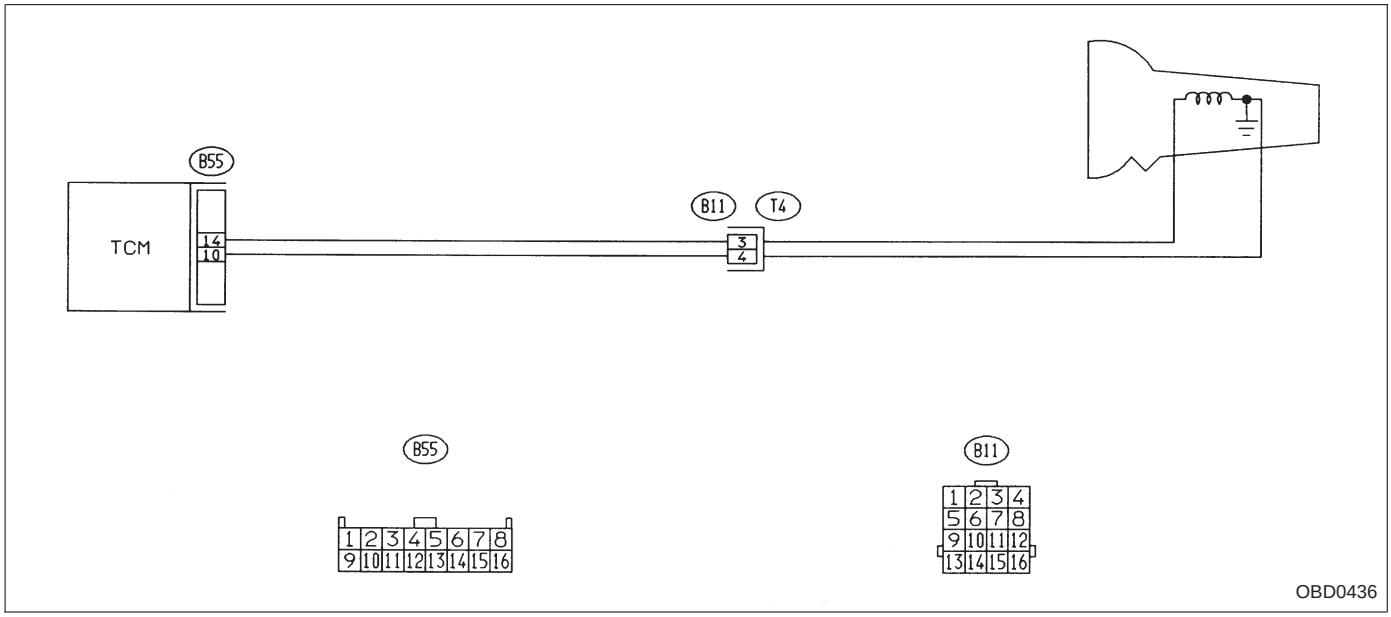

NOTE:
Check shift solenoid 1 circuit.
<Ref. to 2-7 [T10BT0].>

OBD (FB1)

P0758 <ATSFT2>

B2M0665

BU: DTC P0758
— SHIFT SOLENOID B (SHIFT SOLENOID 2) ELECTRICAL —

WIRING DIAGRAM:

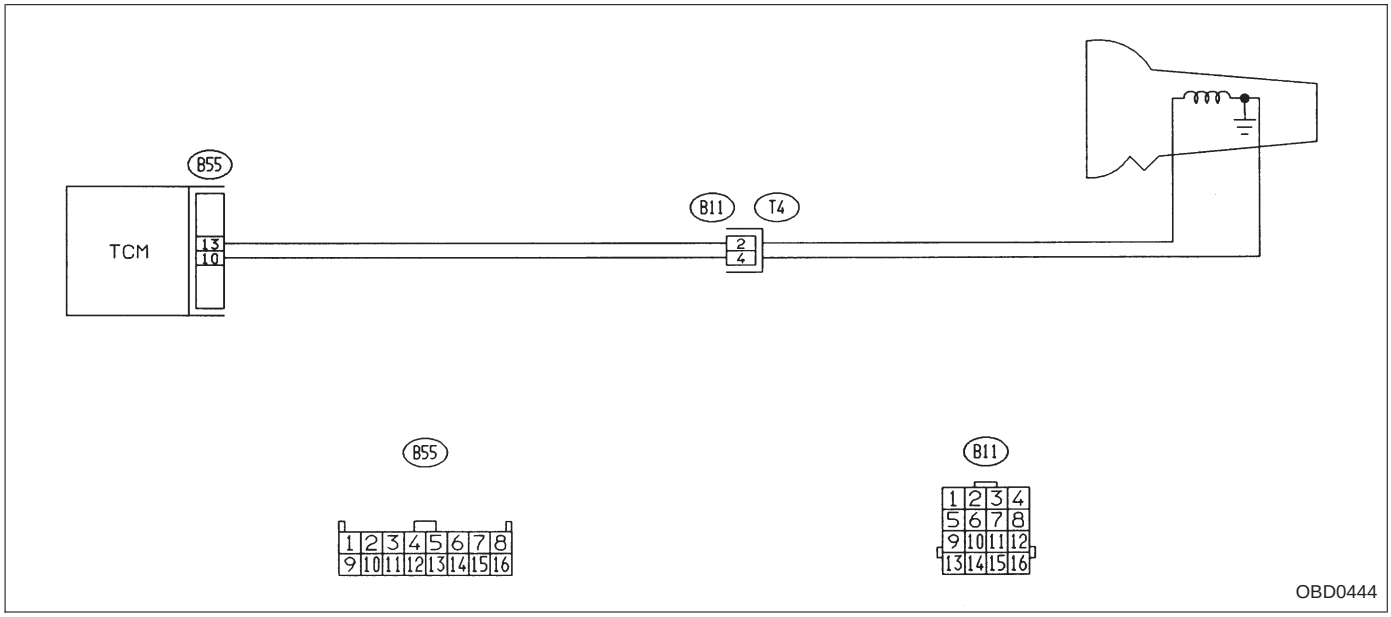

NOTE:
Check shift solenoid 2 circuit.
<Ref. to 2-7 [T10BU0].>

OBD (FB1)

P0760<ATOVR_F>

B2M0666

BV: DTC P0760 — SHIFT SOLENOID C (SHIFT SOLENOID 3) MALFUNCTION —

WIRING DIAGRAM:

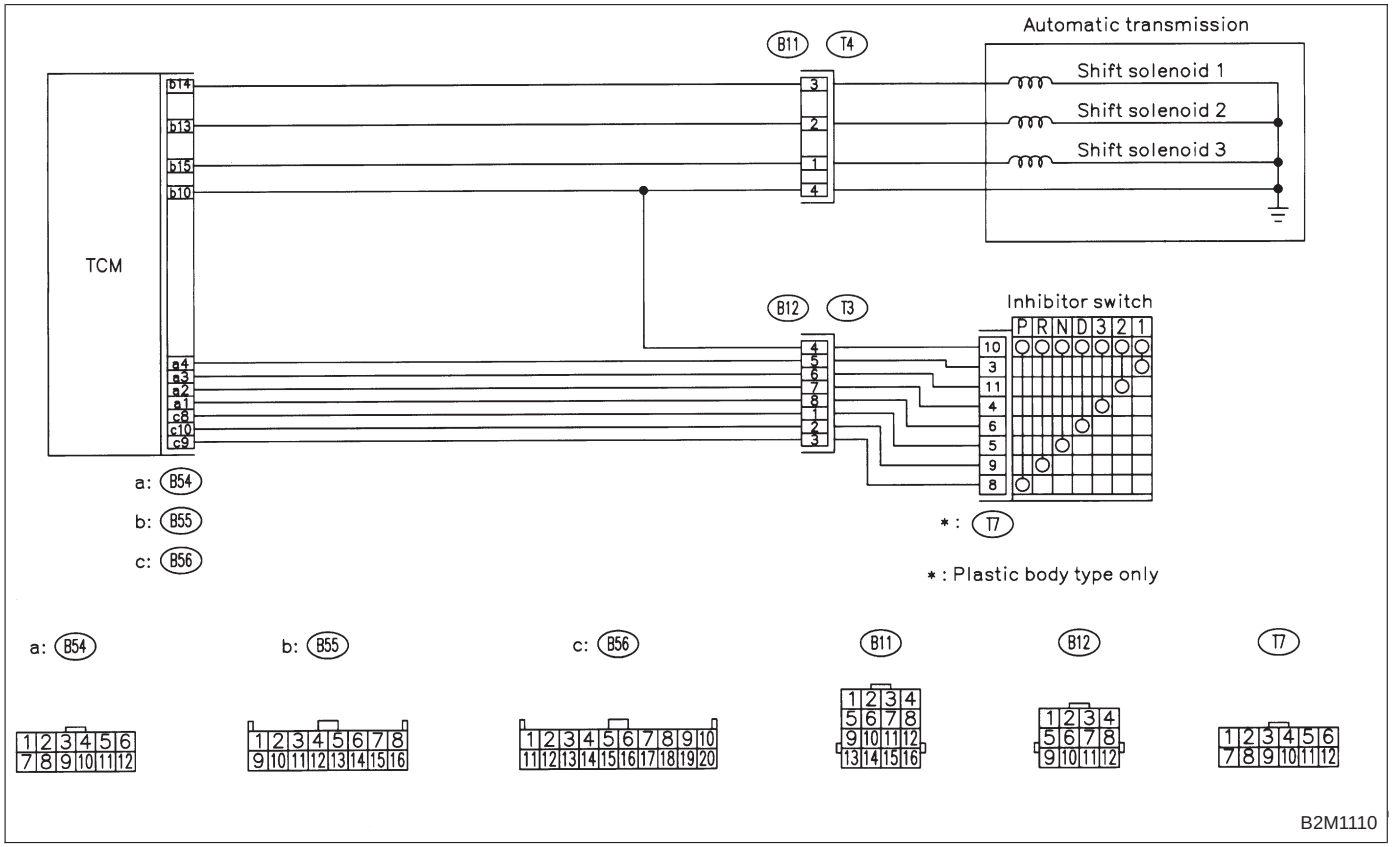

NOTE:
Check shift solenoid 3 control system.
<Ref. to 2-7 [T10BV0].>

OBD (FB1)

P0763 <ATOVR>

B2M0667

BW: DTC P0763 — SHIFT SOLENOID C (SHIFT SOLENOID 3) ELECTRICAL —

WIRING DIAGRAM:

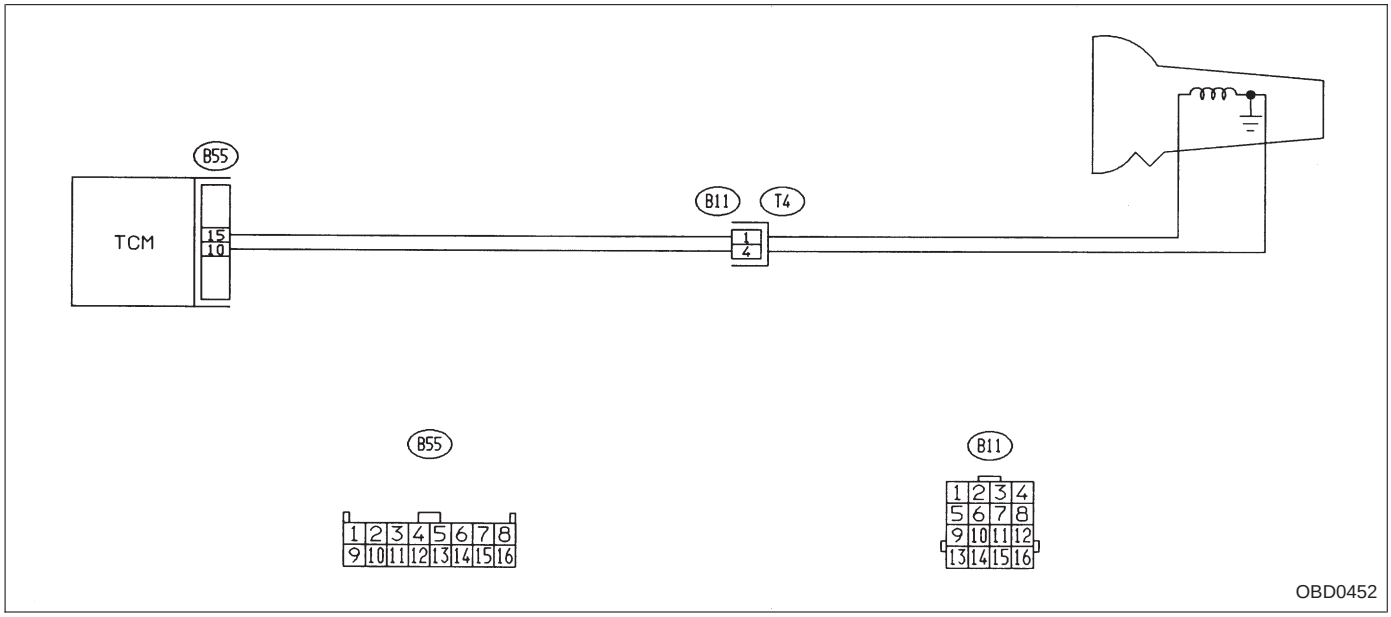

NOTE:
Check shift solenoid 3 circuit.
<Ref. to 2-7 [T10BW0].>

OBD (FB1)

P1100 <ST_SWOFF>

B2M1113

BX: DTC P1100
— STARTER SWITCH CIRCUIT LOW INPUT —

WIRING DIAGRAM:

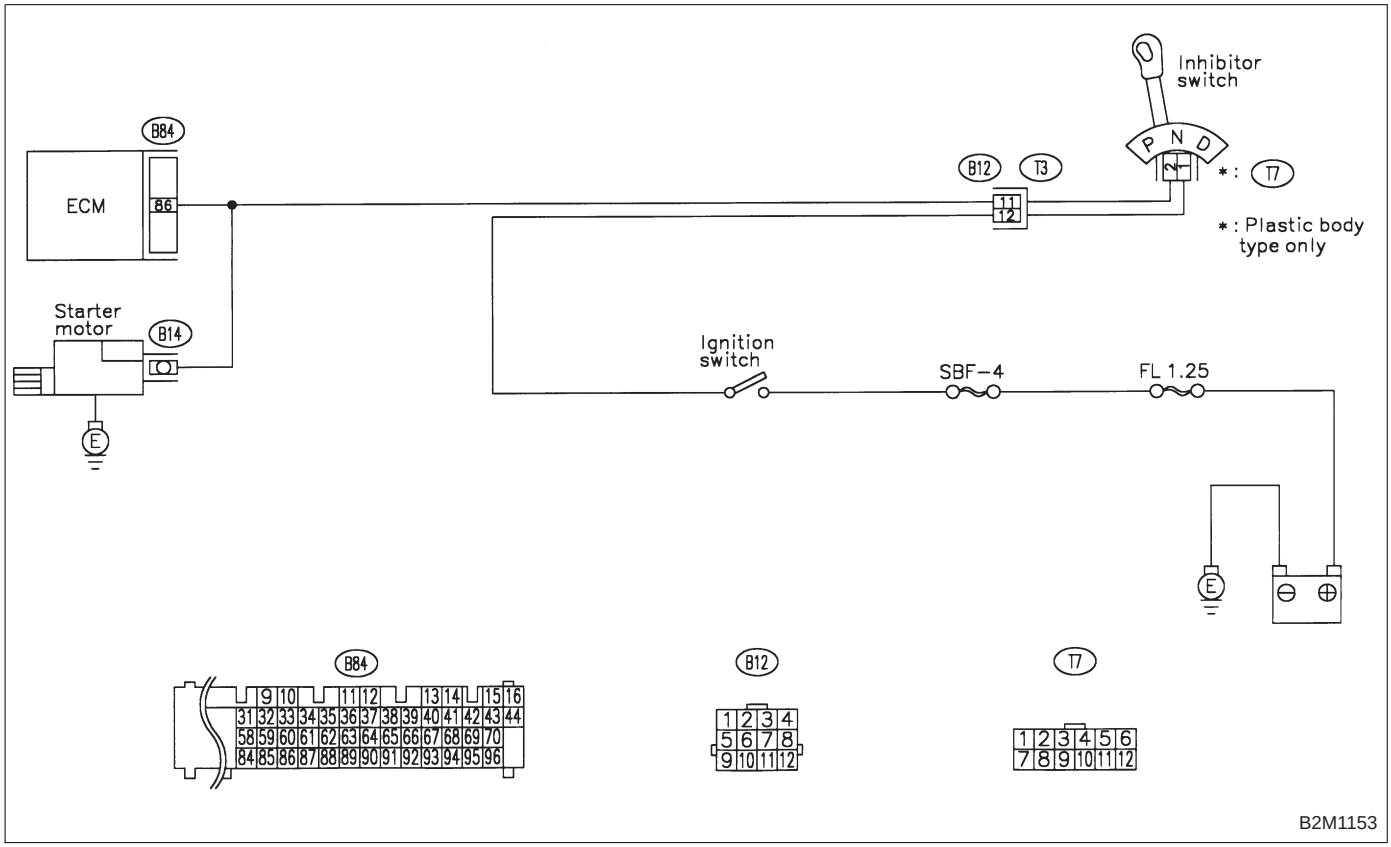

NOTE:
Check starter switch circuit.
<Ref. to 2-7 [T10BX0].>

OBD (FB1)

P1101 <N_SWOFF>

B2M1115

BY: DTC P1101 — NEUTRAL POSITION SWITCH CIRCUIT HIGH INPUT [AT VEHICLES] —

WIRING DIAGRAM:

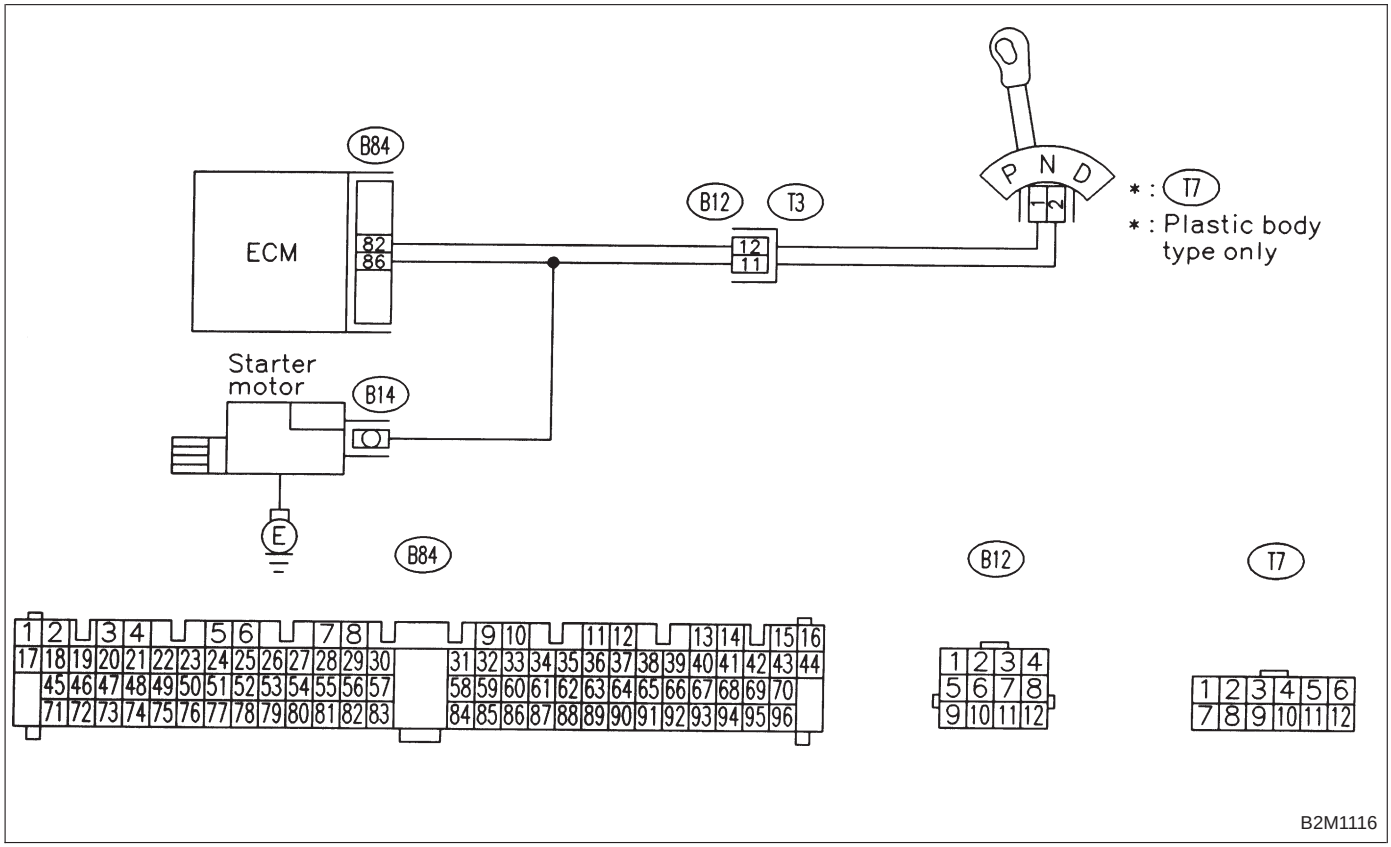

B2M1116

NOTE:
Check neutral position switch circuit.
<Ref. to 2-7 [T10BZ0].>

OBD	(FB1)
P1102	

OBD0481

BZ: DTC P1102 — PRESSURE SOURCES SWITCHING SOLENOID VALVE CIRCUIT LOW INPUT —

WIRING DIAGRAM:

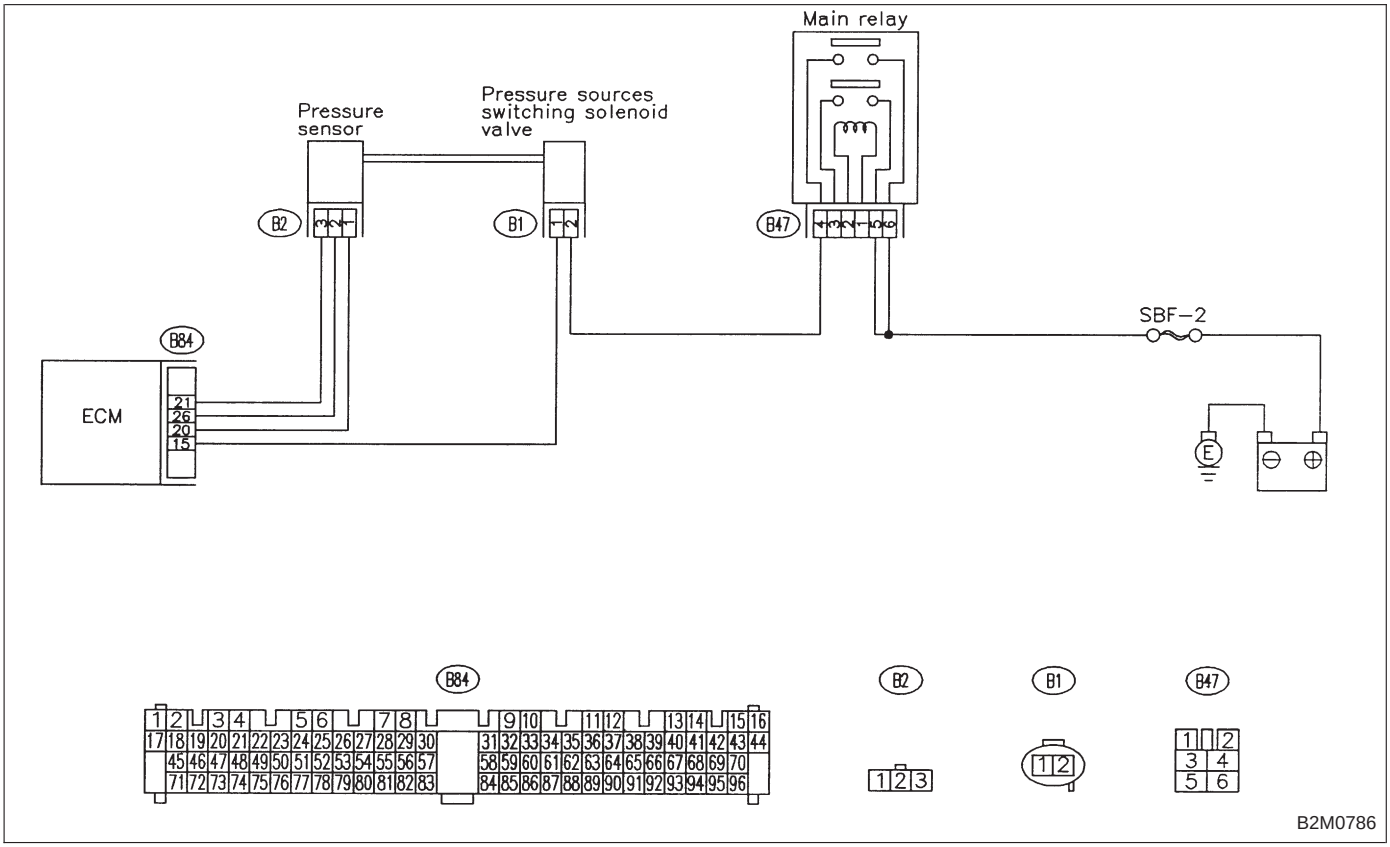

NOTE:
Check pressure sources switching solenoid valve circuit.
<Ref. to 2-7 [T10CA0].>

OBD	(FB1)
P1103	<TRQ>

OBD0489

CA: DTC P1103 — ENGINE TORQUE CONTROL SIGNAL CIRCUIT MALFUNCTION —

WIRING DIAGRAM:

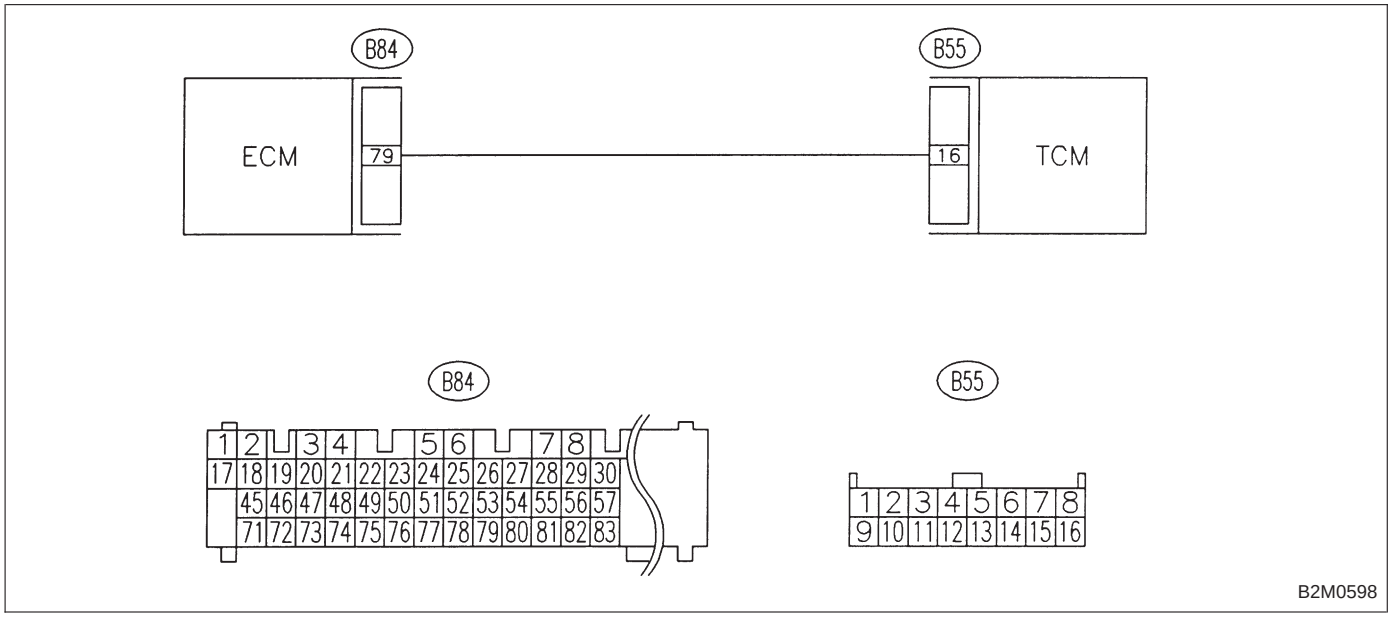

NOTE:
Check engine torque control signal circuit.
<Ref. to 2-7 [T10CB0].>

OBD (FB1)

P1120 <ST_SWON>

B2M1122

CB: DTC P1120
— STARTER SWITCH CIRCUIT HIGH INPUT —

WIRING DIAGRAM:

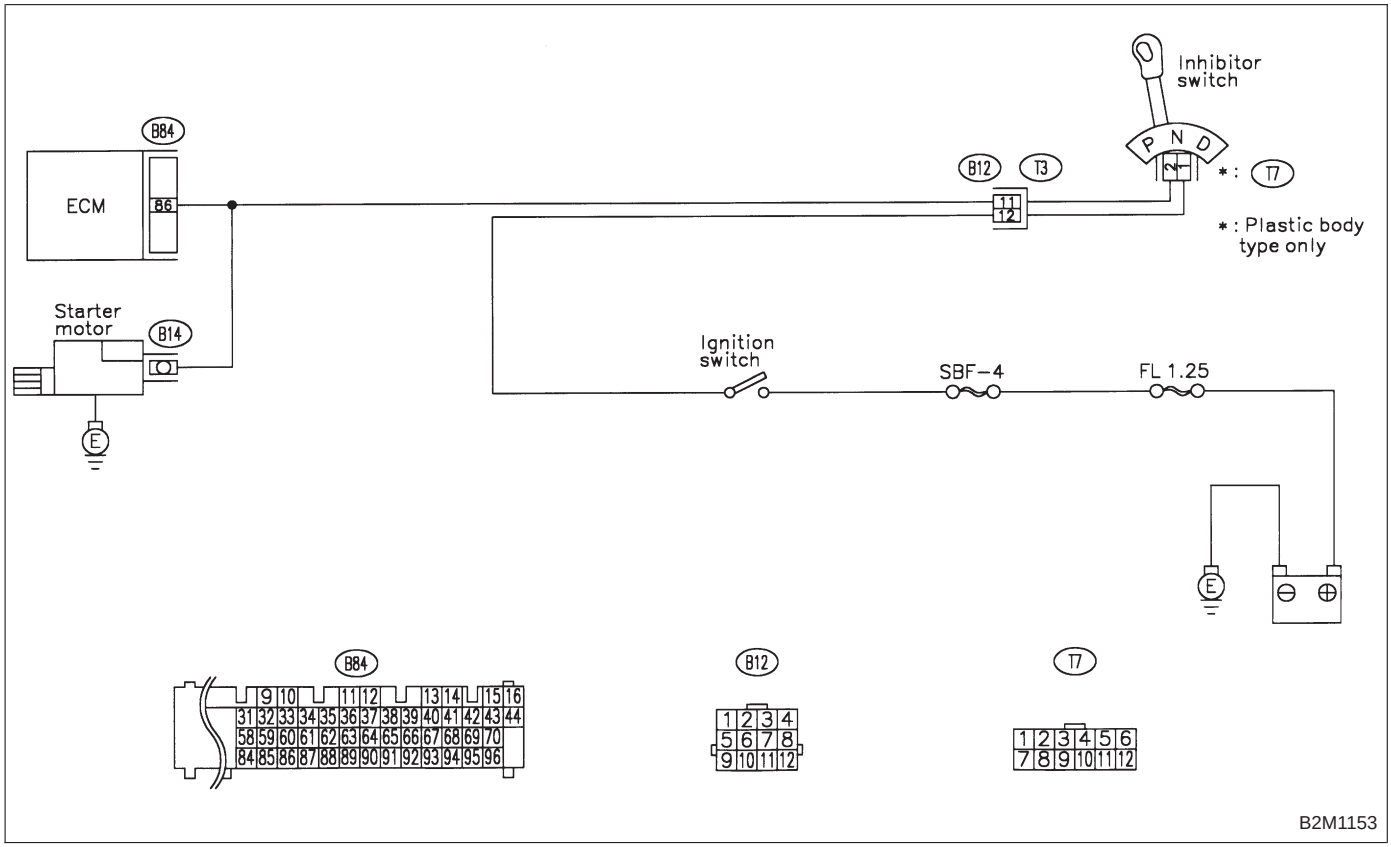

NOTE:
Check starter switch circuit.
<Ref. to 2-7 [T10CD0].>

OBD (FB1)

P1121 <N_SWON>

B2M1123

CC: DTC P1121 — NEUTRAL POSITION SWITCH CIRCUIT LOW INPUT [AT VEHICLES] —

WIRING DIAGRAM:

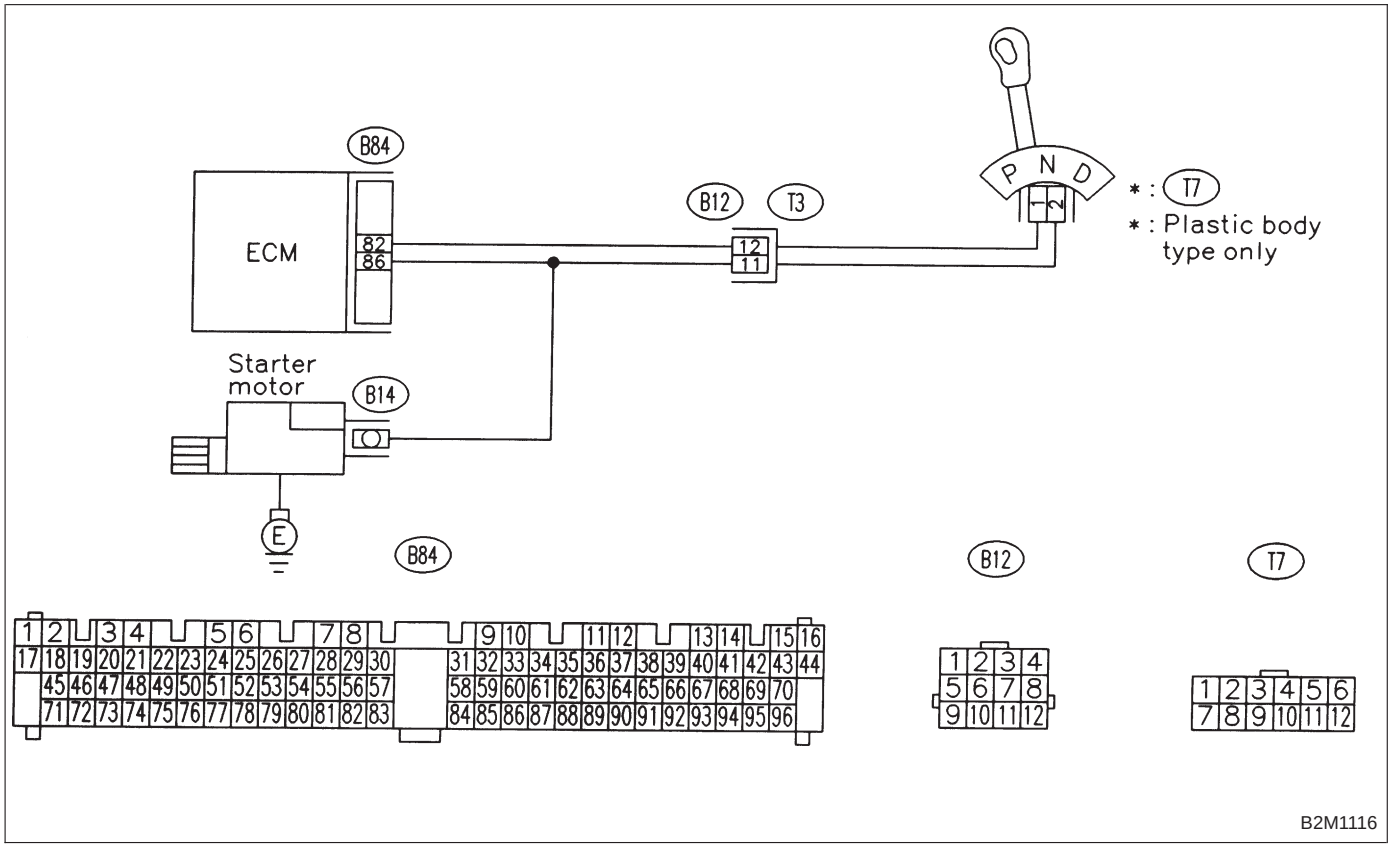

B2M1116

NOTE:
Check neutral position switch circuit.
<Ref. to 2-7 [T10CE0].>

OBD (FB1)
P1122 <BR_HI>
B2M1124

CD: DTC P1122 — PRESSURE SOURCES SWITCHING SOLENOID VALVE CIRCUIT HIGH INPUT —

WIRING DIAGRAM:

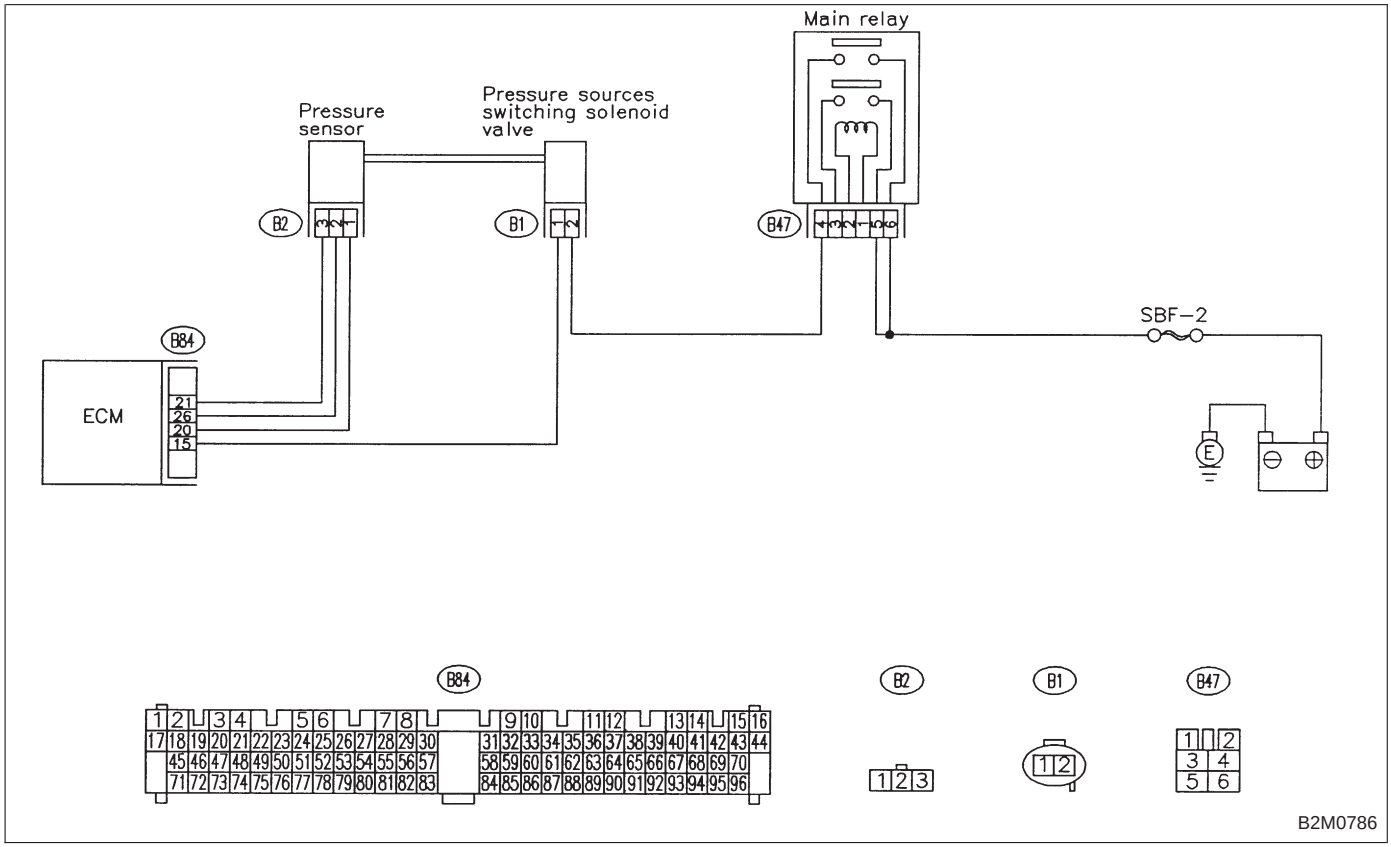

NOTE:
Check pressure sources switching solenoid valve circuit.
<Ref. to 2-7 [T10CF0].>

OBD (FB1)

P1141 <QA_RHI>

B2M1126

CE: DTC P1141 — MASS AIR FLOW SENSOR CIRCUIT RANGE/PERFORMANCE PROBLEM (HIGH INPUT) —

WIRING DIAGRAM:

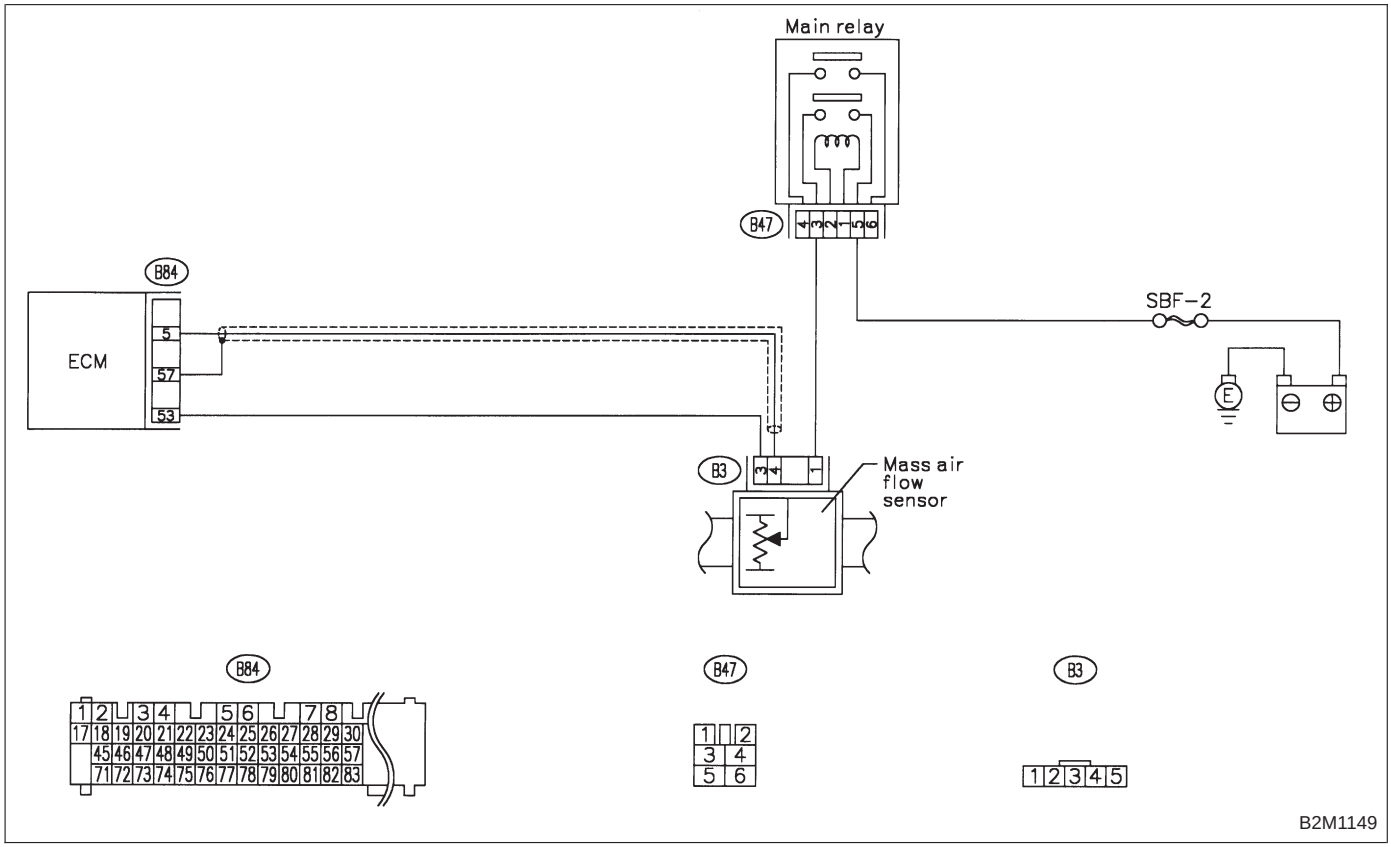

NOTE:
Check mass air flow sensor circuit.
<Ref. to 2-7 [T10CH0].>

OBD (FB1)

P1142 <TH_RLOW>

B2M1127

CF: DTC P1142 — THROTTLE POSITION SENSOR CIRCUIT RANGE/PERFORMANCE PROBLEM (LOW INPUT) —

WIRING DIAGRAM:

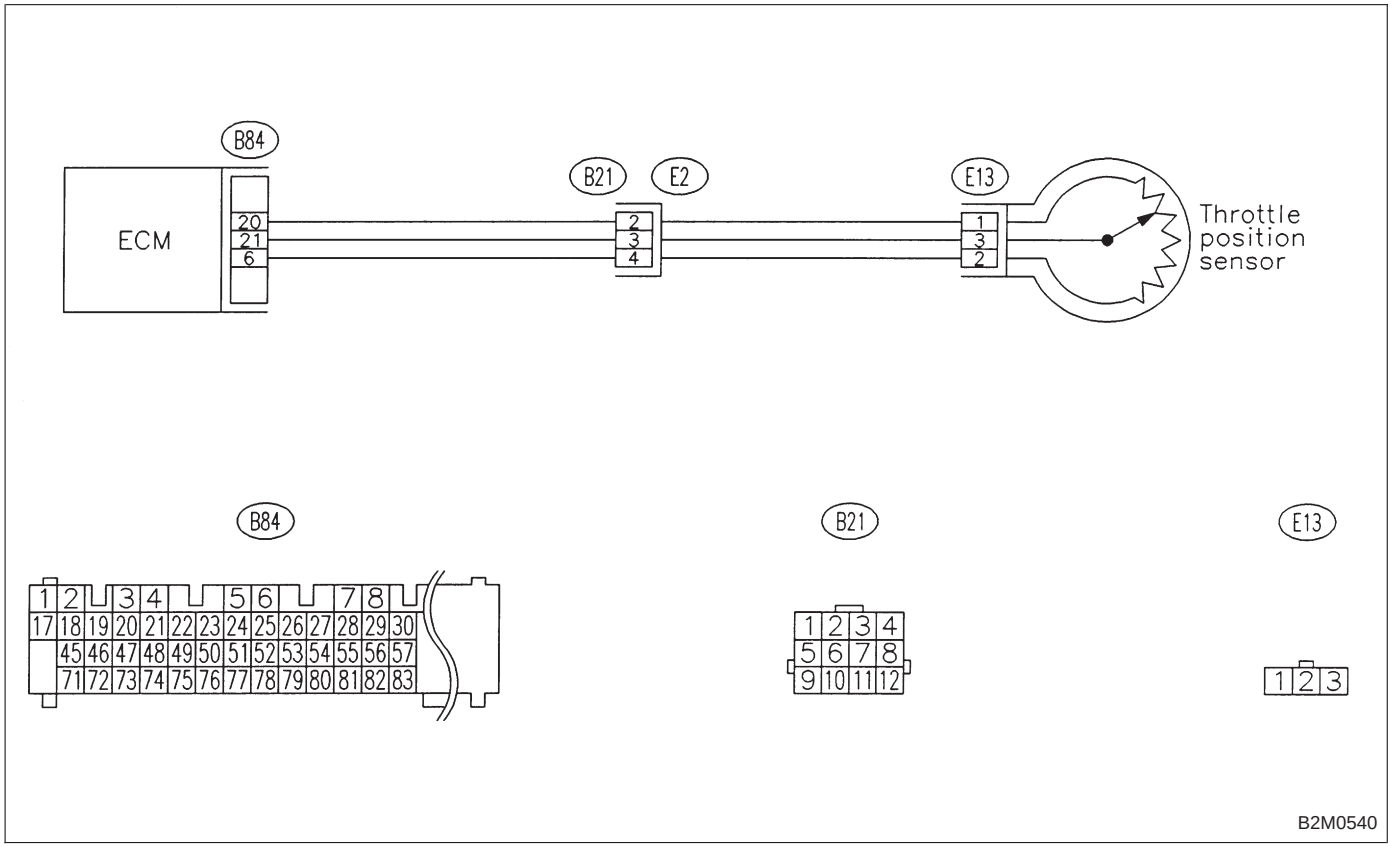

NOTE:
Check throttle position sensor circuit.
<Ref. to 2-7 [T10CI0].>

OBD (FB1)

P1143 <PS_RLOW>

B2M1128

CG: DTC P1143 — PRESSURE SENSOR CIRCUIT RANGE/PERFORMANCE PROBLEM (LOW INPUT) —

WIRING DIAGRAM:

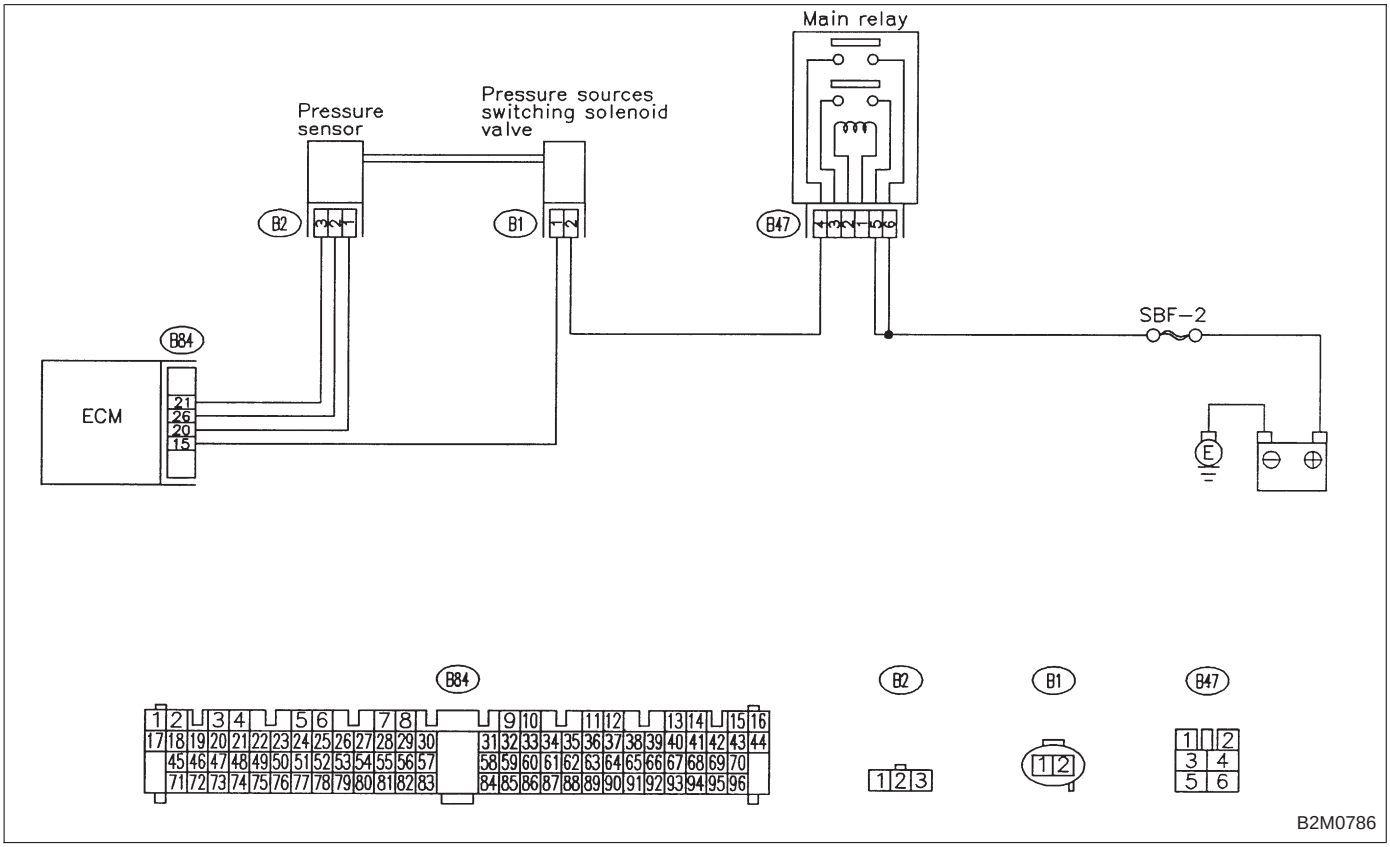

NOTE:
Check pressure sensor circuit.
<Ref. to 2-7 [T10CJ0].>

OBD (FB1)

P1144 <PS_RHI>

B2M1129

CH: DTC P1144 — PRESSURE SENSOR CIRCUIT RANGE/PERFORMANCE PROBLEM (HIGH INPUT) —

WIRING DIAGRAM:

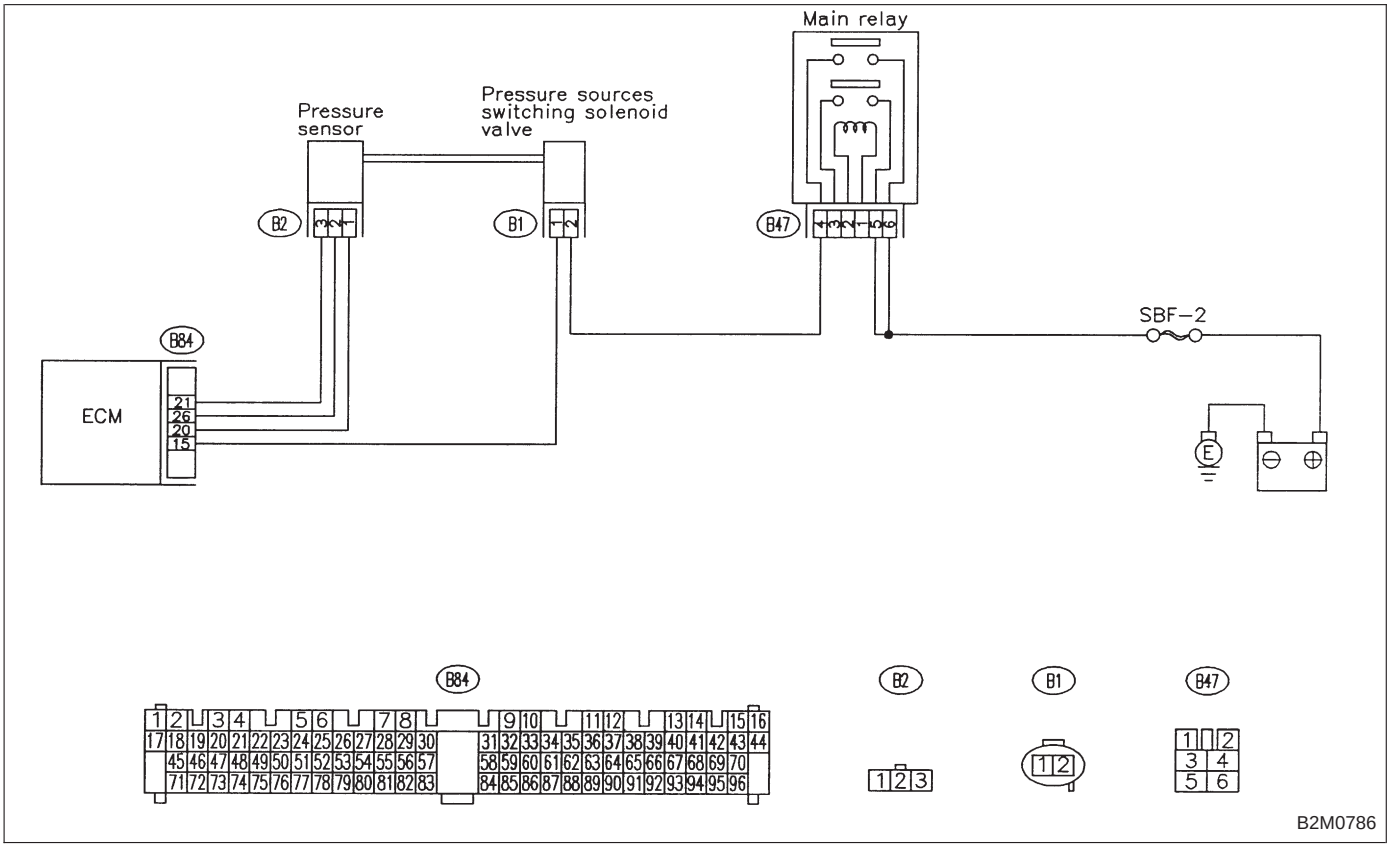

NOTE:
Check pressure sensor circuit.
<Ref. to 2-7 [T10CK0].>

OBD (FB1)

P1400<PCVSOL_LO>

B2M1130

CI: DTC P1400 — FUEL TANK PRESSURE CONTROL SOLENOID VALVE CIRCUIT LOW INPUT —

DTC DETECTING CONDITION:

- Two consecutive driving cycles with fault

WIRING DIAGRAM:

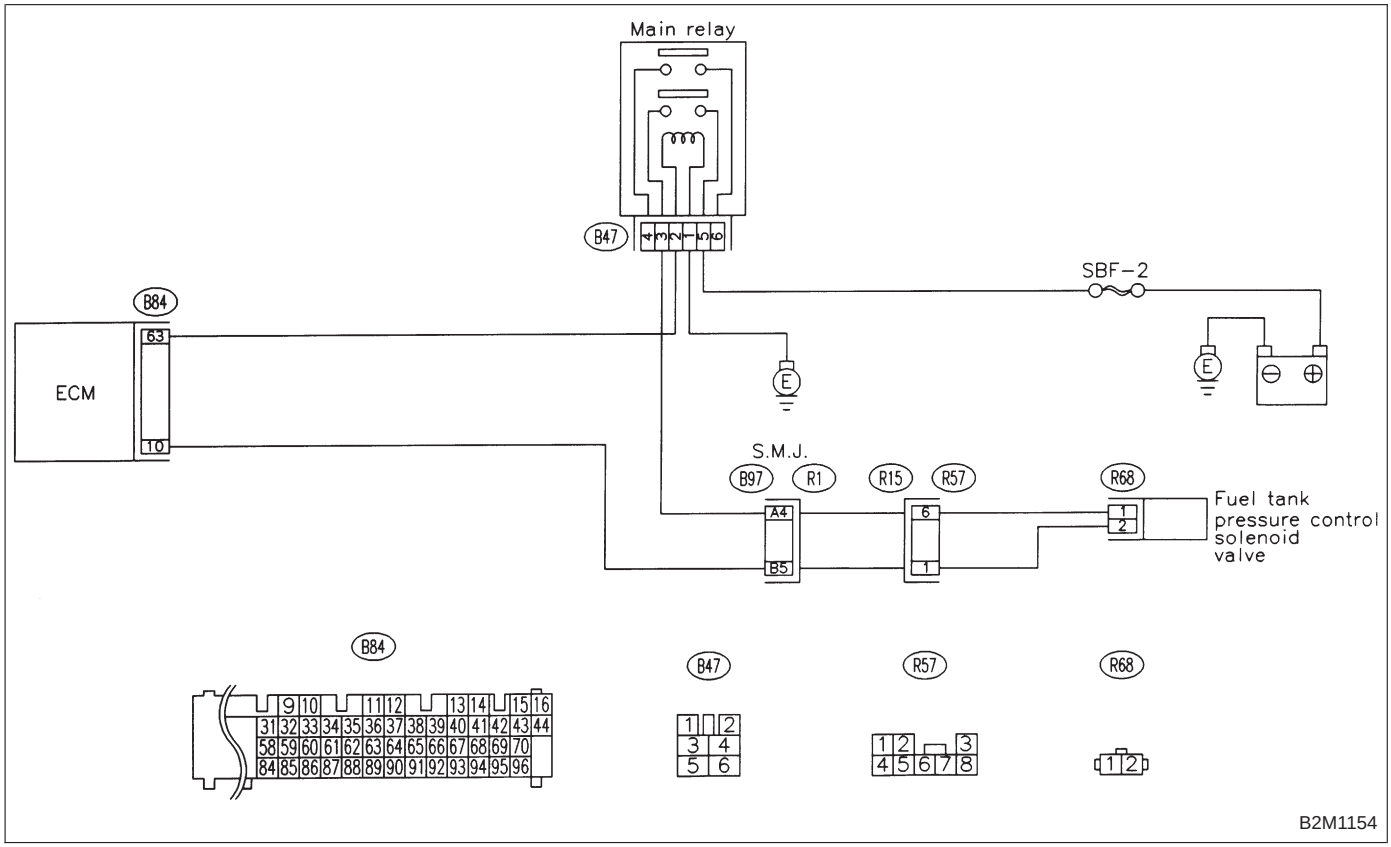

CAUTION:
After repair or replacement of faulty parts, conduct CLEAR MEMORY and INSPECTION MODES.
<Ref. to 2-7 [T3D0] and [T3E0].>

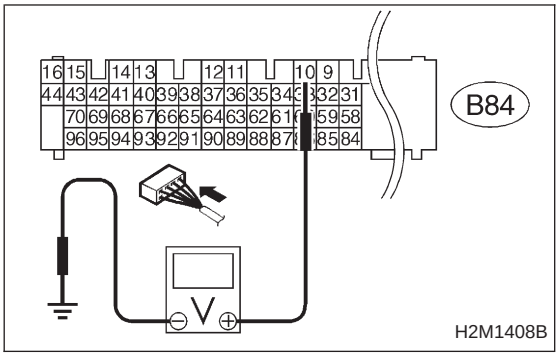

11CI1	CHECK OUTPUT SIGNAL FROM ECM.

1) Turn ignition switch to ON.
2) Measure voltage between ECM and chassis ground.

CHECK : ***Connector & terminal (B84) No. 10 (+) — Chassis ground (−): Is the voltage more than 10 V?***

YES : Go to next CHECK .

NO : Go to step **11CI2**.

CHECK : ***Is there poor contact in ECM connector?***

YES : Repair poor contact in ECM connector.

NO : Contact with SOA service.

NOTE:
Inspection by DTM is required, because probable cause is deterioration of multiple parts.

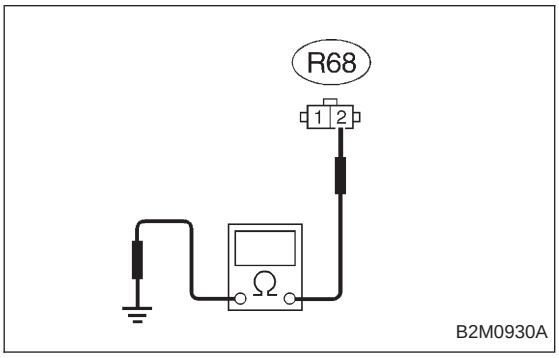

11CI2	CHECK HARNESS BETWEEN FUEL TANK PRESSURE CONTROL SOLENOID VALVE AND ECM CONNECTOR.

1) Turn ignition switch to OFF.
2) Disconnect connectors from fuel tank pressure control solenoid valve and ECM.
3) Measure resistance of harness between fuel tank pressure control solenoid valve connector and chassis ground.

CHECK : ***Connector & terminal (R68) No. 2 — Chassis ground: Is the resistance less than 10 Ω?***

YES : Repair ground short circuit in harness between ECM and fuel tank pressure control solenoid valve connector.

NO : Go to next step 4).

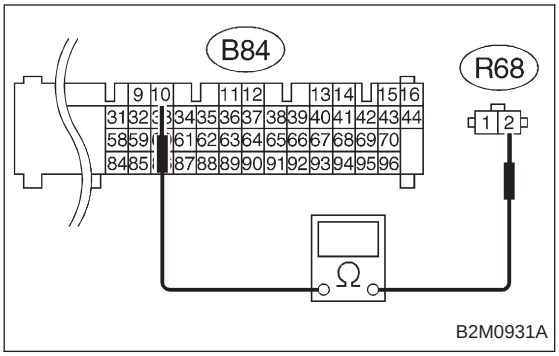

4) Measure resistance of harness between ECM and fuel tank pressure control solenoid valve connector.

CHECK : ***Connector & terminal (B84) No. 10 — (R68) No. 2: Is the voltage less than 1 Ω?***

YES : Go to step **11CI3**.

NO : Repair harness and connector.

NOTE:
In this case, repair the following:
- Open circuit in harness between ECM and fuel tank pressure control solenoid valve connector
- Poor contact in coupling connectors (B97 and R57)

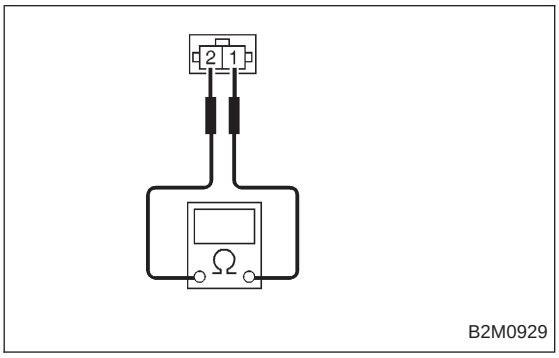

11CI3	CHECK FUEL TANK PRESSURE CONTROL SOLENOID VALVE.

Measure resistance between fuel tank pressure control solenoid valve terminals.

CHECK : ***Terminals No. 1 — No. 2: Is the resistance between 10 and 100 Ω?***

YES : Go to step **11CI4**.

NO : Replace fuel tank pressure control solenoid valve.

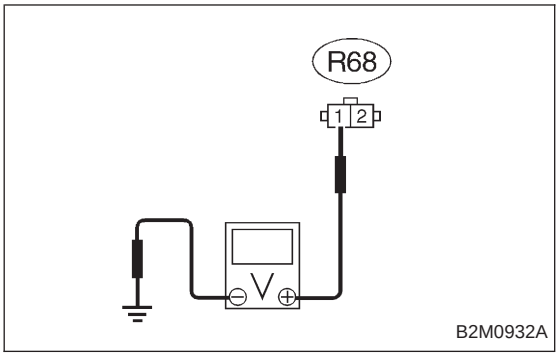

11CI4	CHECK POWER SUPPLY TO FUEL TANK PRESSURE CONTROL SOLENOID VALVE.

1) Turn ignition switch to ON.
2) Measure voltage between fuel tank pressure control solenoid valve and chassis ground.

CHECK : ***Connector & terminal (R68) No. 1 (+) — Chassis ground (−): Is the voltage more than 10 V?***

YES : Go to next CHECK .

NO : Repair harness and connector.

NOTE:
In this case, repair the following:
- Open circuit in harness between main relay and fuel tank pressure control solenoid valve connector
- Poor contact in coupling connectors (B97 and R57)
- Poor contact in main relay connector

CHECK : ***Is there poor contact in fuel tank pressure control solenoid valve connector?***

YES : Repair poor contact in fuel tank pressure control solenoid valve connector.

NO : Contact with SOA service.

NOTE:
Inspection by DTM is required, because probable cause is deterioration of multiple parts.

OBD (FB1)

P1420<PCVSOL_HI>

B2M1131

CJ: DTC P1420 — FUEL TANK PRESSURE CONTROL SOLENOID VALVE CIRCUIT HIGH INPUT —

DTC DETECTING CONDITION:

- Two consecutive driving cycles with fault

WIRING DIAGRAM:

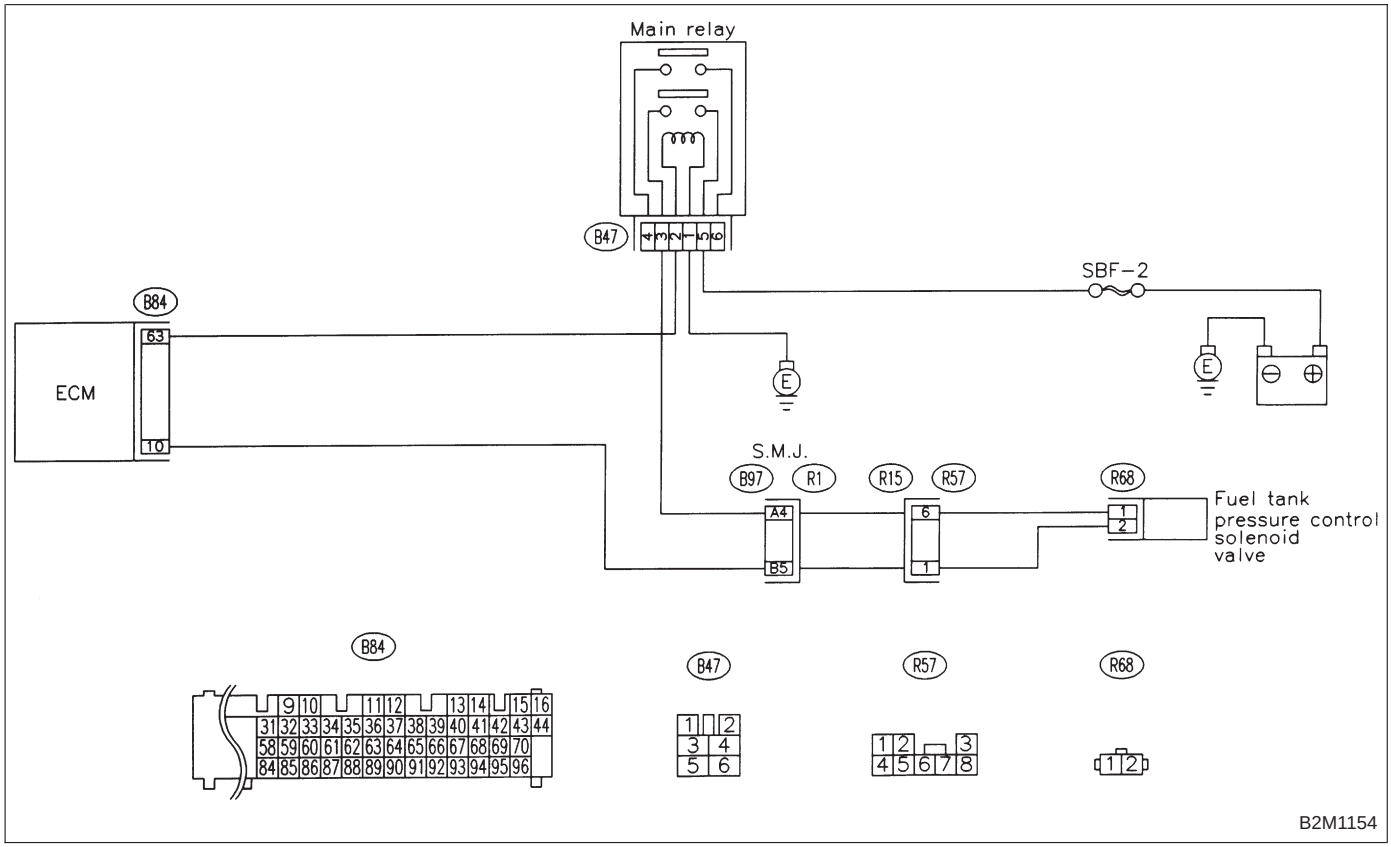

CAUTION:
After repair or replacement of faulty parts, conduct CLEAR MEMORY and INSPECTION MODES.
<Ref. to 2-7 [T3D0] and [T3E0].>

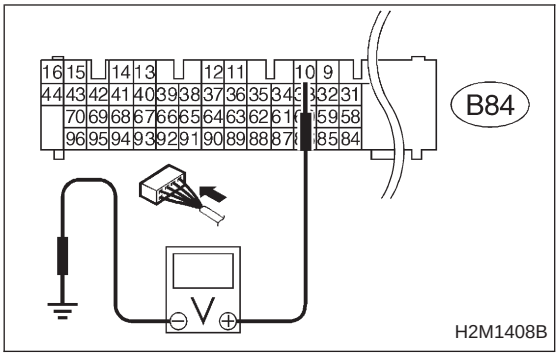

11CJ1	CHECK OUTPUT SIGNAL FROM ECM.

1) Turn ignition switch to ON.
2) Measure voltage between ECM and chassis ground.

CHECK : ***Connector & terminal (B84) No. 10 (+) — Chassis ground (−): Is the voltage more than 10 V?***

YES : Go to step **11CJ2**.

NO : Go to next CHECK .

CHECK : ***Is there poor contact in ECM connector?***

YES : Repair poor contact in ECM connector.

NO : Replace ECM.

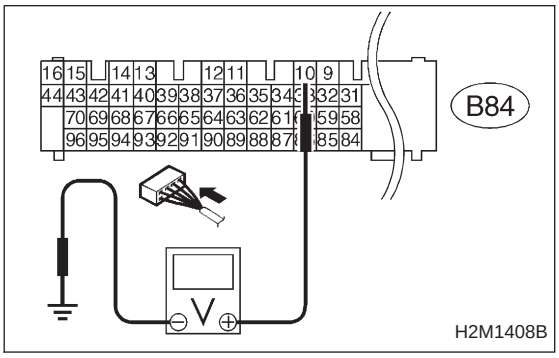

11CJ2	CHECK HARNESS BETWEEN FUEL TANK PRESSURE CONTROL SOLENOID VALVE AND ECM CONNECTOR.

1) Turn ignition switch to OFF.
2) Disconnect connector from fuel tank pressure control solenoid valve.
3) Turn ignition switch to ON.
4) Measure voltage between ECM and chassis ground.

CHECK : ***Connector & terminal (B84) No. 10 (+) — Chassis ground (−): Is the voltage more than 10 V?***

YES : Repair battery short circuit in harness between ECM and fuel tank pressure control solenoid valve connector. After repair, replace ECM.

NO : Go to next step 5).

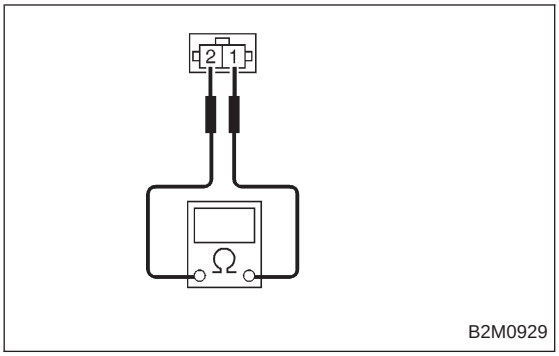

5) Turn ignition switch to OFF.
6) Measure resistance between fuel tank pressure control solenoid valve terminals.

CHECK ***: Terminals No. 1 — No. 2: Is the resistance less than 1 Ω?***

YES : Replace fuel tank pressure control solenoid valve and ECM.

NO : Go to next CHECK .

CHECK ***: Is there poor contact in ECM connector?***

YES : Repair poor contact in ECM connector.

NO : Replace ECM.

OBD (FB1)

P1421<EGRSOL_HI>

B2M1132

CK: DTC P1421 — EXHAUST GAS RECIRCULATION CIRCUIT HIGH INPUT —

WIRING DIAGRAM:

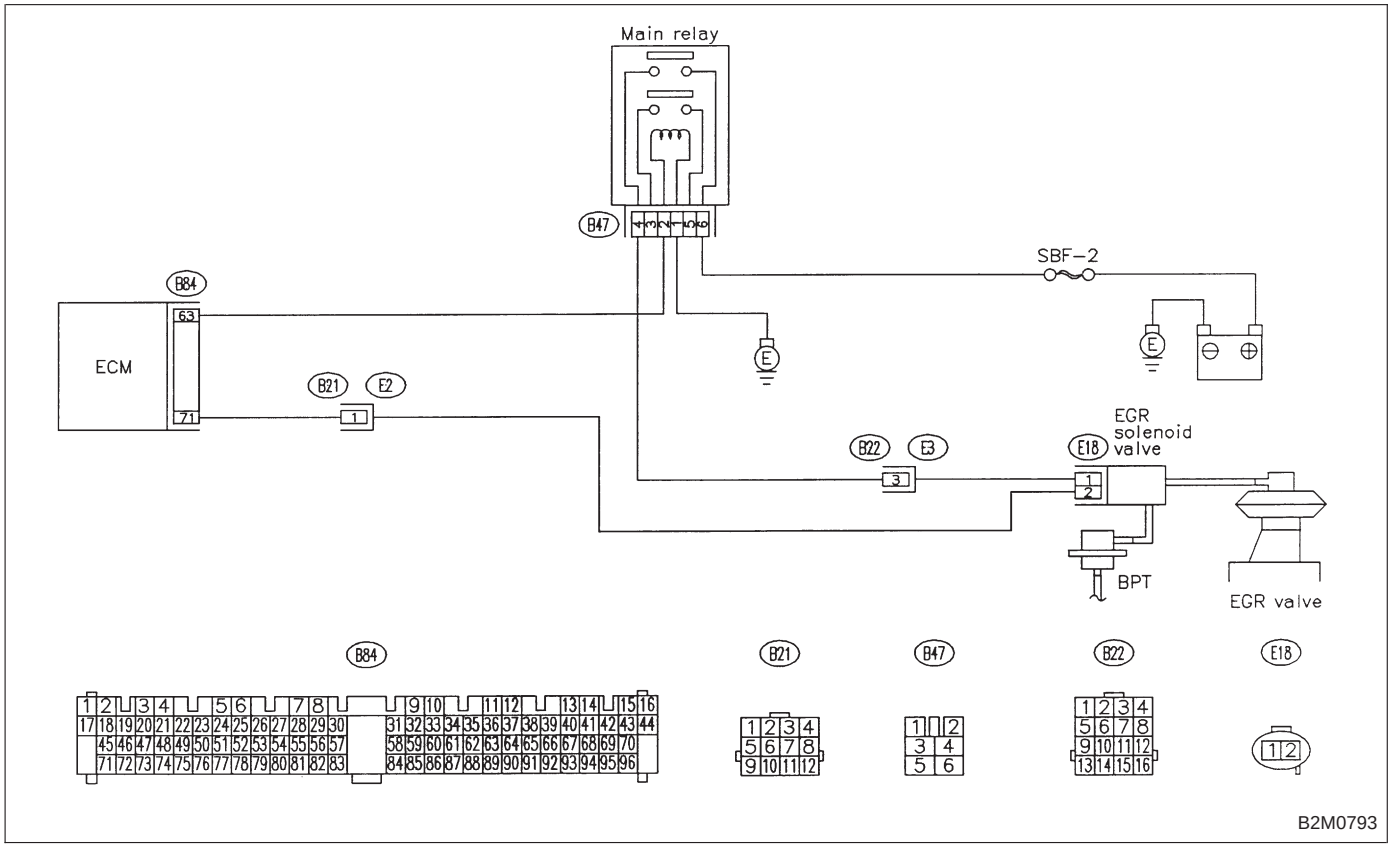

NOTE:
Check exhaust gas recirculation control solenoid valve circuit.
<Ref. to 2-7 [T10CN0].>

OBD (FB1)

P1422 <CPC_HI>

B2M1133

CL: DTC P1422 — EVAPORATIVE EMISSION CONTROL SYSTEM PURGE CONTROL VALVE CIRCUIT HIGH INPUT —

WIRING DIAGRAM:

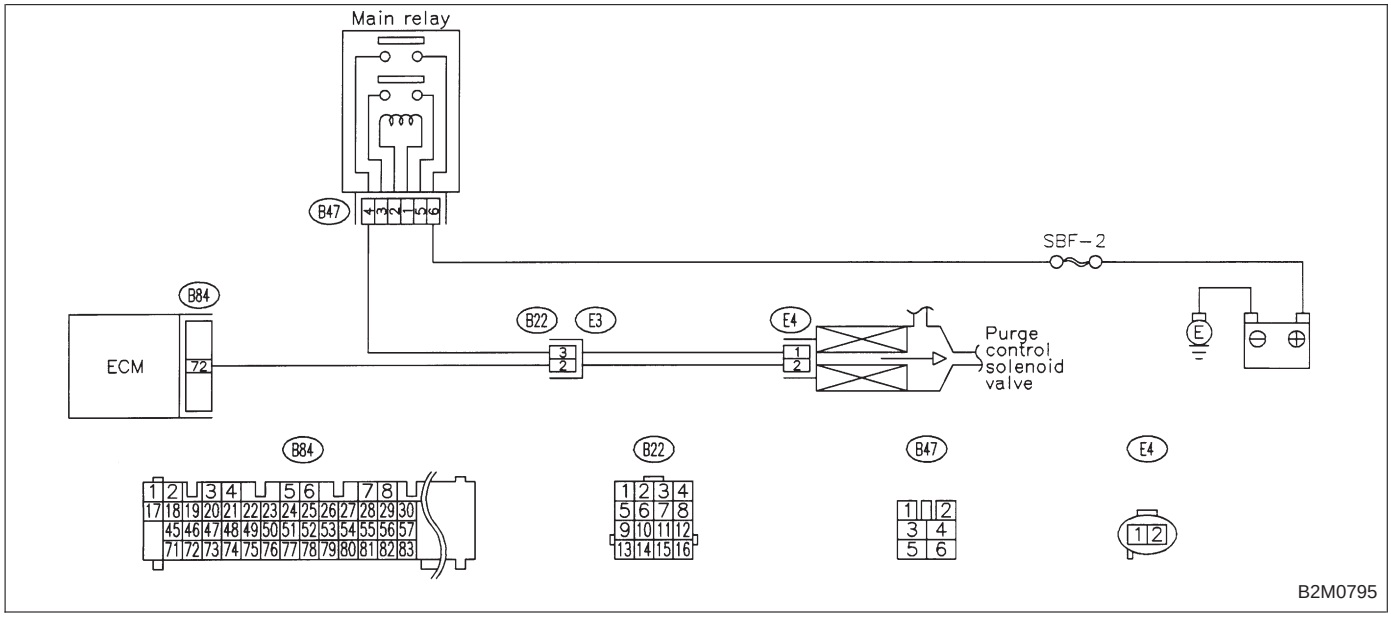

NOTE:
Check canister purge control system.
<Ref. to 2-7 [T10CO0].>

OBD (FB1)

P1423<VCMSOL_HI>

B2M1134

CM: DTC P1423 — EVAPORATIVE EMISSION CONTROL SYSTEM VENT CONTROL HIGH INPUT —

DTC DETECTING CONDITION:

- Two consecutive driving cycles with fault

WIRING DIAGRAM:

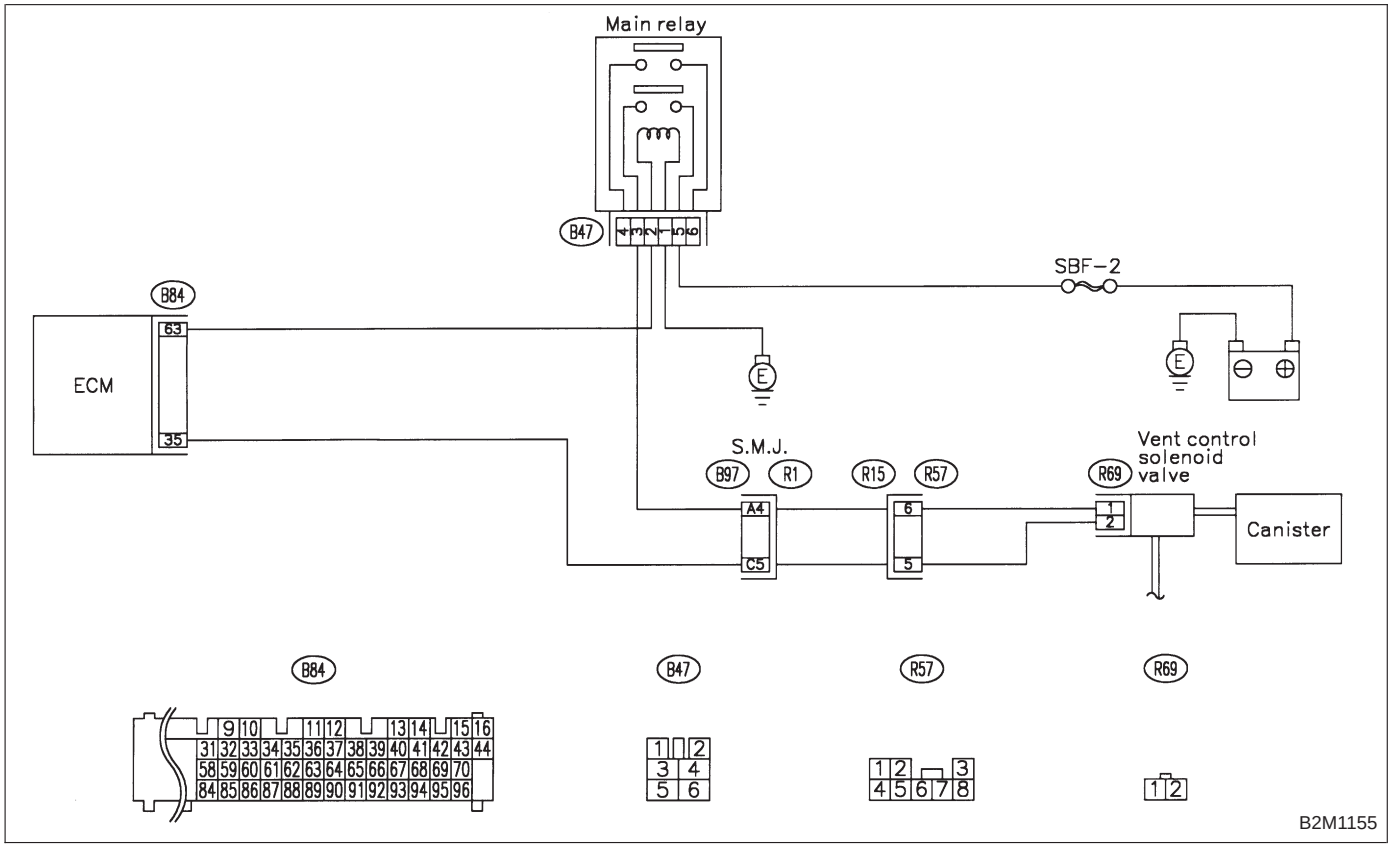

CAUTION:
After repair or replacement of faulty parts, conduct CLEAR MEMORY and INSPECTION MODES.
<Ref. to 2-7 [T3D0] and [T3E0].>

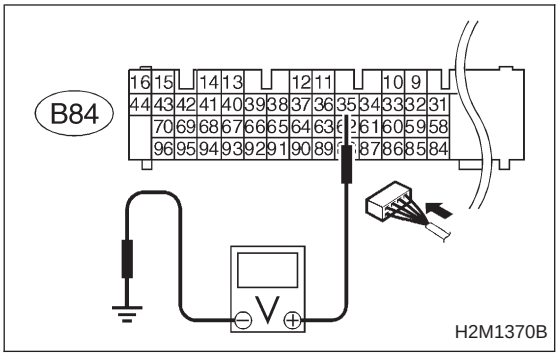

11CM1	CHECK OUTPUT SIGNAL FROM ECM.

1) Turn ignition switch to ON.
2) Measure voltage between ECM and chassis ground.

CHECK : ***Connector & terminal (B84) No. 35 (+) — Chassis ground (−): Is the voltage more than 10 V?***

YES : Go to step **11CM2**.

NO : Go to next CHECK .

CHECK : ***Is there poor contact in ECM connector?***

YES : Repair poor contact in ECM connector.

NO : Replace ECM.

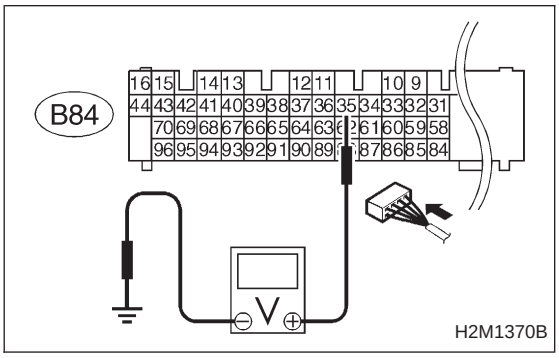

11CM2	CHECK HARNESS BETWEEN VENT CONTROL SOLENOID VALVE AND ECM CONNECTOR.

1) Turn ignition switch to OFF.
2) Disconnect connector from vent control solenoid valve.
3) Turn ignition switch to ON.
4) Measure voltage between ECM and chassis ground.

CHECK : ***Connector & terminal (B84) No. 35 (+) — Chassis ground (−): Is the voltage more than 10 V?***

YES : Repair battery short circuit in harness between ECM and vent control solenoid valve connector. After repair, replace ECM.

NO : Go to next step 5).

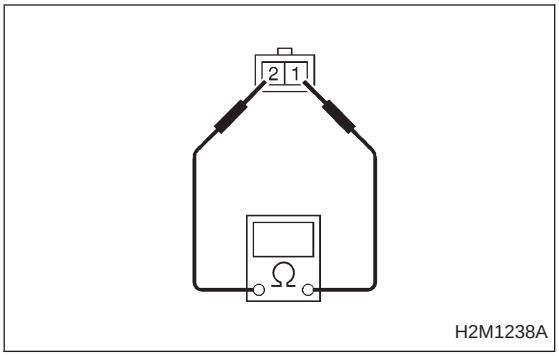

5) Turn ignition switch to OFF.
6) Measure resistance between vent control solenoid valve terminals.

CHECK : ***Terminals No. 1 — No. 2: Is the resistance less than 1 Ω?***

YES : Replace vent control solenoid valve and ECM.

NO : Go to next CHECK .

CHECK : ***Is there poor contact in ECM connector?***

YES : Repair poor contact in ECM connector.

NO : Replace ECM.

OBD (FB1)

P1440 <PCV_FLOW>

B2M1135

CN: DTC P1440 — FUEL TANK PRESSURE CONTROL SYSTEM FUNCTION PROBLEM (LOW INPUT) —

WIRING DIAGRAM:

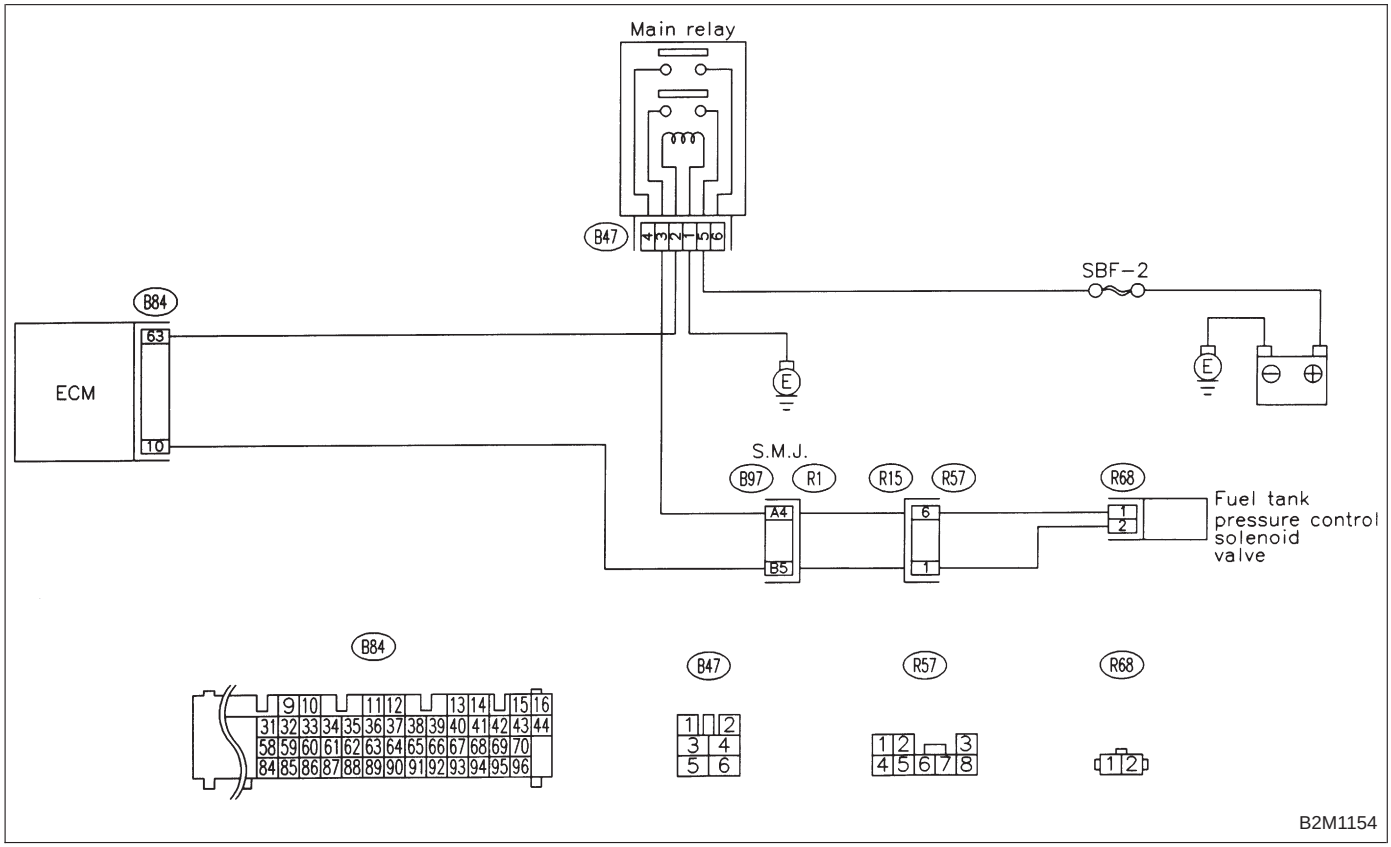

NOTE:
Check fuel tank pressure control system.
<Ref. to 2-7 [T10CQ0].>

OBD (FB1)

P1441 <PCV_FHI>

B2M1136

CO: DTC P1441 — FUEL TANK PRESSURE CONTROL SYSTEM FUNCTION PROBLEM (HIGH INPUT) —

WIRING DIAGRAM:

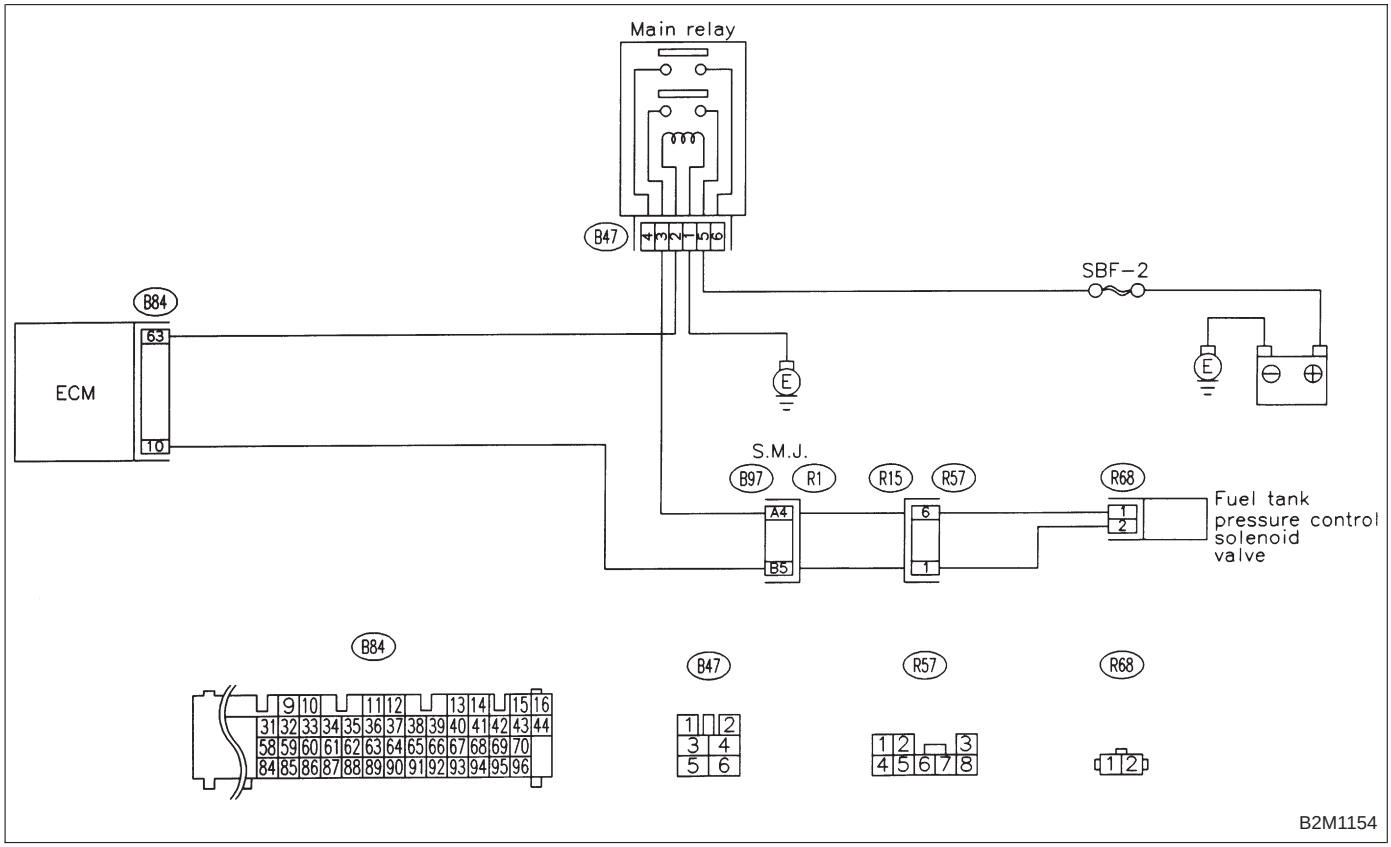

NOTE:
Check fuel tank pressure control system.
<Ref. to 2-7 [T10CR0].>

OBD (FB1)

P1442 <FLVL_R2>

B2M1137

CP: DTC P1442 — FUEL LEVEL SENSOR CIRCUIT RANGE/ PERFORMANCE PROBLEM 2 —

DTC DETECTING CONDITION:

- Two consecutive driving cycles with fault

WIRING DIAGRAM:

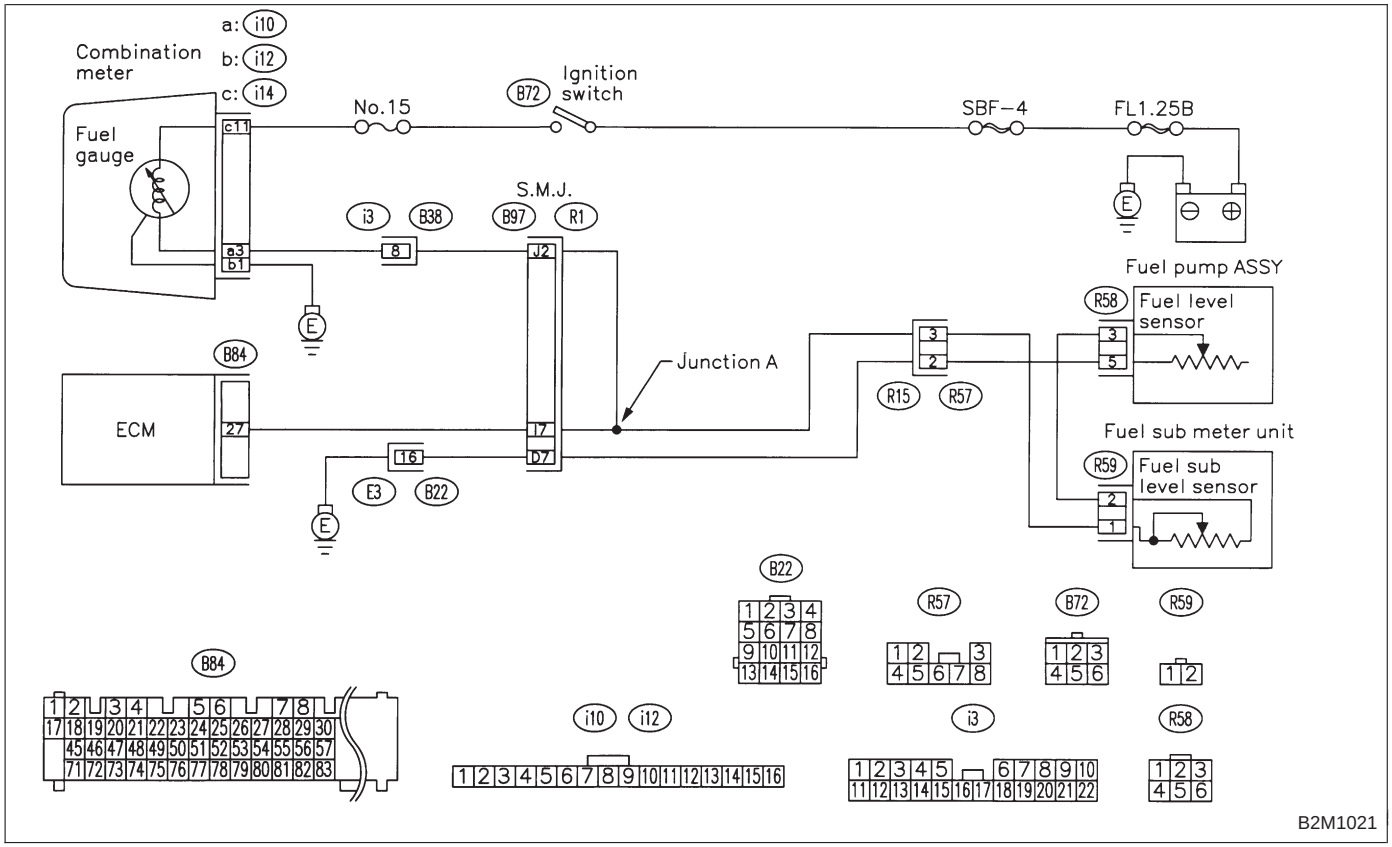

CAUTION:
After repair or replacement of faulty parts, conduct CLEAR MEMORY and INSPECTION MODES.
<Ref. to 2-7 [T3D0] and [T3E0].>

11CP1	CHECK DTC P0461, P0462 OR P0463 ON DISPLAY.

CHECK : ***Does the Subaru select monitor or OBD-II general scan tool indicate DTC P0461, P0462 or P0463?***

YES : Inspect DTC P0461, P0462 or P0463 using “11. Diagnostics Chart with Trouble Code”. <Ref. to 2-7 [T11A0].>

NOTE:
In this case, it is not necessary to inspect this trouble.

NO : Replace fuel sending unit and fuel sub meter unit.

OBD	(FB1)
P1500	<FAN_1>

OBD0527

CQ: DTC P1500 — RADIATOR FAN RELAY 1 CIRCUIT LOW INPUT —

WIRING DIAGRAM:

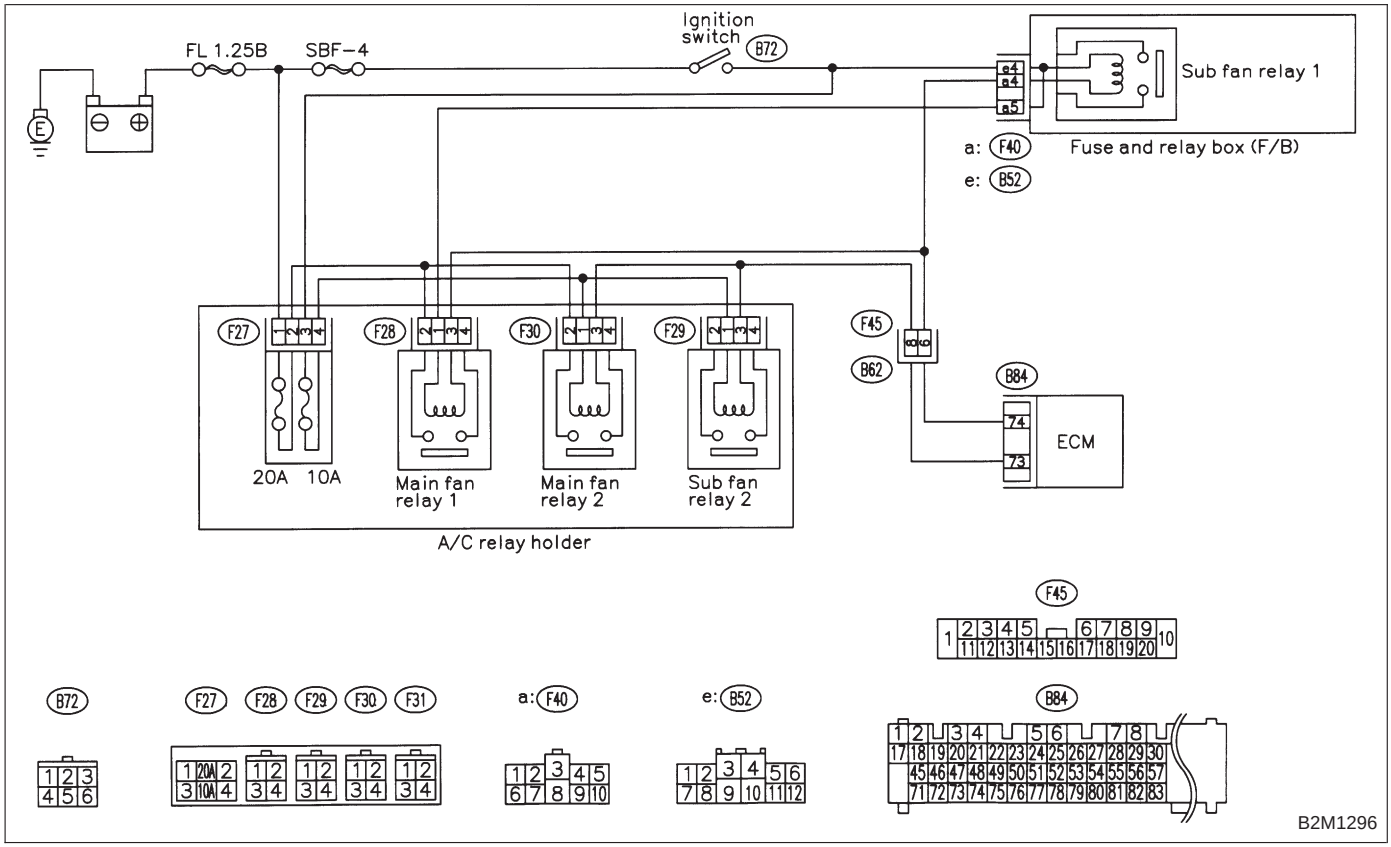

NOTE:
Check radiator fan relay 1 circuit.
<Ref. to 2-7 [T10CT0].>

OBD	(FB1)
P1502	<FAN_F>

OBD0538

CR: DTC P1502
— RADIATOR FAN FUNCTION PROBLEM —

WIRING DIAGRAM:

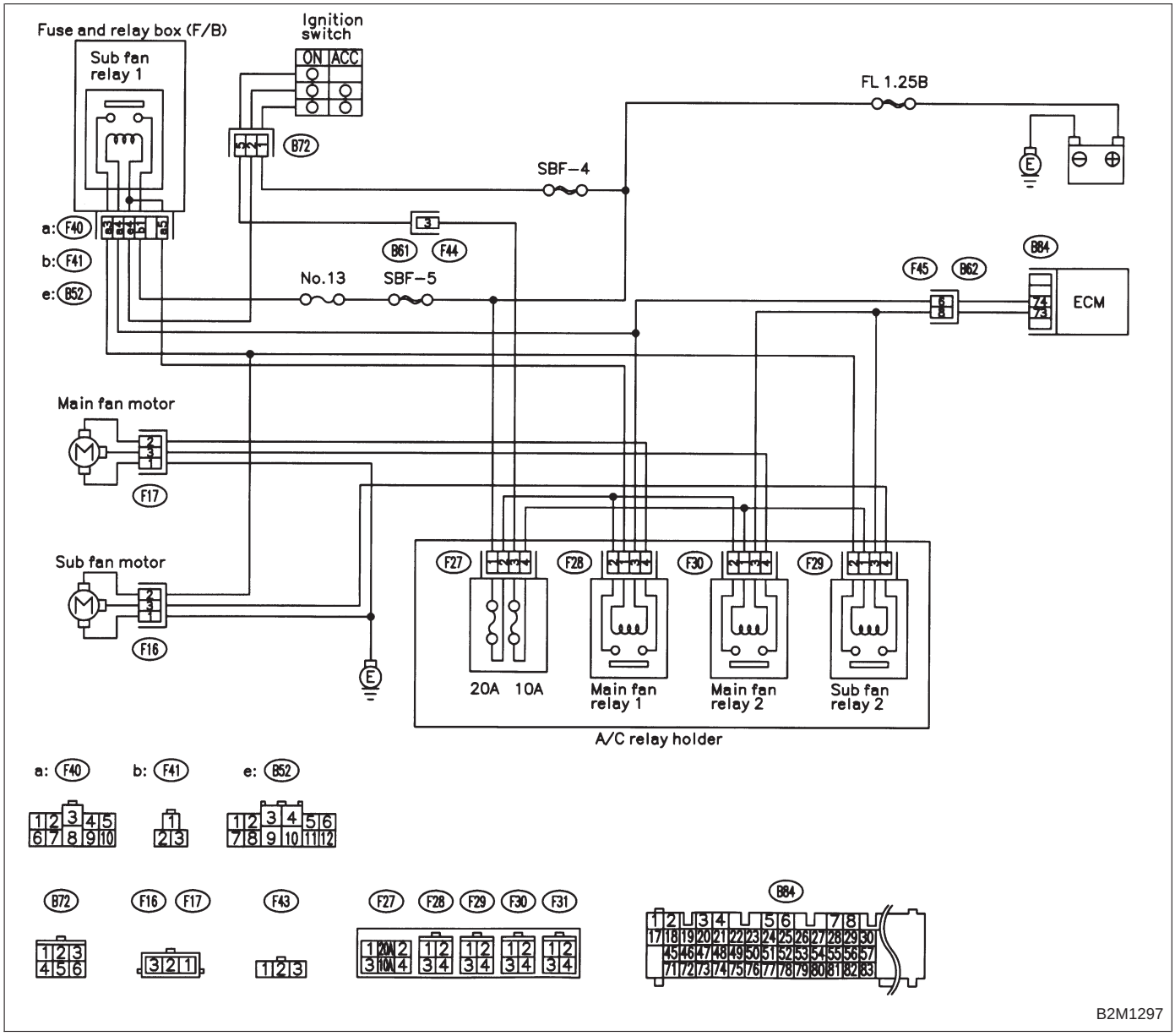

NOTE:
Check radiator fan control system.
<Ref. to 2-7 [T10CU0].>

OBD (FB1)

P1507 <ISC_SHI>

B2M1140

CS: DTC P1507 — IDLE CONTROL SYSTEM MALFUNCTION (FAIL-SAFE) —

WIRING DIAGRAM:

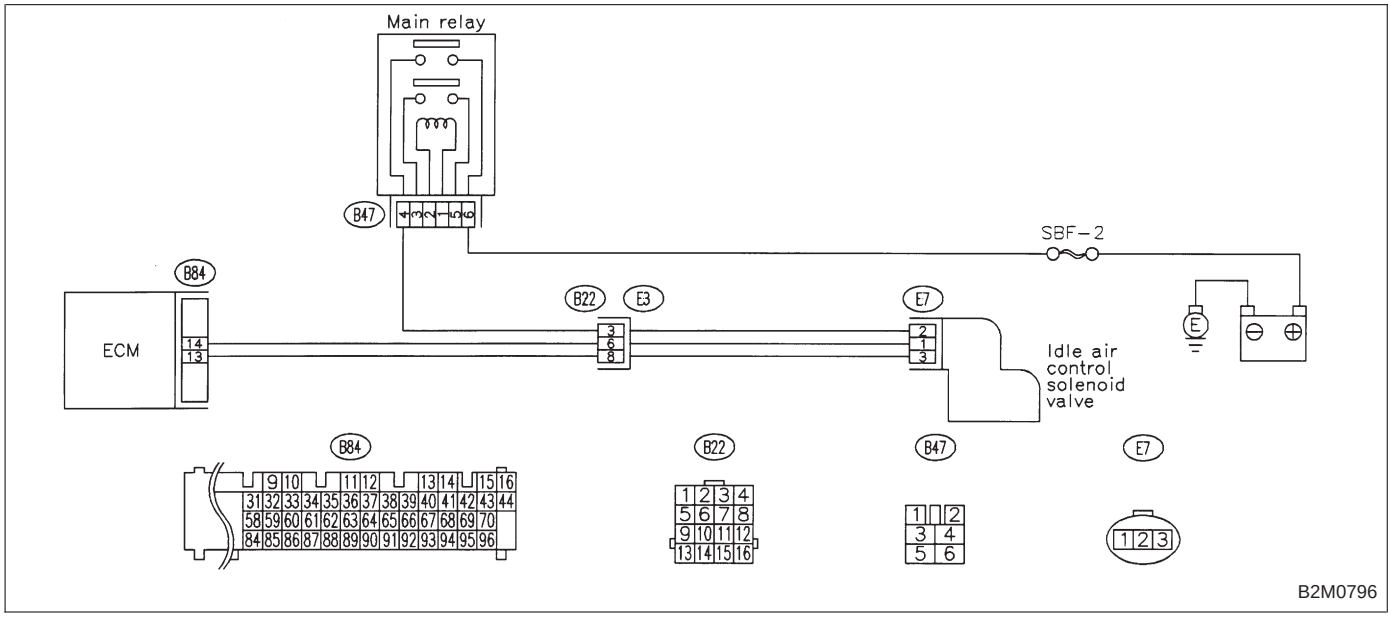

NOTE:
Check idle air control system.
<Ref. to 2-7 [T10CV0].>

OBD (FB1)

P1520 <FAN_1HI>

B2M1141

CT: DTC P1520
— RADIATOR FAN RELAY 1 CIRCUIT HIGH INPUT —

WIRING DIAGRAM:

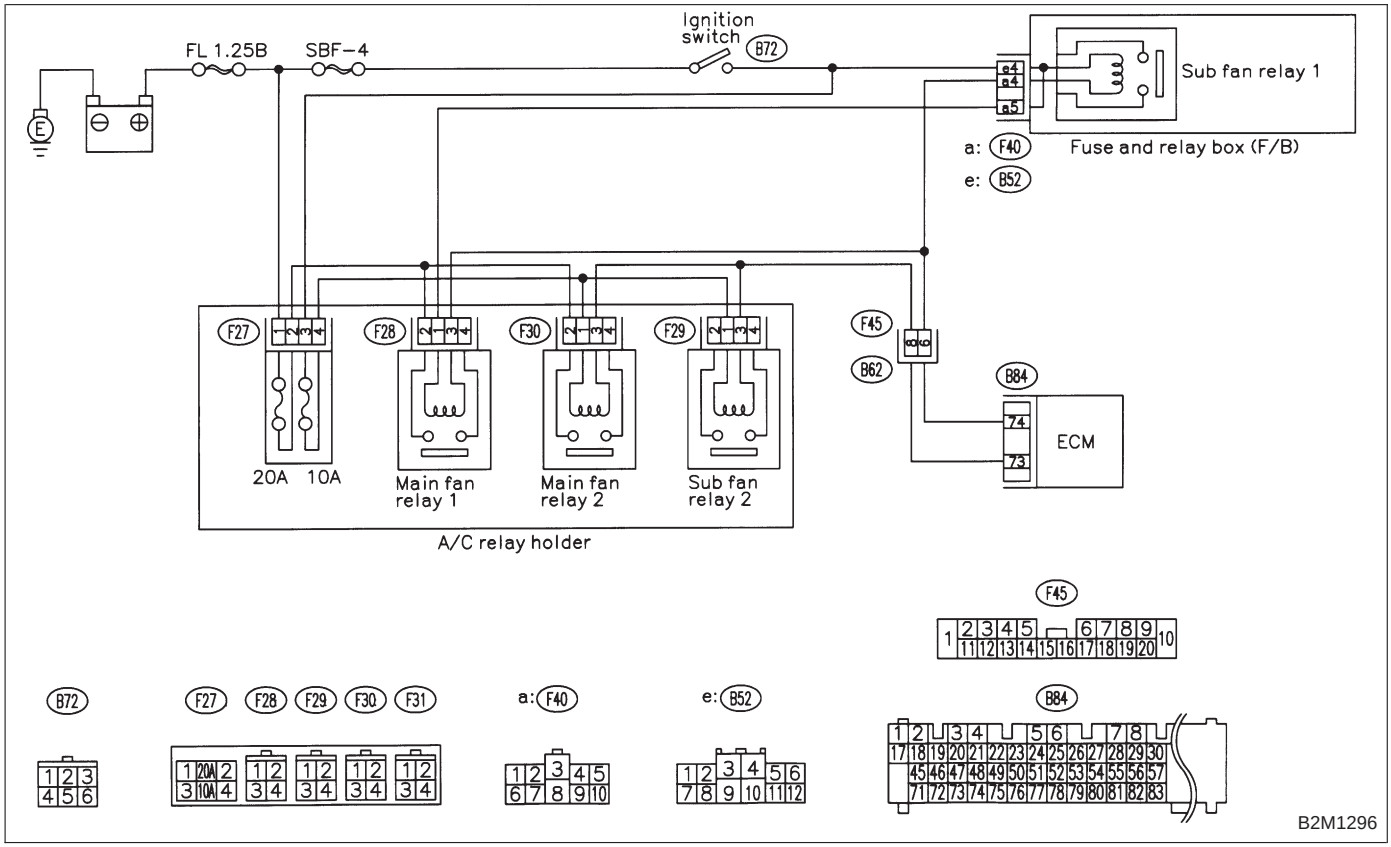

NOTE:
Check radiator fan relay 1 circuit.
<Ref. to 2-7 [T10CW0].>

OBD (FB1)

P1540 <VSP_S>

B2M1142

CU: DTC P1540 — VEHICLE SPEED SENSOR MALFUNCTION 2 —

WIRING DIAGRAM:

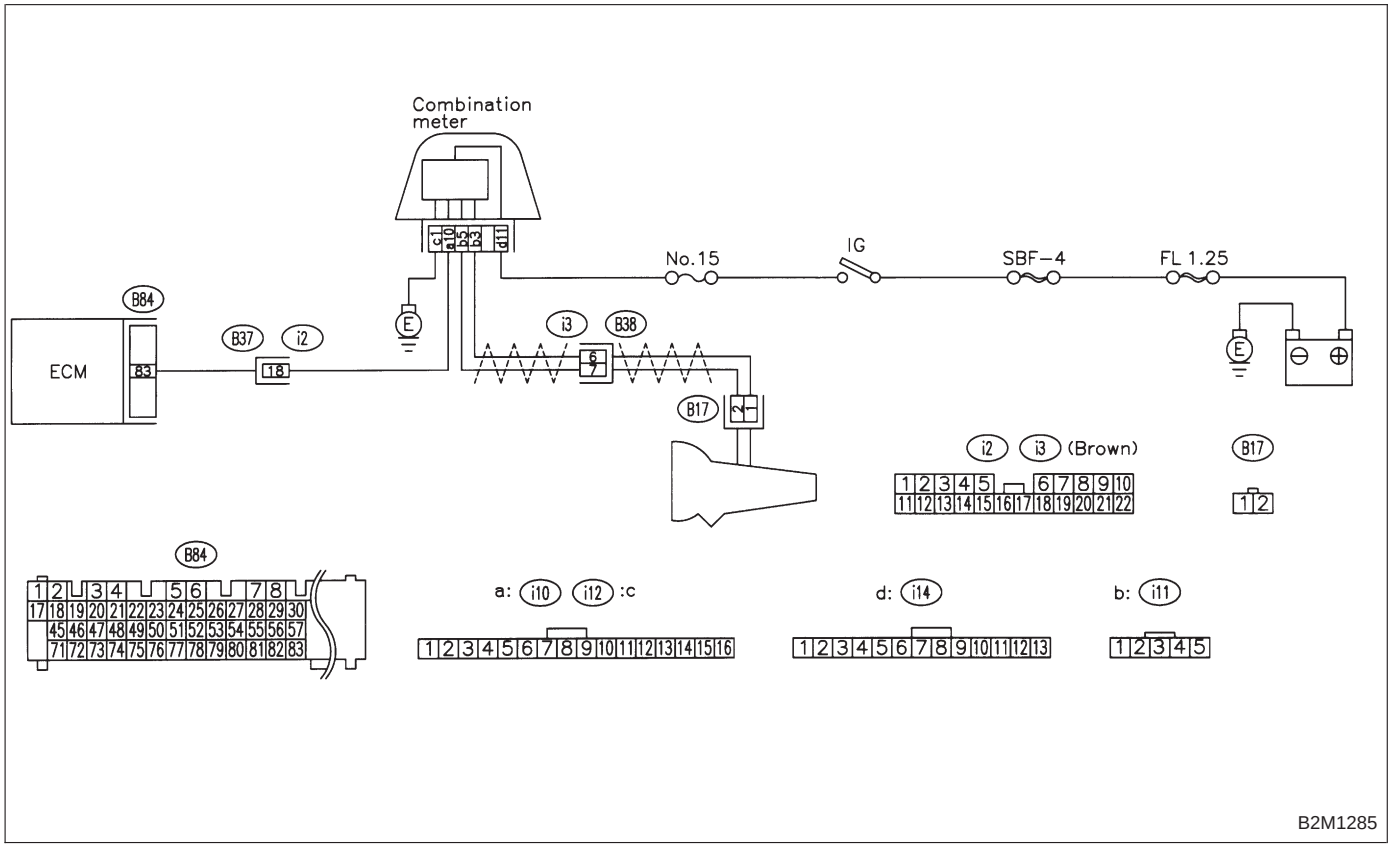

NOTE:
Check vehicle speed sensor 2 circuit.
<Ref. to 2-7 [T10CX0].>

OBD	(FB1)
P1700	<ATTH>

OBD0501

CV: DTC P1700 — THROTTLE POSITION SENSOR CIRCUIT MALFUNCTION —

WIRING DIAGRAM:

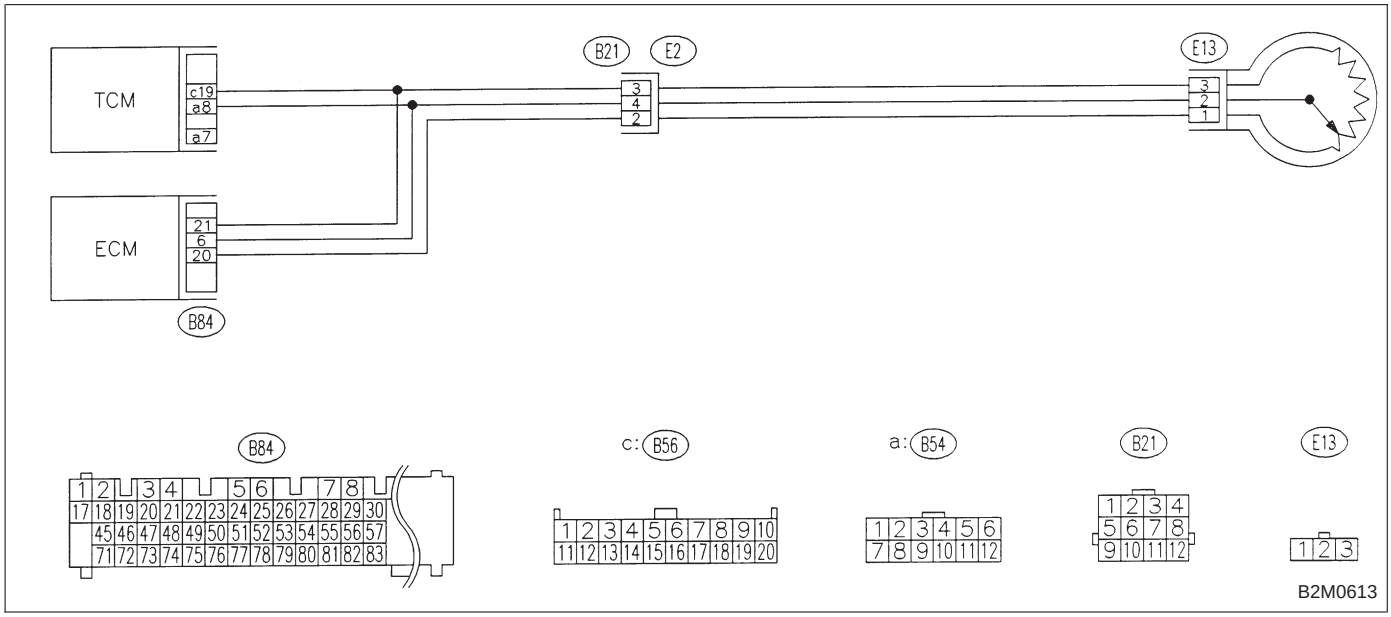

NOTE:
Check throttle position sensor circuit for automatic transmission.
<Ref. to 2-7 [T10CY0].>

OBD (FB1)
P1701 <ATCRS>

B2M0669

CW: DTC P1701
— CRUISE CONTROL SET SIGNAL CIRCUIT MALFUNCTION —

WIRING DIAGRAM:

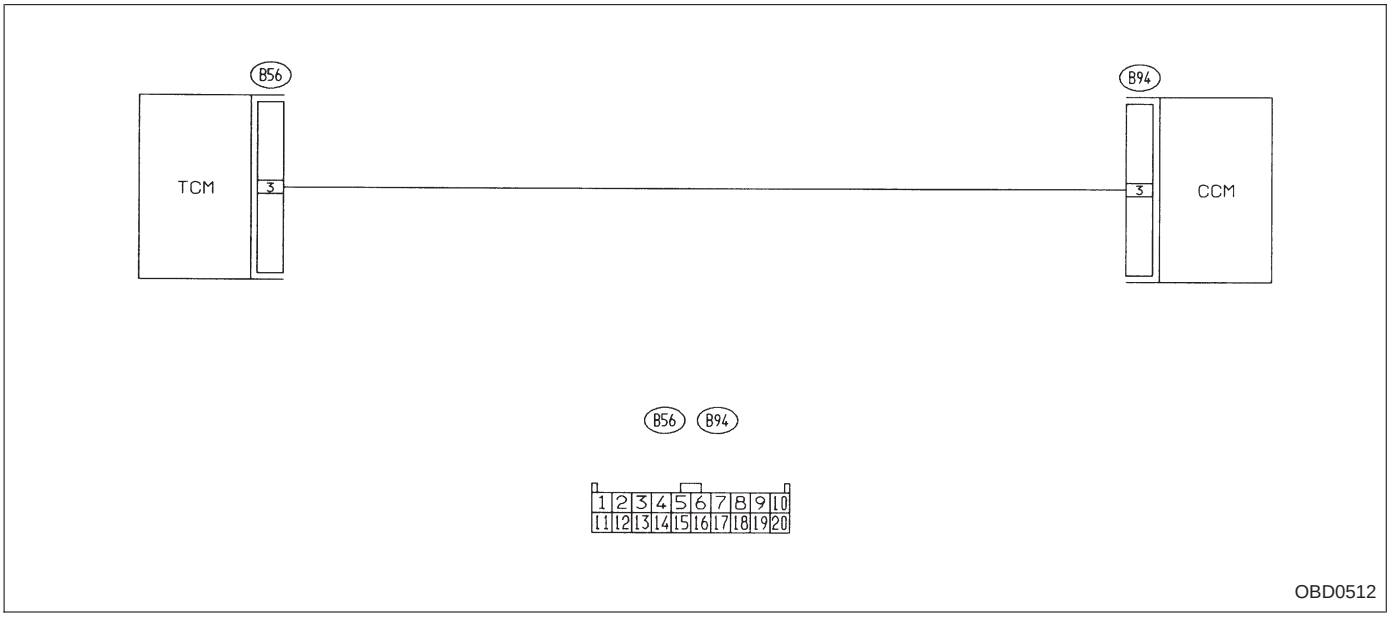

NOTE:
Check cruise control set signal circuit.
<Ref. to 2-7 [T10CZ0].>

OBD (FB1)

P1702<ATDIAG_LO>

B2M1143

CX: DTC P1702 — AUTOMATIC TRANSMISSION DIAGNOSIS INPUT SIGNAL CIRCUIT LOW INPUT —

WIRING DIAGRAM:

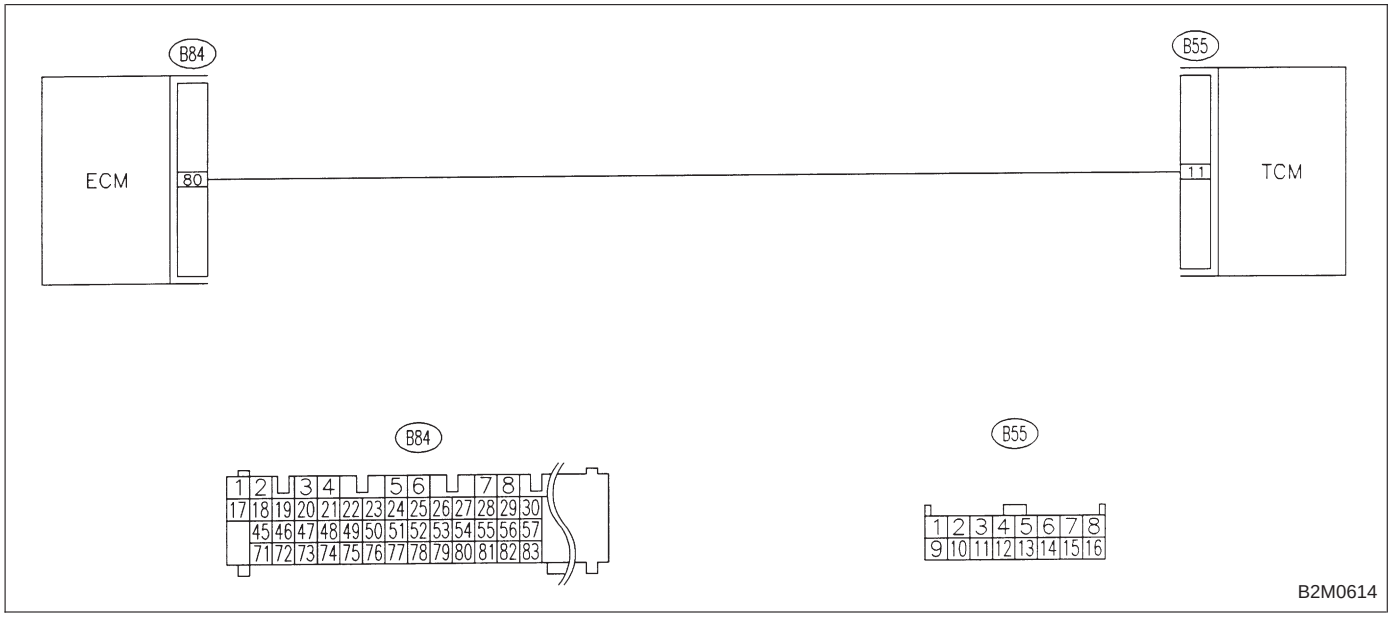

NOTE:
Check automatic transmission diagnosis input signal circuit.
<Ref. to 2-7 [T10DA0].>

OBD (FB1)

P1722<ATDIAG_HI>

B2M1144

CY: DTC P1722 — AUTOMATIC TRANSMISSION DIAGNOSIS INPUT SIGNAL CIRCUIT HIGH INPUT —

WIRING DIAGRAM:

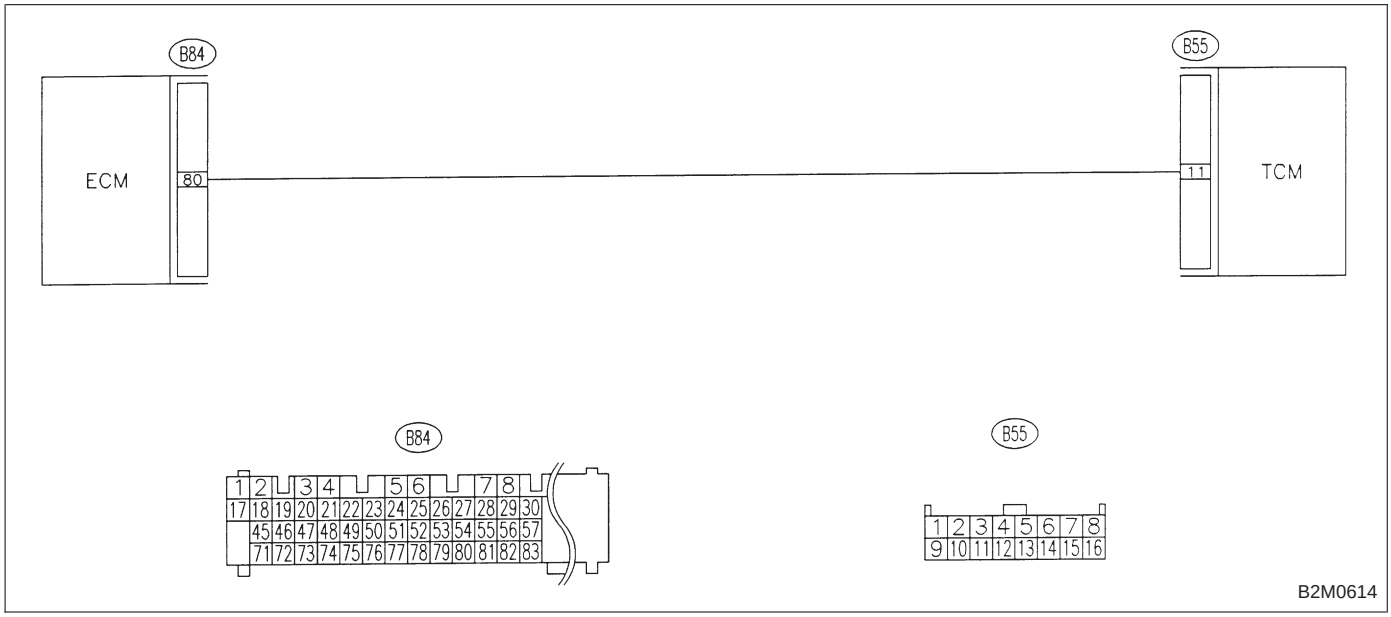

NOTE:
Check automatic transmission diagnosis input signal circuit.
<Ref. to 2-7 [T10DB0].>

OBD (FB1)

P1742 <ATDIAG_2>

B2M1147

CZ: DTC P1742
— AUTOMATIC TRANSMISSION DIAGNOSIS INPUT SIGNAL CIRCUIT MALFUNCTION —

WIRING DIAGRAM:

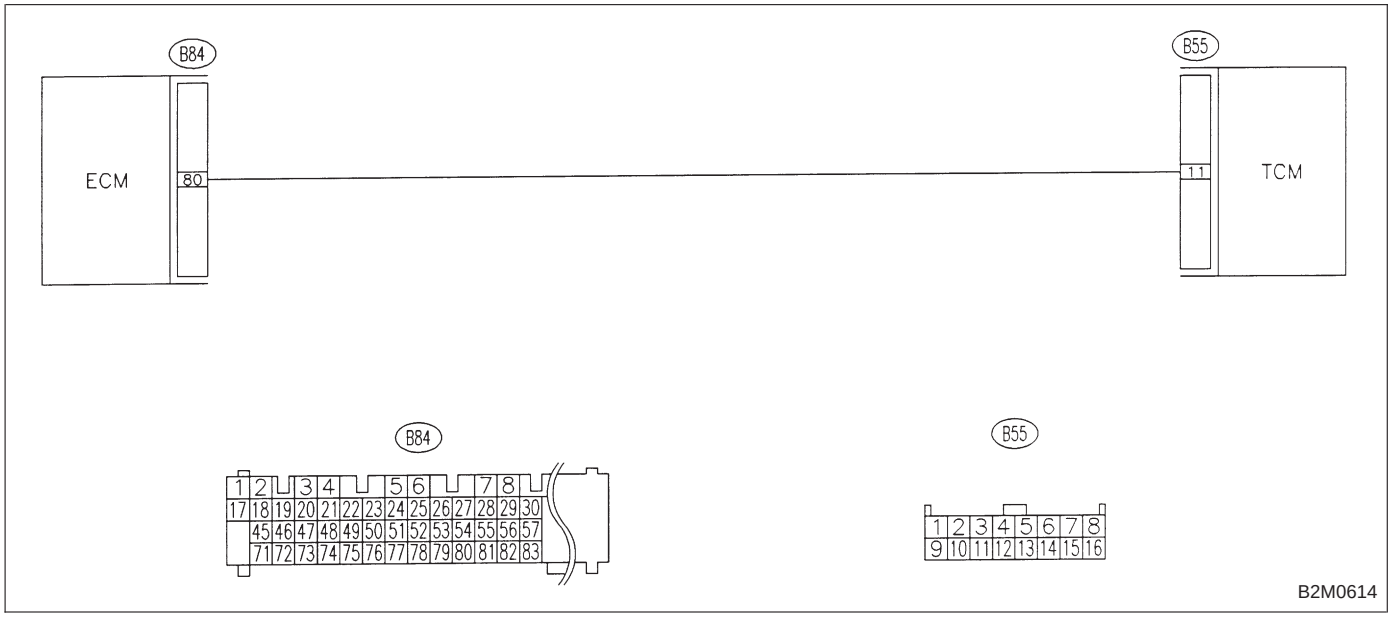

NOTE:
Check automatic transmission diagnosis input signal circuit.
<Ref. to 2-7 [T10DC0].>