7. Diagnostics for CHECK ENGINE Malfunction Indicator Lamp (MIL)

A: CHECK ENGINE MALFUNCTION INDICATOR LAMP (MIL) DOES NOT COME ON.

DIAGNOSIS:

● The CHECK ENGINE malfunction indicator lamp (MIL) circuit is open or shorted.

TROUBLE SYMPTOM:

● When ignition switch is turned ON (engine OFF), MIL does not come on.

WIRING DIAGRAM:

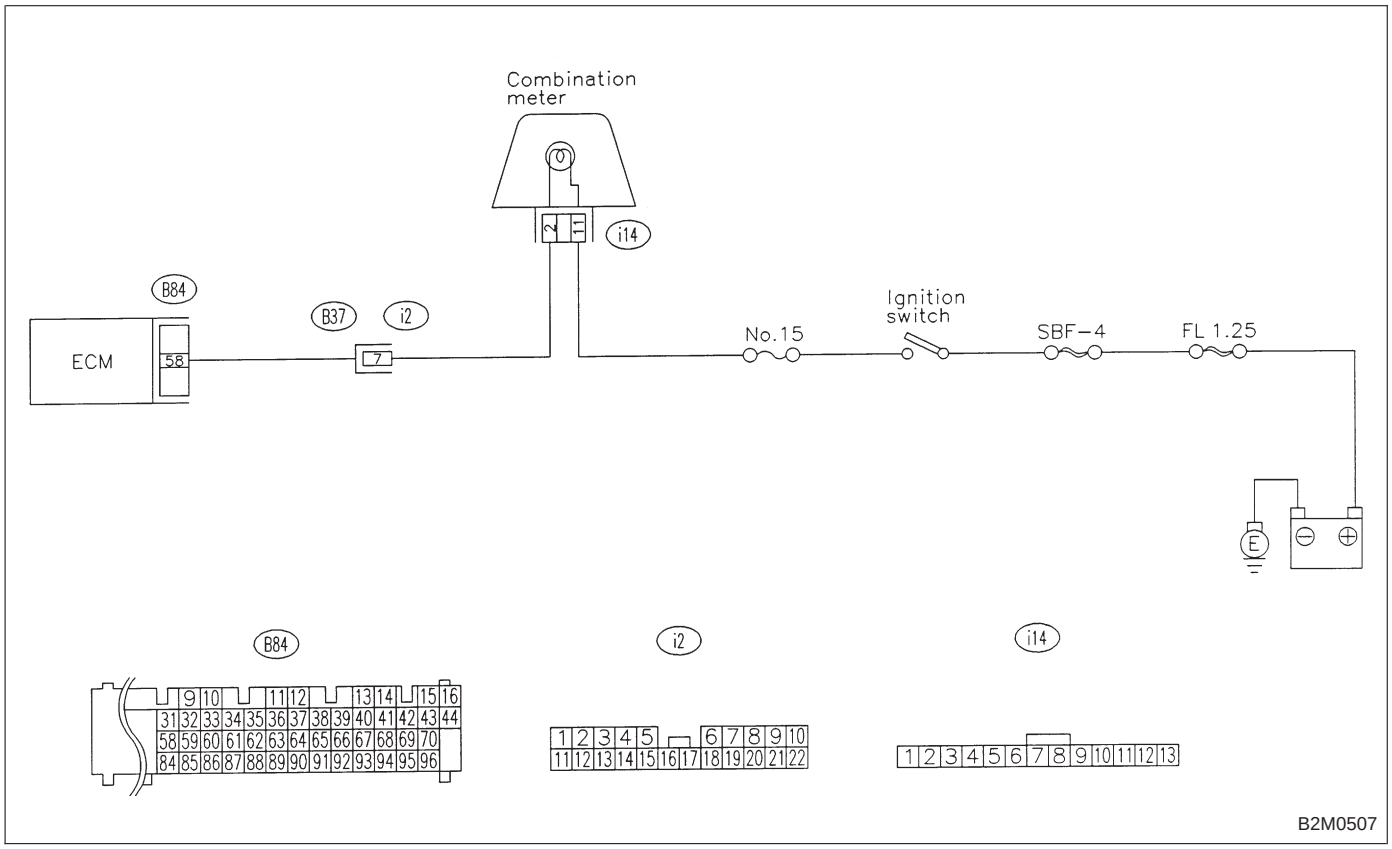

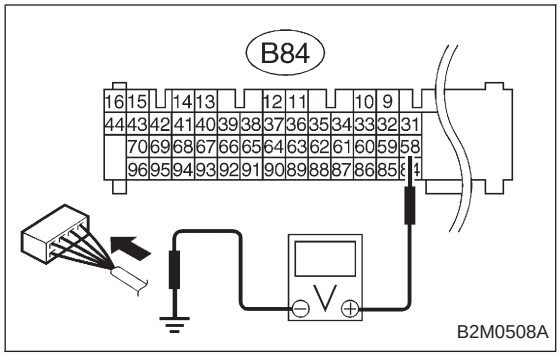

7A1	CHECK OUTPUT SIGNAL FROM ECM.

1) Turn ignition switch to ON.
2) Measure voltage between ECM connector and chassis ground.

CHECK : ***Connector & terminal (B84) No. 58 (+) — Chassis ground (−): Is the voltage less than 1 V?***

YES : Go to step **7A2**.

NO : Go to next CHECK .

CHECK : ***Does the MIL come on when shaking or pulling ECM connector and harness?***

YES : Repair poor contact in ECM connector.

NO : Go to next CHECK .

CHECK : ***Is ECM connector correctly connected?***

YES : Replace ECM.

NO : Repair connection of ECM connector.

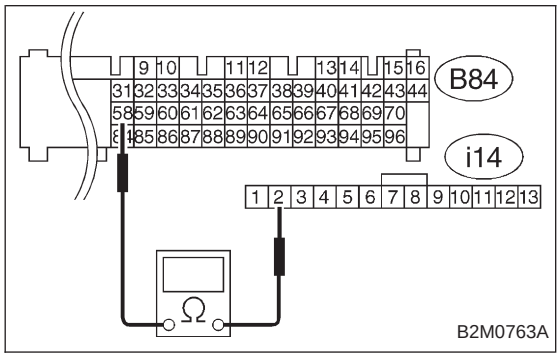

7A2	CHECK HARNESS BETWEEN COMBINATION METER AND ECM CONNECTOR.

1) Turn ignition switch to OFF.
2) Remove combination meter. <Ref. to 6-2 [W13A1].>
3) Disconnect connector from ECM and combination meter.
4) Measure resistance of harness between ECM and combination meter connector.

CHECK : ***Connector & terminal (B84) No. 58 — (i14) No. 2: Is resistance less than 1 Ω?***

YES : Go to next CHECK .

NO : Repair harness and connector.

NOTE:
In this case, repair the following:
- Open circuit in harness between ECM and combination meter connector
- Poor contact in coupling connector (B37)

CHECK : ***Is there poor contact in combination meter connector?***

YES : Repair poor contact in combination meter connector.

NO : Go to step **7A3**.

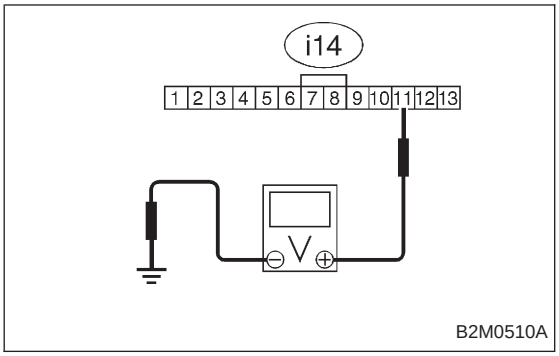

7A3	CHECK HARNESS BETWEEN COMBINATION METER AND IGNITION SWITCH CONNECTOR.

1) Turn ignition switch to ON.
2) Measure voltage between combination meter connector and chassis ground.

CHECK : ***Connector & terminal (i14) No. 11 (+) — Chassis ground (−): Is voltage more than 10 V?***

YES : Go to next CHECK .

NO : Check the following and repair if necessary.

- Blown out fuse (No. 15).

NOTE:
If replaced fuse (No. 15) blows easily, check the harness for short circuit of harness between fuse (No. 15) and combination meter connector.

- Open or short circuit in harness between fuse (No. 15) and combination meter connector
- Open or short circuit in harness between fuse (No. 15) and ignition switch connector
- Poor contact in ignition switch connector

CHECK : ***Is there poor contact in combination meter connector?***

YES : Repair poor contact in combination meter connector.

NO : Replace bulb or combination meter.

B: CHECK ENGINE MALFUNCTION INDICATOR LAMP (MIL) DOES NOT GO OFF.

DIAGNOSIS:

● The CHECK ENGINE malfunction indicator lamp (MIL) circuit is shorted.

TROUBLE SYMPTOM:

● Although MIL comes on when engine runs, trouble code is not shown on Subaru select monitor or OBD-II general scan tool display.

WIRING DIAGRAM:

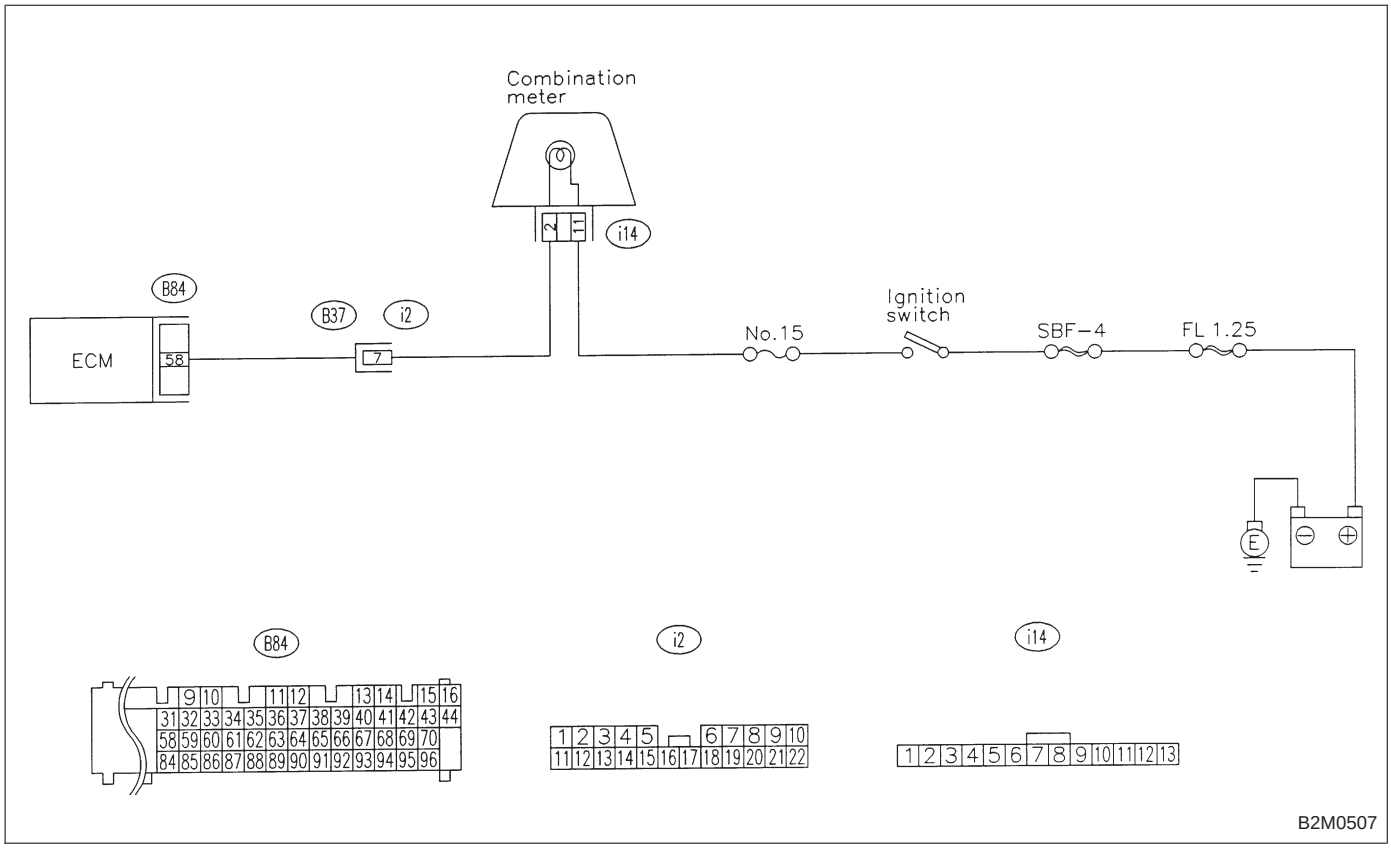

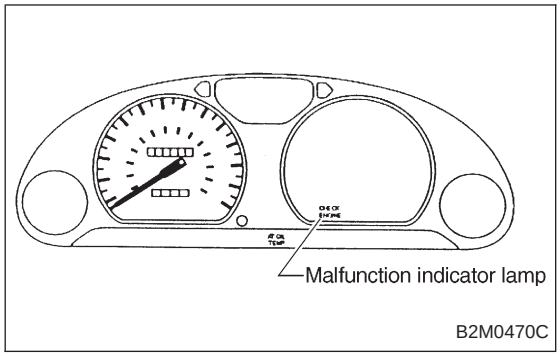

7B1	CHECK HARNESS BETWEEN COMBINATION METER AND ECM CONNECTOR.

1) Turn ignition switch to OFF.
2) Disconnect connector from ECM.
3) Turn ignition switch to ON.

CHECK ***: Does the MIL come on?***

YES : Repair ground short circuit in harness between combination meter and ECM connector.

NO : Replace ECM.

C: CHECK ENGINE MALFUNCTION INDICATOR LAMP (MIL) DOES NOT BLINK AT A CYCLE OF 3 HZ.

DIAGNOSIS:

- The CHECK ENGINE malfunction indicator lamp (MIL) circuit is open or shorted.
- Test mode connector circuit is in open.

TROUBLE SYMPTOM:

- When inspection mode, MIL does not blink at a cycle of 3 Hz.

WIRING DIAGRAM:

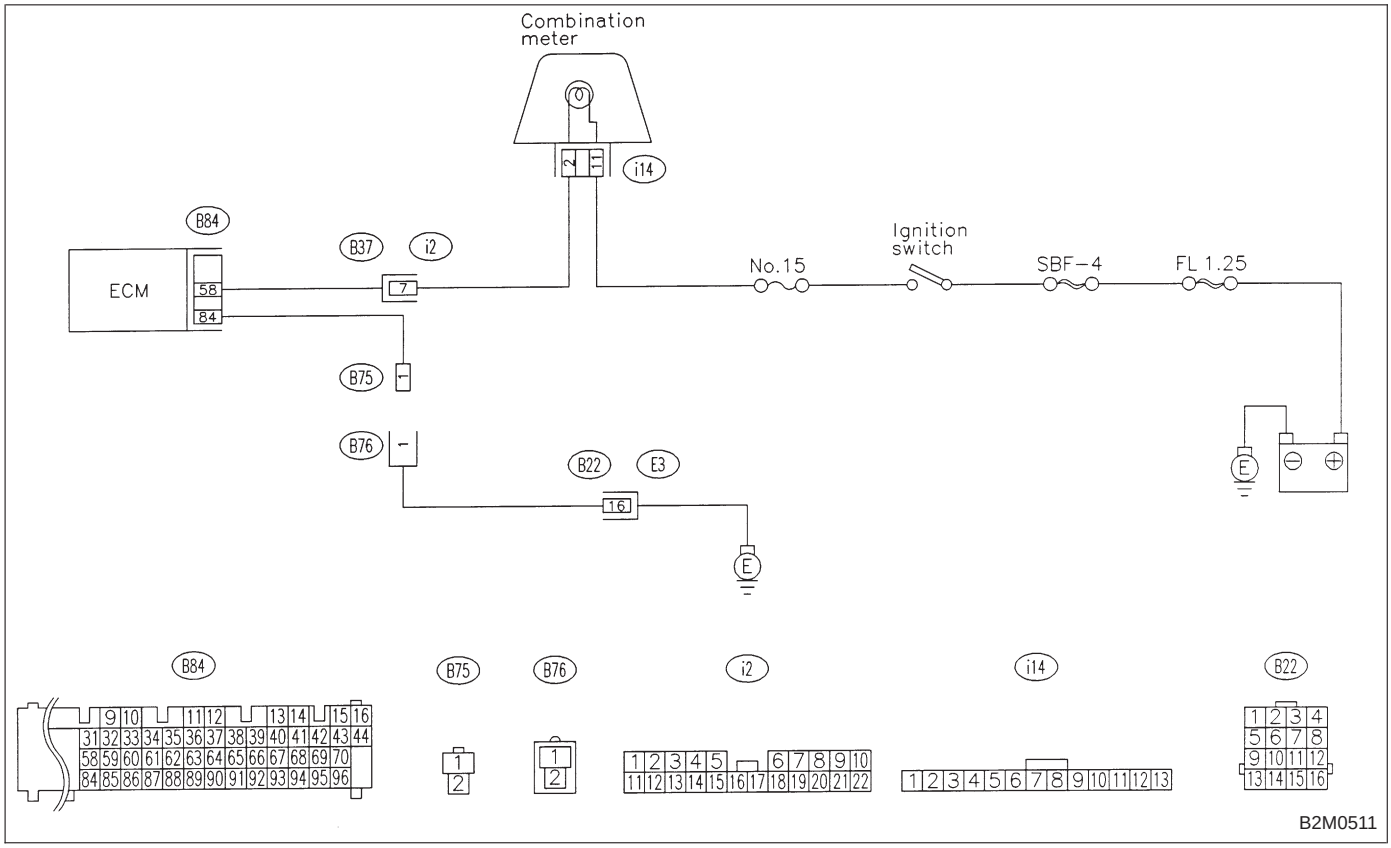

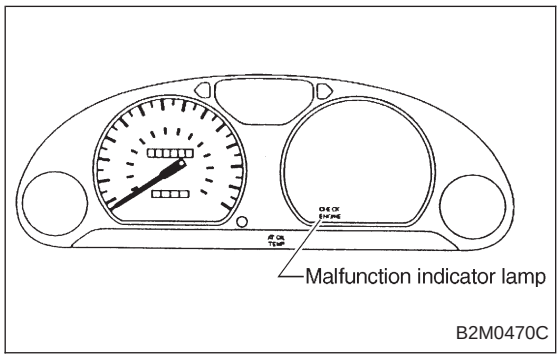

7C1	CHECK OPERATION OF CHECK ENGINE MALFUNCTION INDICATOR LAMP (MIL).

1) Turn ignition switch to OFF.
2) Disconnect test mode connector.
3) Turn ignition switch to ON.

CHECK : ***Does the MIL come on?***

YES : Go to step **7C2**.

NO : Repair the MIL circuit. <Ref. to 2-7 [T7A0].>

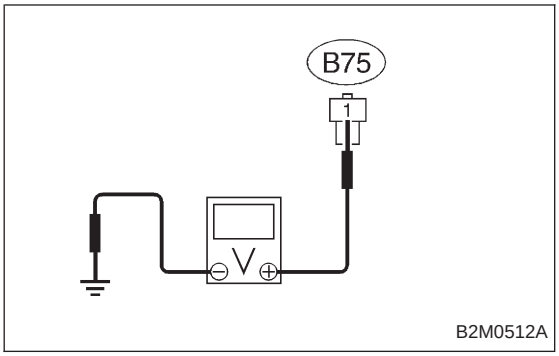

7C2	CHECK OUTPUT SIGNAL FROM ECM.

Measure voltage between test mode connector and chassis ground.

CHECK : ***Connector & terminal (B75) No.1 (+) — Chassis ground (−): Is voltage less than 1 V?***

YES : Go to step **7C3**.

NO : Go to step **7C4**.

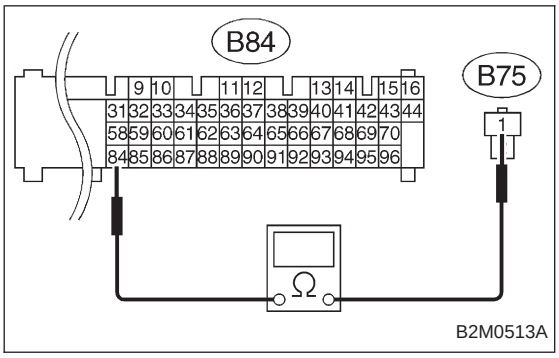

7C3	CHECK HARNESS BETWEEN ECM AND TEST MODE CONNECTOR.

1) Turn ignition switch to OFF.
2) Disconnect connector from ECM.
3) Measure resistance of harness between ECM and test mode connector.

CHECK : ***Connector & terminal (B84) No.84 — (B75) No.1: Is resistance less than 1 Ω?***

YES : Go to next CHECK .

NO : Repair open circuit in harness between ECM and test mode connector.

CHECK : ***Is there poor contact in ECM connector?***

YES : Repair poor contact in ECM connector.

NO : Replace ECM.

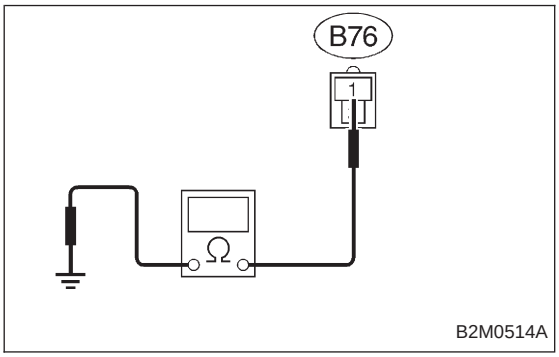

7C4	CHECK GROUND CIRCUIT.

1) Turn ignition switch to OFF.
2) Measure resistance of harness between test mode connector and chassis ground.

CHECK : ***Connector & terminal (B76) No.1 — Chassis ground: Is resistance less than 5 Ω?***

YES : Repair poor contact in test mode connector.

NO : Repair harness and connector.

NOTE:
In this case, repair the following:
- Open circuit in harness between test mode and coupling connector (B22)
- Open circuit in harness between coupling connector (B22) and engine grounding terminal
- Poor contact in coupling connector (B22)

D: CHECK ENGINE MALFUNCTION INDICATOR LAMP (MIL) REMAINS BLINKING AT A CYCLE OF 3 Hz.

DIAGNOSIS:

- Test mode connector circuit is shorted.

TROUBLE SYMPTOM:

- Even though test mode connector is disconnected, MIL blinks at a cycle of 3 Hz when ignition switch is turned to ON.

WIRING DIAGRAM:

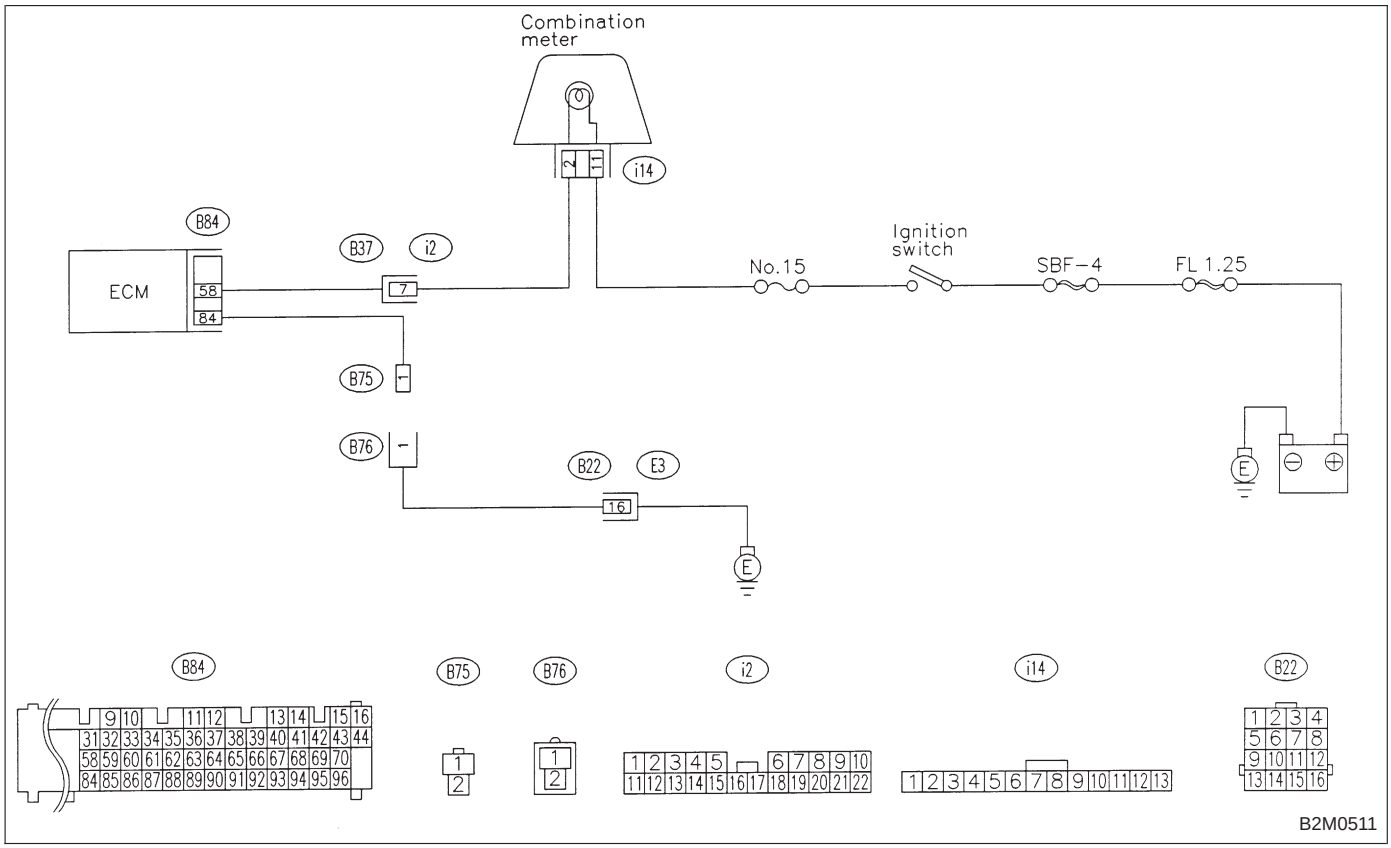

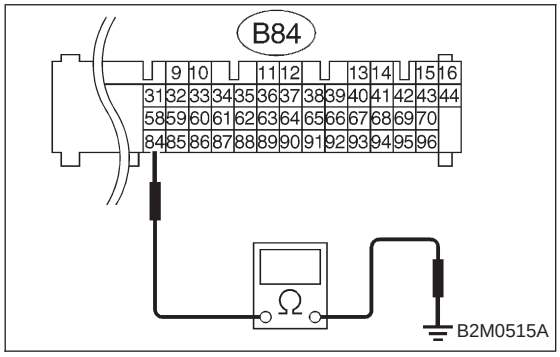

7D1	CHECK HARNESS BETWEEN ECM CONNECTOR AND ENGINE GROUNDING TERMINAL.

1) Turn ignition switch to OFF.
2) Disconnect connector from ECM.
3) Measure resistance of harness between ECM connector and chassis ground.

CHECK : ***Connector & terminal (B84) No.84 — Chassis ground: Is resistance less than 5 Ω?***

YES : Repair short circuit in harness between ECM and test mode connector.

NO : Replace ECM.