8. Diagnostics for Engine Starting Failure

A: BASIC DIAGNOSTICS CHART

Inspection of starter motor circuit.

↓

Inspection of ECM power supply and ground line.

↓

Inspection of ignition control system.

↓

Inspection of fuel pump circuit.

↓

Inspection of fuel injector circuit.

↓

Inspection of crankshaft position sensor circuit.

↓

Inspection of camshaft position sensor circuit.

↓

Inspection using Subaru select monitor or OBD-II general scan tool or inspection using “9. General Diagnostics Table. <Ref. to 2-7 [T900].>

B: STARTER MOTOR CIRCUIT

WIRING DIAGRAM:

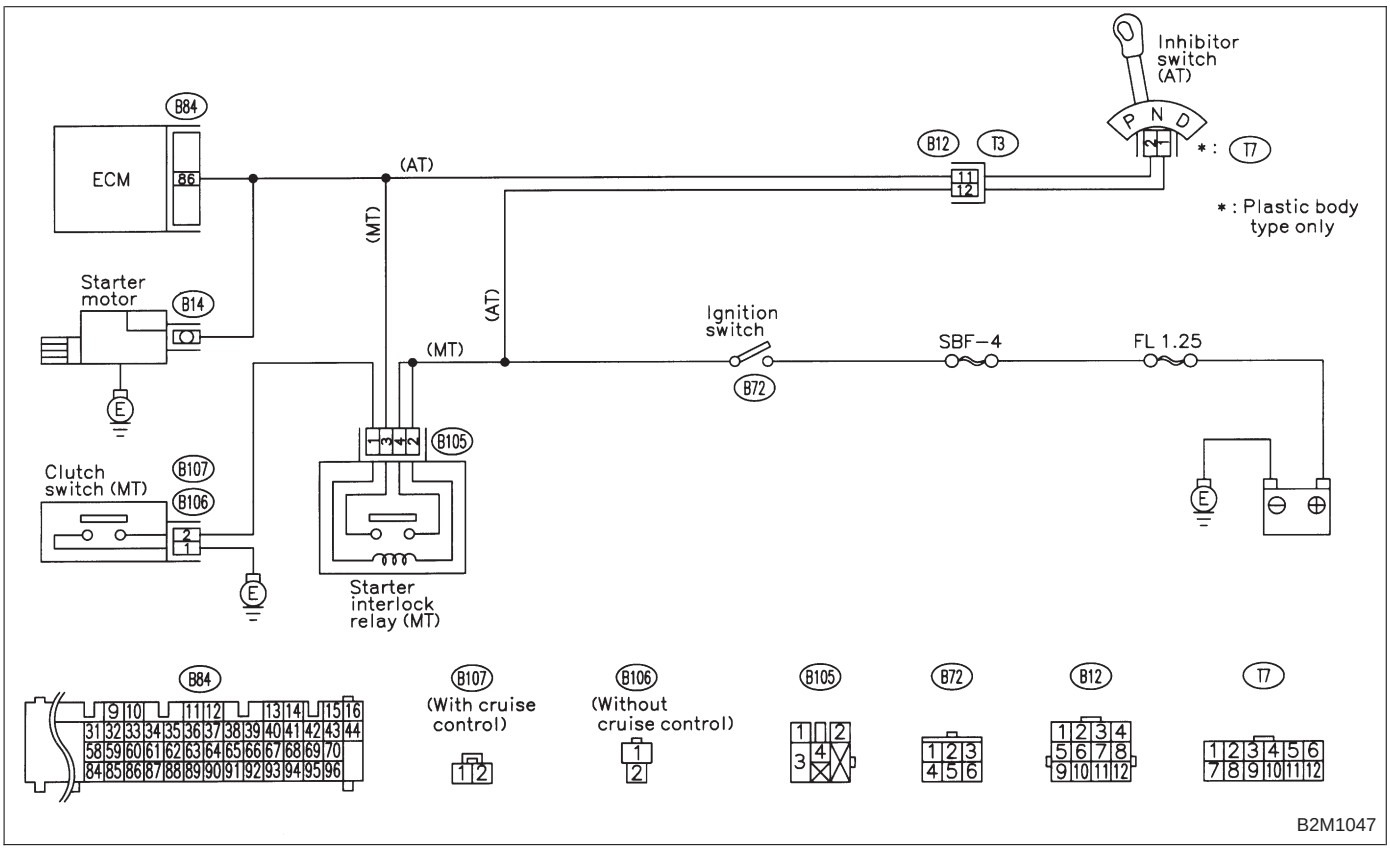

CAUTION:
After repair or replacement of faulty parts, conduct CLEAR MEMORY and INSPECTION MODES.
<Ref. to 2-7 [T3D0] and [T3E0].>

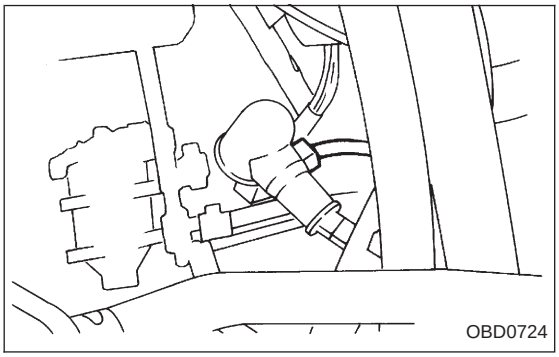

8B1	CHECK INPUT SIGNAL FOR STARTER MOTOR.

1) Turn ignition switch to OFF.
2) Disconnect connector from starter motor.
3) Turn ignition switch to ST.

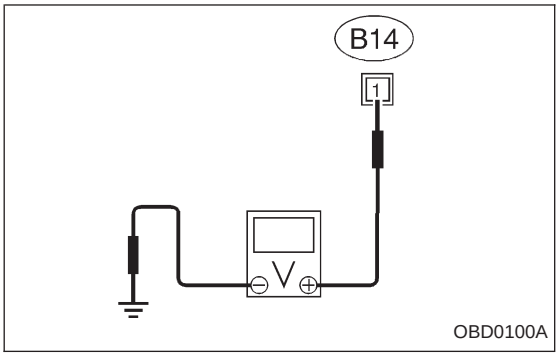

4) Measure power supply voltage between starter motor connector terminal and engine ground.

CHECK : ***Connector & terminal (B14) No. 1 (+) — Engine ground (−): Is the voltage more than 10 V?***

NOTE:
- On AT vehicles, place the selector lever in the “P” or “N” position.
- On MT vehicles, depress the clutch pedal.

YES : Go to step **8B2**.

NO : Go to step **8B3**.

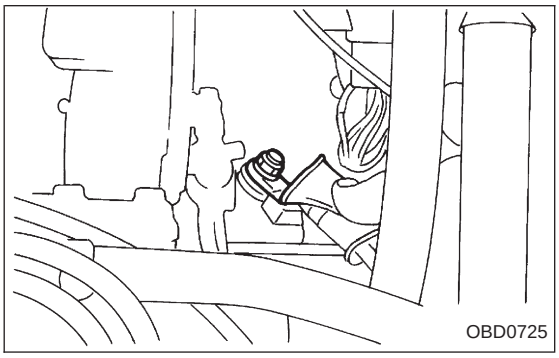

8B2	CHECK GROUND CIRCUIT OF STARTER MOTOR.

1) Turn ignition switch to OFF.
2) Disconnect terminal from starter motor.
3) Measure resistance of ground cable between ground cable terminal and engine ground.

CHECK : ***Is resistance less than 5 Ω?***

YES : Check starter motor. <Ref. to 6-1 [K100].>

NO : Repair open circuit of ground cable.

8B3	CHECK HARNESS BETWEEN BATTERY AND IGNITION SWITCH CONNECTOR.

1) Turn ignition switch to OFF.
2) Remove SBF No. 4 from main fuse box.
3) Measure resistance of fuse.

CHECK : ***Is resistance less than 1 Ω?***

NO : Replace SBF No. 4.

YES : Go to next step 4).

4) Install SBF No. 4 to main fuse box.
5) Turn ignition switch to ON.

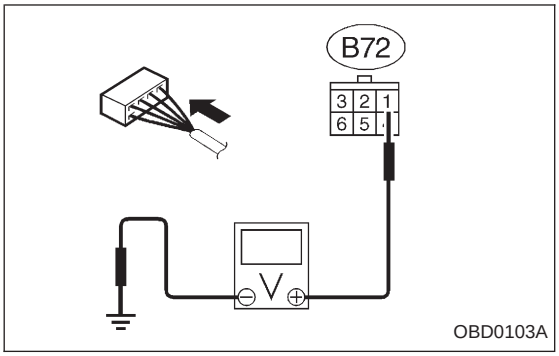

6) Measure power supply voltage between ignition switch connector and chassis ground.

CHECK : ***Connector & terminal (B72) No. 1 (+) — Chassis ground (−): Is the voltage more than 10 V?***

YES : Go to step **8B4**.

NO : Repair open circuit in harness between ignition switch and SBF No. 4 connector.

8B4	CHECK TRANSMISSION TYPE.

CHECK : ***Is transmission type AT?***

YES : Go to step **8B5**.

NO : Go to step **8B9**.

8B5	CHECK INHIBITOR SWITCH TYPE.

CHECK : ***Is inhibitor switch type plastic body?***

YES : Go to step **8B6**.

NO : Go to step **8B8**.

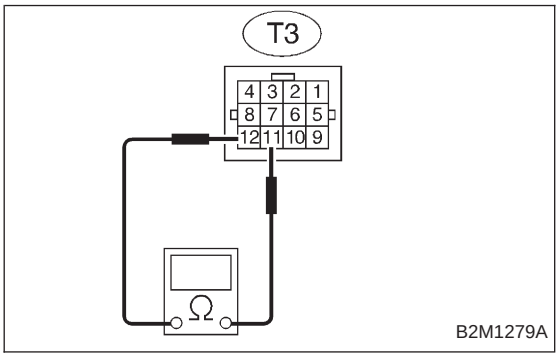

8B6	CHECK INHIBITOR SWITCH.

1) Turn ignition switch to OFF.
2) Place the selector lever in the “P” or “N” position.
3) Measure resistance between transmission harness connector receptacle’s terminals.

CHECK : ***Connector & terminal (T3) No. 11 — No. 12: Is the resistance less than 1 Ω?***

YES : Repair open circuit in harness between starter motor and ignition switch connector.

NO : Go to step **8B7**.

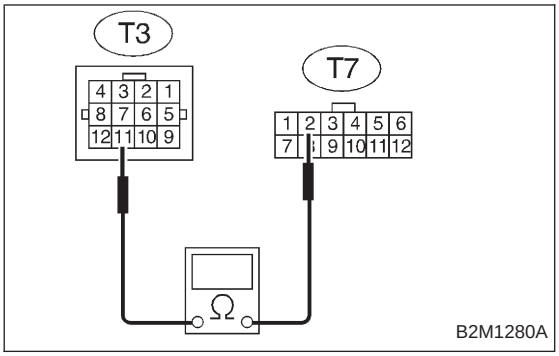

8B7	CHECK TRANSMISSION HARNESS.

1) Disconnect connector from inhibitor switch.
2) Measure resistance of harness between transmission harness and inhibitor switch connector.

CHECK : ***Connector & terminal (T3) No. 11 — (T7) No. 2: Is the resistance less than 1 Ω?***

YES : Go to next CHECK .

NO : Repair open circuit in harness between transmission harness and inhibitor switch connector.

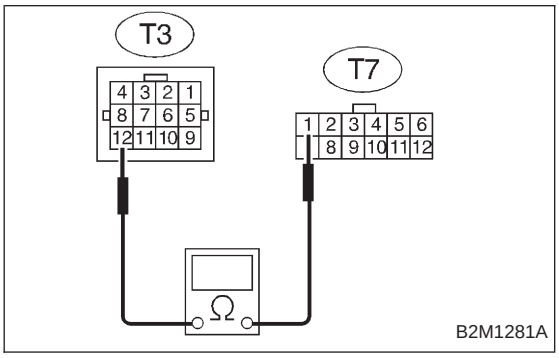

CHECK : ***Connector & terminal (T3) No. 12 — (T7) No. 1: Is the resistance less than 1 Ω?***

YES : Go to next CHECK .

NO : Repair open circuit in harness between transmission harness and inhibitor switch connector.

CHECK : ***Is there poor contact in inhibitor switch connector?***

YES : Repair poor contact in inhibitor switch connector.

NO : Replace inhibitor switch.

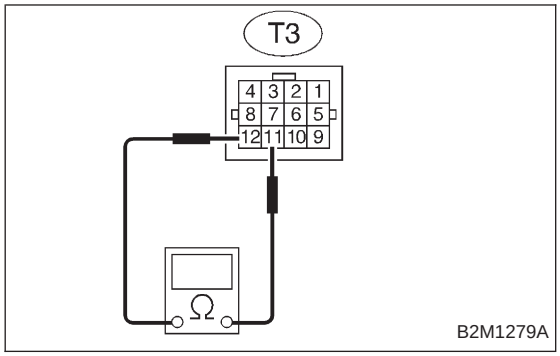

8B8	CHECK INHIBITOR SWITCH.

1) Turn ignition switch to OFF.
2) Place the selector lever in the “P” or “N” position.
3) Disconnect connector from transmission harness connector.
4) Measure resistance between transmission harness connector receptacle’s terminals.

CHECK : ***Connector & terminal***
(T3) No. 11 — No. 12:
Is the resistance less than 1 Ω?

YES : Repair open circuit in harness between starter motor and ignition switch connector.

NO : Replace inhibitor switch.

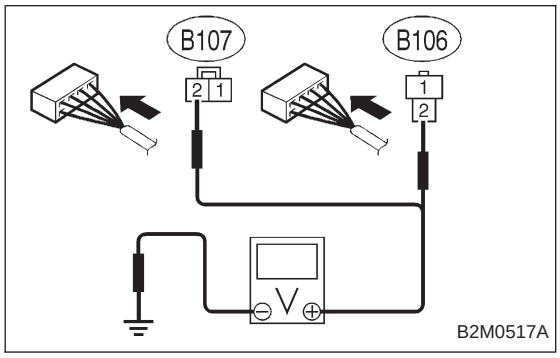

8B9	CHECK STARTER INTERLOCK CIRCUIT.

1) Turn ignition switch to “ST”.
2) Measure voltage between clutch switch connector and chassis ground.

CHECK : ***Connector & terminal***
● With cruise control
(B107) No. 2 (+) — Chassis ground (−):
● Without cruise control
(B106) No. 2 (+) — Chassis ground (−):
Is the voltage more than 10 V?

NO : Replace starter interlock relay.

YES : Go to next step 3).

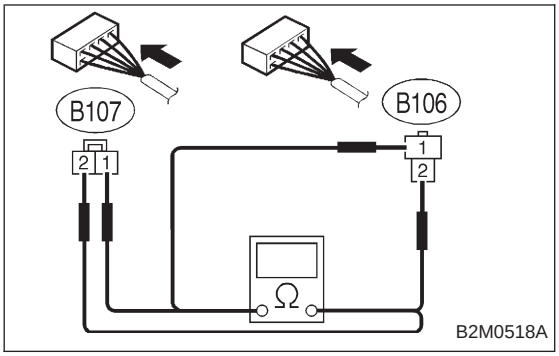

3) Turn ignition switch to OFF.
4) Measure resistance between clutch switch connector terminals while depressing the clutch pedal.

CHECK ***: Connector & terminal***
● With cruise control
(B107) No. 1 — No. 2:
● Without cruise control
(B106) No. 1 — No. 2:
Is the resistance less than 10 Ω?

YES : Repair open circuit in harness between starter motor and ignition switch connector.

NO : Replace clutch switch.

C: CONTROL MODULE POWER SUPPLY AND GROUND LINE

WIRING DIAGRAM:

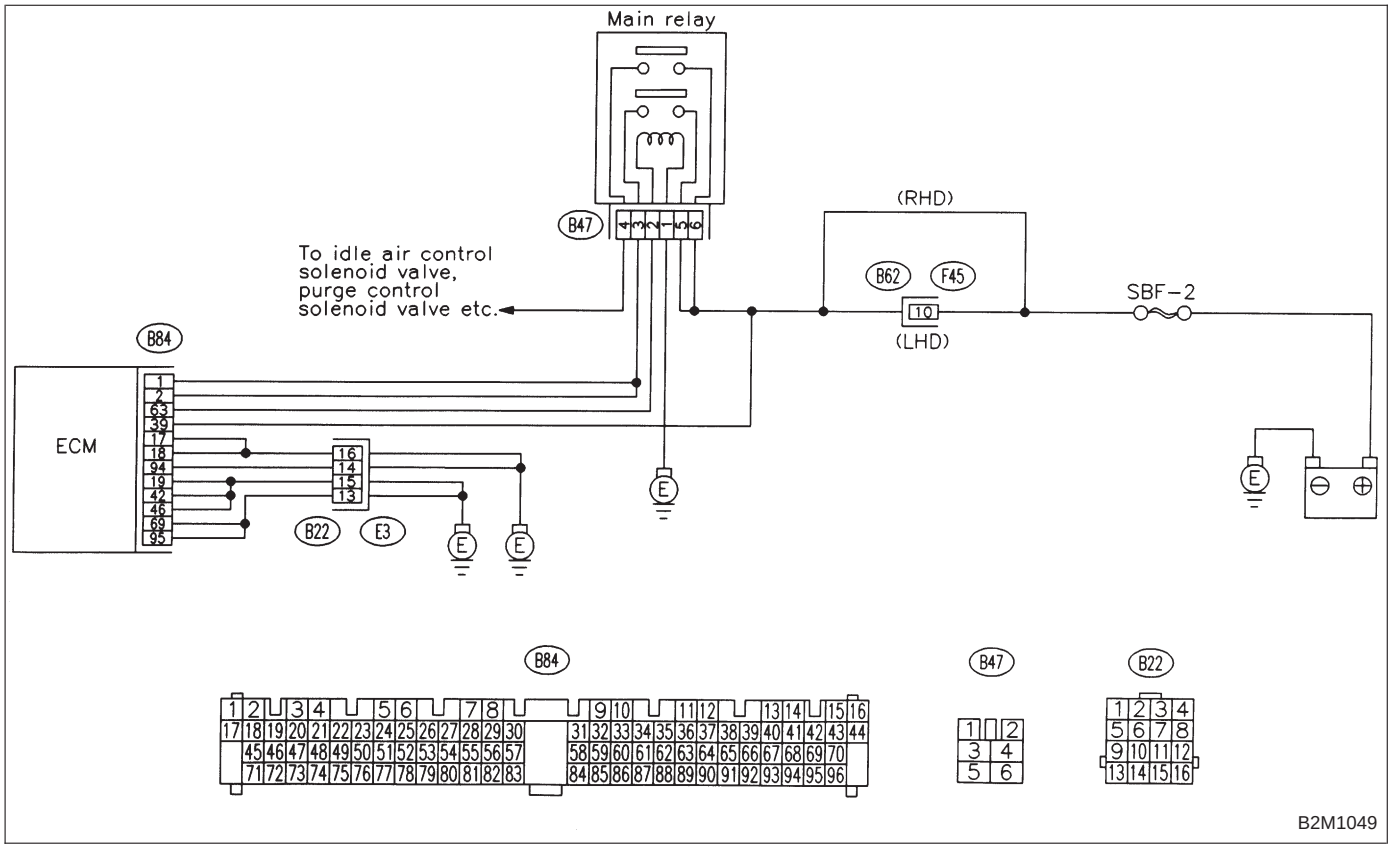

CAUTION:
After repair or replacement of faulty parts, conduct CLEAR MEMORY and INSPECTION MODES.
<Ref. to 2-7 [T3D0] and [T3E0].>

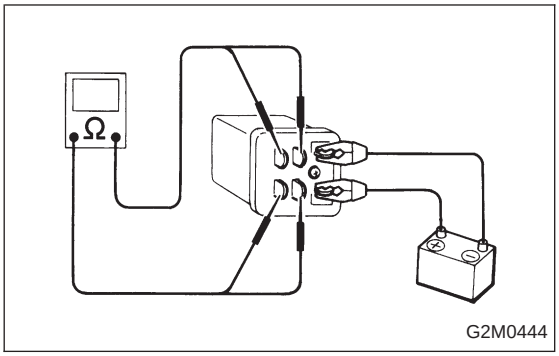

8C1	CHECK MAIN RELAY.

1) Turn the ignition switch to OFF.
2) Remove main relay.
3) Connect battery to main relay terminals No. 1 and No. 2.
4) Measure resistance between main relay terminals.

CHECK : ***Terminals No. 3 — No. 5: Is the resistance less than 10 Ω?***

YES : Go to next CHECK .

YES : Replace main relay.

CHECK : ***Terminals No. 4 — No. 6: Is the resistance less than 10 Ω?***

YES : Go to step **8C2**.

NO : Replace main relay.

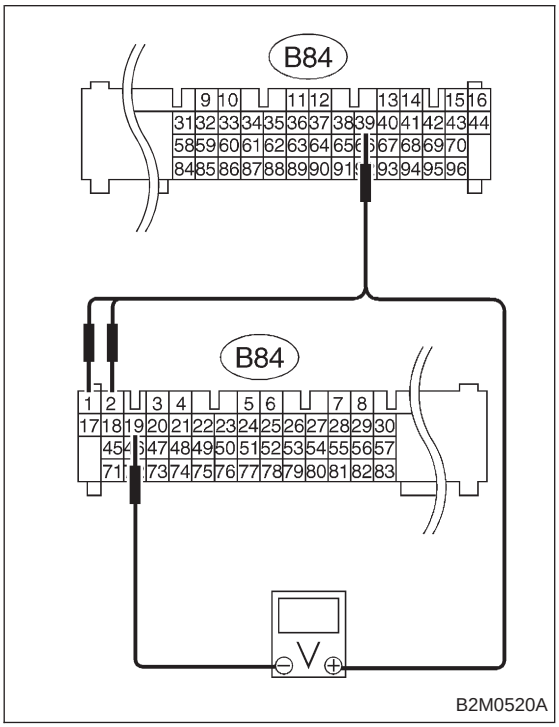

8C2	CHECK POWER SUPPLY CIRCUIT OF ECM.

1) Install main relay.
2) Disconnect connectors from ECM.
3) Turn ignition switch to ON.
4) Measure power supply voltage between ECM connector terminals.

CHECK : ***Connector & terminal (B84) No. 1 (+) — No. 19 (−): Is the voltage more than 10 V?***

YES : Go to next CHECK .

NO : Repair open or ground short circuit in harness of power supply circuit.

CHECK : ***Connector & terminal (B84) No. 2 (+) — No. 19 (−): Is the voltage more than 10 V?***

YES : Go to next CHECK .

NO : Repair open or ground short circuit in harness of power supply circuit.

CHECK : ***Connector & terminal (B84) No. 39 (+) — No. 19 (−): Is the voltage more than 10 V?***

YES : Go to step **8C3**.

NO : Repair open or ground short circuit in harness of power supply circuit.

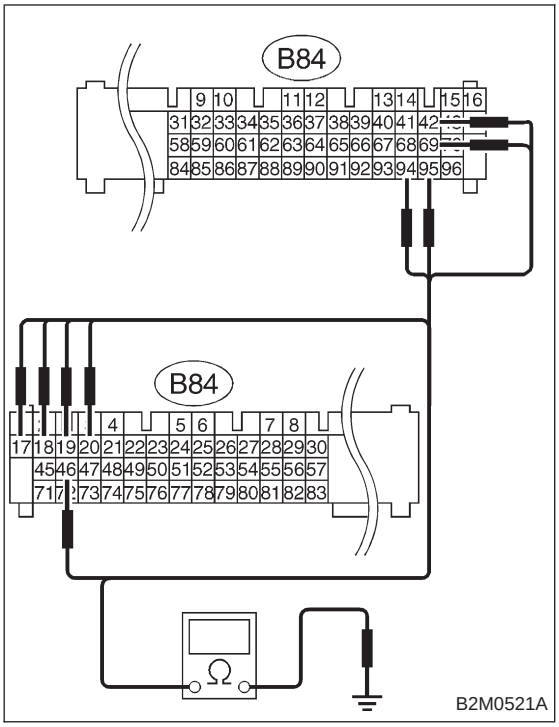

8C3	CHECK GROUND CIRCUIT OF ECM.

1) Turn ignition switch to OFF.
2) Measure resistance of harness connector between ECM and chassis ground.

CHECK : ***Connector & terminal (B84) No. 17 — Chassis ground: Is the resistance less than 5 Ω?***

YES : Go to next CHECK .

NO : Repair open circuit in harness between ECM connector and engine grounding terminal.

CHECK : ***Connector & terminal (B84) No. 18 — Chassis ground: Is the resistance less than 5 Ω?***

YES : Go to next CHECK .

NO : Repair open circuit in harness between ECM connector and engine grounding terminal.

CHECK : ***Connector & terminal (B84) No. 19 — Chassis ground: Is the resistance less than 5 Ω?***

YES : Go to next CHECK .

NO : Repair open circuit in harness between ECM connector and engine grounding terminal.

CHECK : ***Connector & terminal (B84) No. 20 — Chassis ground: Is the resistance less than 5 Ω?***

YES : Go to next CHECK .

NO : Repair open circuit in harness between ECM connector and engine grounding terminal.

CHECK : ***Connector & terminal (B84) No. 42 — Chassis ground: Is the resistance less than 5 Ω?***

YES : Go to next CHECK .

NO : Repair open circuit in harness between ECM connector and engine grounding terminal.

CHECK : ***Connector & terminal (B84) No. 46 — Chassis ground: Is the resistance less than 5 Ω?***

YES : Go to next CHECK .

NO : Repair open circuit in harness between ECM connector and engine grounding terminal.

CHECK : ***Connector & terminal (B84) No. 69 — Chassis ground: Is the resistance less than 5 Ω?***

YES : Go to next CHECK .

NO : Repair open circuit in harness between ECM connector and engine grounding terminal.

CHECK : ***Connector & terminal (B84) No. 94 — Chassis ground: Is the resistance less than 5 Ω?***

YES : Go to next CHECK .

NO : Repair open circuit in harness between ECM connector and engine grounding terminal.

CHECK : ***Connector & terminal (B84) No. 95 — Chassis ground: Is the resistance less than 5 Ω?***

YES : Check ignition control system. <Ref. to 2-7 [T8D0].>

NO : Repair open circuit in harness between ECM connector and engine grounding terminal.

D: IGNITION CONTROL SYSTEM

WIRING DIAGRAM:

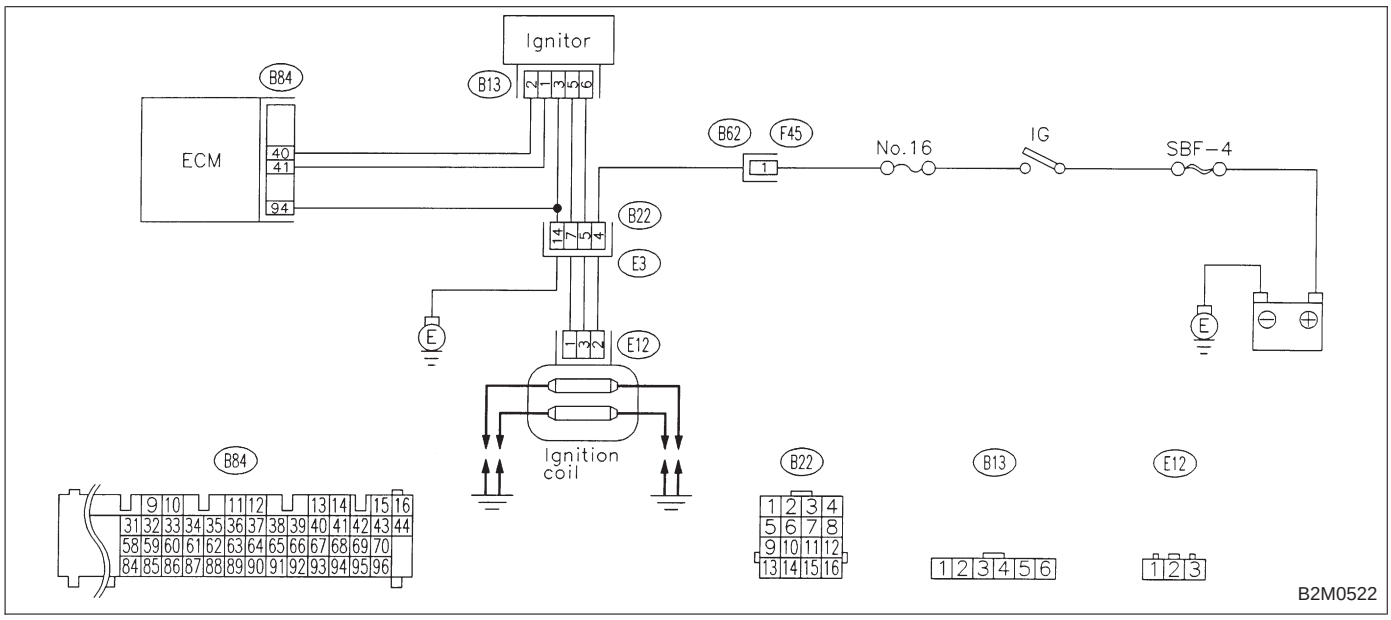

CAUTION:
After repair or replacement of faulty parts, conduct CLEAR MEMORY and INSPECTION MODES.
<Ref. to 2-7 [T3D0] and [T3E0].>

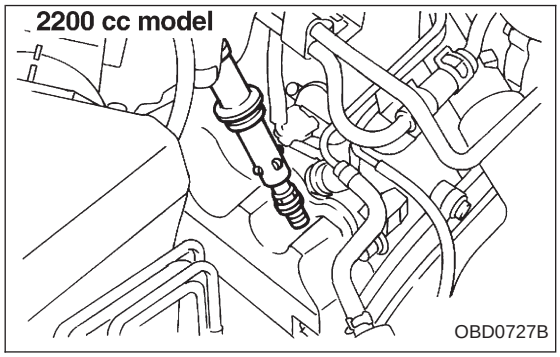

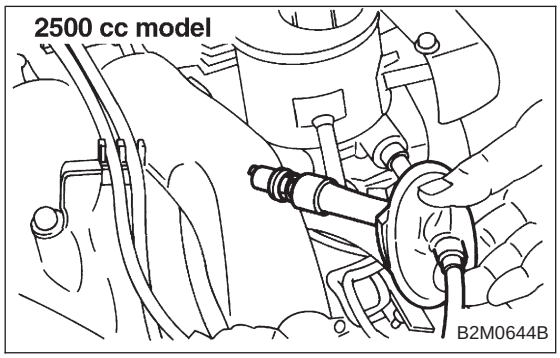

8D1	CHECK IGNITION SYSTEM FOR SPARKS.

1) Remove plug cord cap from each spark plug.
2) Install new spark plug on plug cord cap.

CAUTION:
Do not remove spark plug from engine.

3) Contact spark plug's thread portion on engine.
4) While opening throttle valve fully, crank engine to check that spark occurs at each cylinder.

CHECK ***: Does spark occur at each cylinder?***

YES : Check fuel pump system. <Ref. to 2-7 [T8E0], [T8F0].>

NO : Go to step **8D2**.

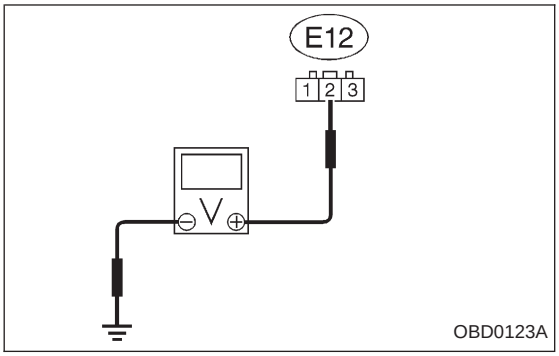

8D2	CHECK POWER SUPPLY CIRCUIT FOR IGNITION COIL.

1) Turn ignition switch to OFF.
2) Disconnect connector from ignition coil.
3) Turn ignition switch to ON.
4) Measure power supply voltage between ignition coil connector and engine ground.

CHECK : ***Connector & terminal (E12) No. 2 (+) — Engine ground (−): Is the voltage more than 10 V?***

YES : Go to step **8D3**.

NO : Repair open or ground short circuit in harness between ignition coil and ignition switch connector.

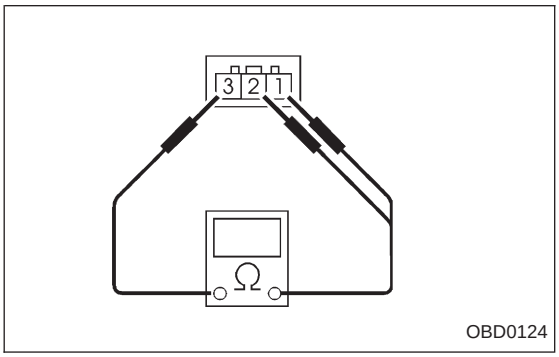

8D3	CHECK IGNITION COIL.

1) Measure resistance between ignition coil terminals to check primary coil.

CHECK : ***Terminals No. 2 — No. 1: Is the resistance between 0.4 and 1.0 Ω?***

YES : Go to next CHECK .

NO : Replace ignition coil.

CHECK : ***Terminals No. 2 — No. 3: Is the resistance between 0.4 and 1.0 Ω?***

NO : Replace ignition coil.

YES : Go to next step 2).

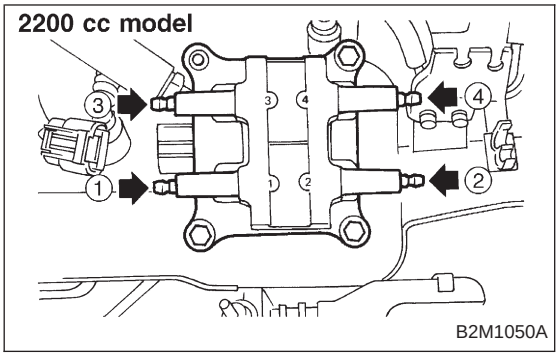

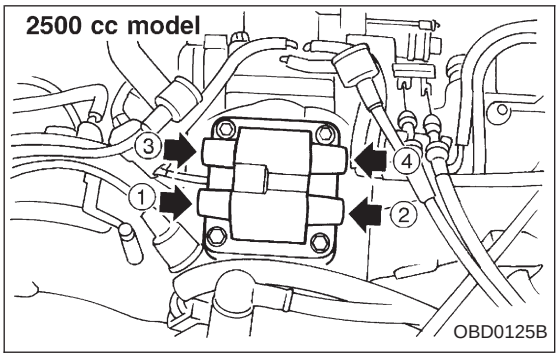

2) Measure resistance between spark plug cord contact portions to check secondary coil.

CHECK : ***Terminals #1 — #2:***
● 2200 cc model
Is the resistance between 10 and 15 kΩ?
● 2500 cc model
Is the resistance between 18 and 24 kΩ?

YES : Go to next CHECK .

NO : Replace ignition coil.

CHECK : ***Terminals #3 — #4:***
● 2200 cc model
Is the resistance between 10 and 15 kΩ?
● 2500 cc model
Is the resistance between 18 and 24 kΩ?

YES : Go to step **8D4**.

NO : Replace ignition coil.

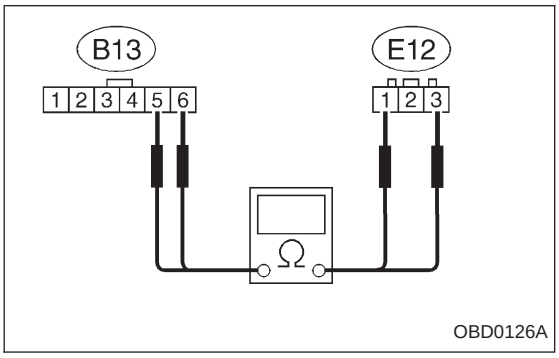

8D4	CHECK HARNESS BETWEEN IGNITOR AND IGNITION COIL CONNECTOR.

1) Turn ignition switch to OFF.
2) Disconnect connector from ignitor.
3) Measure resistance of harness connector between ignition coil and ignitor.

CHECK : ***Connector & terminal (B13) No. 5 — (E12) No. 1:***
Is the resistance less than 1 Ω?

YES : Go to next CHECK1 .

YES : Go to next CHECK2 .

CHECK1 : ***Connector & terminal (B13) No. 6 — (E12) No. 3:***
Is the resistance less than 1 Ω?

YES : Go to step **8D5**.

NO : Go to next CHECK2 .

CHECK2 : ***Is there poor contact in coupling connector (B22)?***

YES : Repair poor contact in coupling connector.

NO : Repair open circuit in harness between ignition coil and ignitor connector.

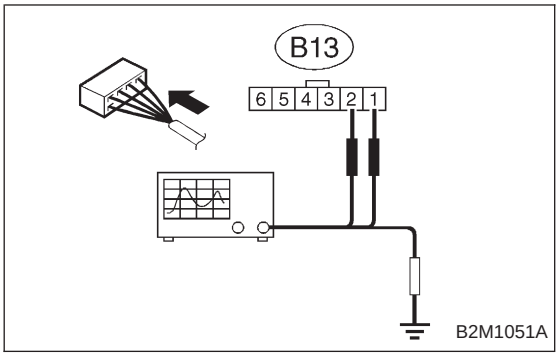

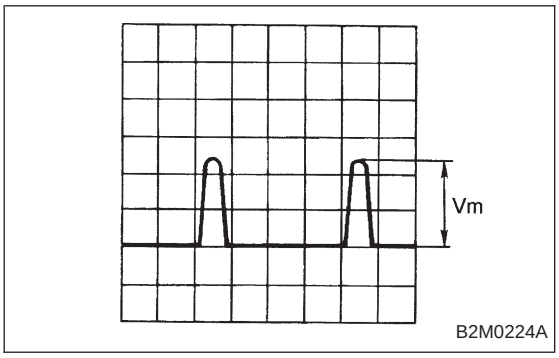

8D5	CHECK INPUT SIGNAL FOR IGNITOR.

Check if voltage varies synchronously with engine speed when cranking, while monitoring voltage between ignitor connector and engine ground.

CHECK : ***Connector & terminal:***
(B13) No. 1 (+) — Engine ground (−):
Is the voltage more than 10 V?

YES : Go to next CHECK .

NO : Replace ignitor.

CHECK : ***Connector & terminal:***
(B13) No. 2 (+) — Engine ground (−):
Is the voltage more than 10 V?

YES : Go to step **8D6**.

NO : Replace ignitor.

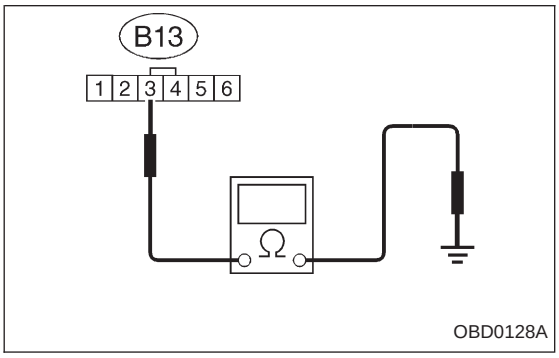

8D6	CHECK HARNESS OF IGNITOR GROUND CIRCUIT.

1) Turn ignition switch to OFF.
2) Measure resistance between ignitor and engine ground.

CHECK : ***Connector & terminal***
(B13) No. 3 — Engine ground:
Is the resistance less than 5 Ω?

YES : Go to step **8D7**.

NO : Repair open circuit in harness between ignitor connector and engine grounding terminal.

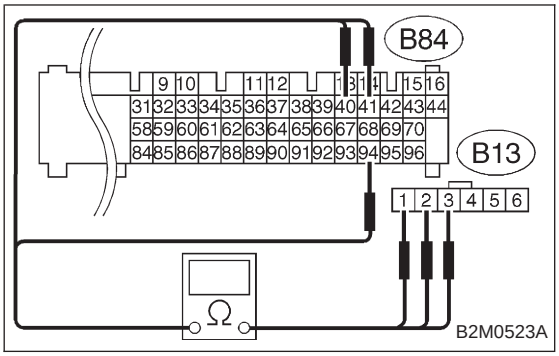

8D7	CHECK HARNESS BETWEEN ECM AND IGNITOR CONNECTOR.

1) Disconnect connector from ECM.
2) Measure resistance of harness connector between ECM and ignitor.

CHECK : ***Connector & terminal (B84) No. 41 — (B13) No. 1: Is the resistance less than 1 Ω?***

YES : Go to next CHECK .

NO : Repair open circuit in harness between ECM and ignitor connector.

CHECK : ***Connector & terminal (B84) No. 40 — (B13) No. 2: Is the resistance less than 1 Ω?***

YES : Go to next CHECK .

NO : Repair open circuit in harness between ECM and ignitor connector.

CHECK : ***Connector & terminal (B84) No. 94 — (B13) No. 3: Is the resistance less than 1 Ω?***

NO : Repair open circuit in harness between ECM and ignitor connector.

YES : Go to next step 3).

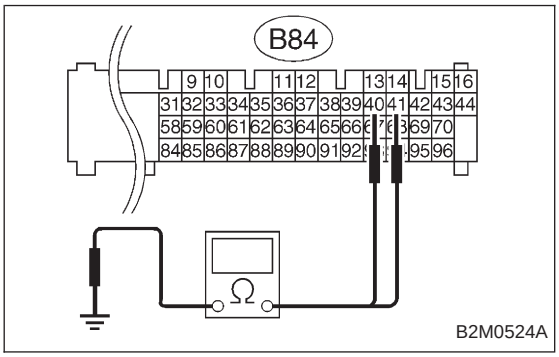

3) Measure resistance of harness connector between ECM and chassis ground.

CHECK : ***Connector & terminal (B84) No. 41 — Chassis ground: Is the resistance more than 1 MΩ?***

YES : Go to next CHECK .

NO : Repair ground short circuit in harness between ECM and ignitor connector.

CHECK : ***Connector & terminal (B84) No. 40 — Chassis ground: Is the resistance more than 1 MΩ?***

YES : Go to next CHECK .

NO : Repair ground short circuit in harness between ECM and ignitor connector.

CHECK : ***Is there poor contact in ECM connector?***

YES : Repair poor contact in ECM connector.

NO : Check fuel pump circuit. <Ref. to 2-7 [T8E0], [T8F0].>

E: FUEL PUMP CIRCUIT (2200 cc FWD, 2500 cc AWD TAIWAN SPEC. VEHICLES)

WIRING DIAGRAM:

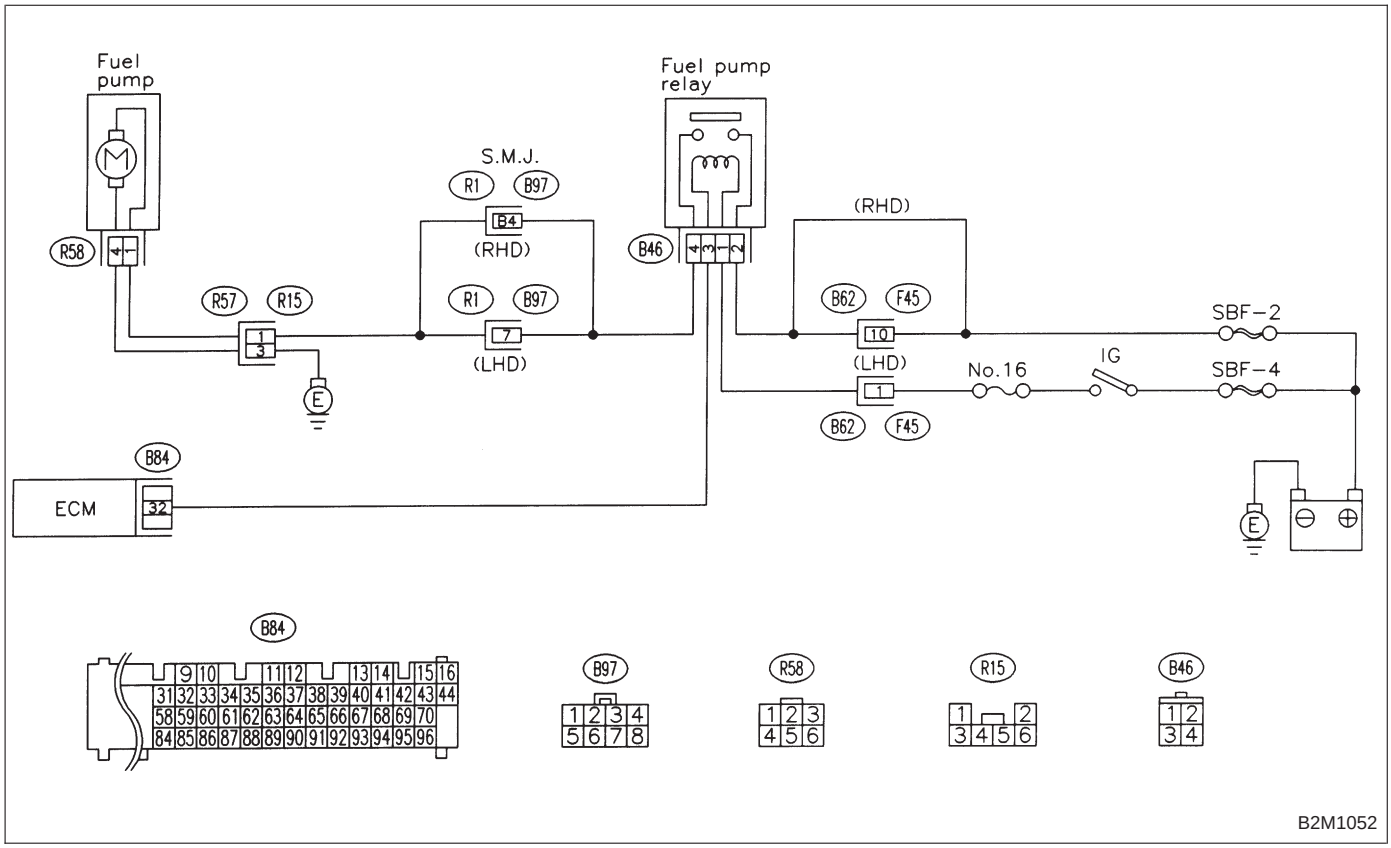

B2M1052

CAUTION:
After repair or replacement of faulty parts, conduct CLEAR MEMORY and INSPECTION MODES.
<Ref. to 2-7 [T3D0] and [T3E0].>

8E1	CHECK OPERATING SOUND OF FUEL PUMP.

Make sure that fuel pump is in operation for two seconds when turning ignition switch to ON.

CHECK : ***Does fuel pump produce operating sound?***

NOTE:
Fuel pump operation check can also be executed using Subaru Select Monitor (Function mode: FD01).
For the procedure, refer to “COMPULSORY VALVE OPERATION CHECK MODE”. <Ref. to 2-7 [T3F0].>

YES : Check fuel injector circuit. <Ref. to 2-7 [T8G0].>

NO : Go to step **8E2**.

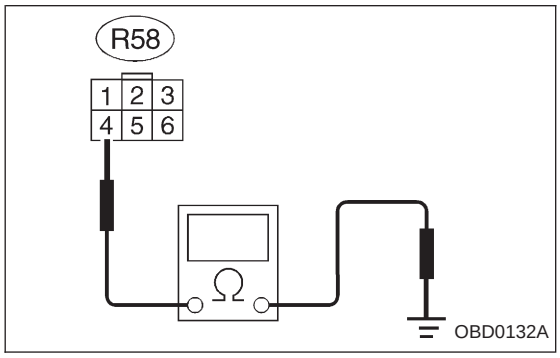

8E2	CHECK GROUND CIRCUIT OF FUEL PUMP.

1) Turn ignition switch to OFF.
2) Disconnect connector from fuel pump.
3) Measure resistance of harness connector between fuel pump and chassis ground.

CHECK : ***Connector & terminal***
(R58) No. 4 — Chassis ground:
Is the resistance less than 5 Ω?

YES : Go to step **8E3**.

NO : Repair open circuit in fuel pump ground circuit.

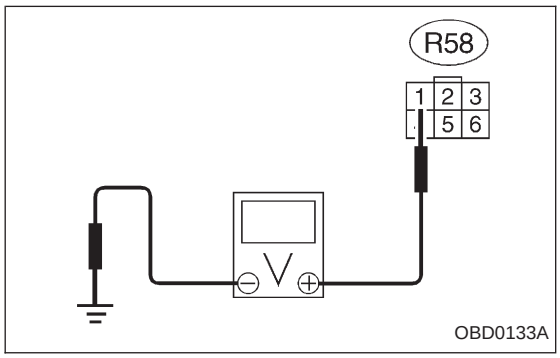

8E3	CHECK POWER SUPPLY TO FUEL PUMP.

1) Turn ignition switch to ON.
2) Measure voltage of power supply circuit between fuel pump connector and chassis ground.

CHECK : ***Connector & terminal***
(R58) No. 1 (+) — Chassis ground (−):
Is the voltage more than 10 V?

YES : Replace fuel pump.

NO : Go to step **8E4**.

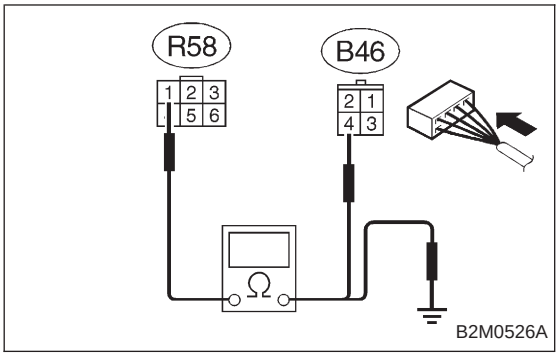

8E4	CHECK HARNESS BETWEEN FUEL PUMP AND FUEL PUMP RELAY CONNECTOR.

1) Turn ignition switch to OFF.
2) Measure resistance of harness connector between fuel pump and fuel pump relay.

CHECK : ***Connector & terminal (R58) No. 1 — (B46) No. 4: Is the resistance less than 1 Ω?***

YES : Go to next CHECK .

NO : Repair open circuit in harness between fuel pump and fuel pump relay connector.

CHECK : ***Connector & terminal (R58) No. 1 — Chassis ground: Is the resistance more than 1 MΩ?***

YES : Go to step **8E5**.

NO : Repair short circuit in harness between fuel pump and fuel pump relay connector.

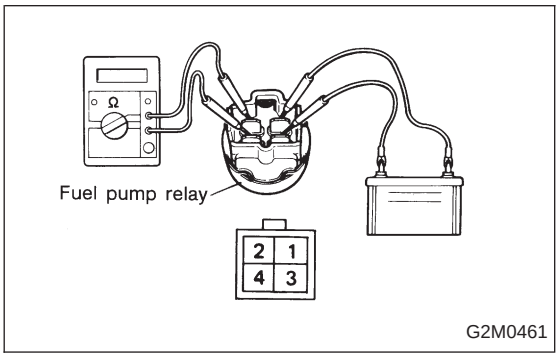

8E5	CHECK FUEL PUMP RELAY.

1) Disconnect connectors from fuel pump relay and main relay.
2) Remove fuel pump relay and main relay with bracket.
3) Connect battery to fuel pump relay connector terminals No. 1 and No. 3.
4) Measure resistance between connector terminals of fuel pump relay.

CHECK : ***Terminals No. 2 — No. 4: Is the resistance less than 10 Ω?***

YES : Go to step **8E6**.

NO : Replace fuel pump relay.

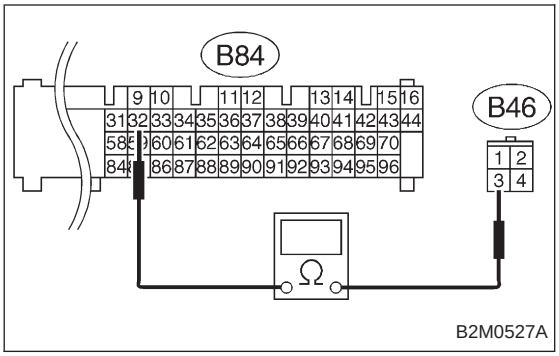

8E6	CHECK HARNESS BETWEEN ECM AND FUEL PUMP RELAY CONNECTOR.

1) Disconnect connectors from ECM.
2) Measure resistance of harness between ECM and fuel pump relay connector.

CHECK : ***Connector & terminal (B84) No. 32 — (B46) No. 3: Is the resistance less than 1 Ω?***

YES : Go to next CHECK .

NO : Repair open circuit in harness between ECM and fuel pump relay connector.

CHECK : ***Is there poor contact in ECM connector?***

YES : Repair poor contact in ECM connector.

NO : Check fuel injector circuit. <Ref. to 2-7 [T8G0].>

F: FUEL PUMP CIRCUIT (2200 cc AWD EXCEPT TAIWAN SPEC. VEHICLES)

WIRING DIAGRAM:

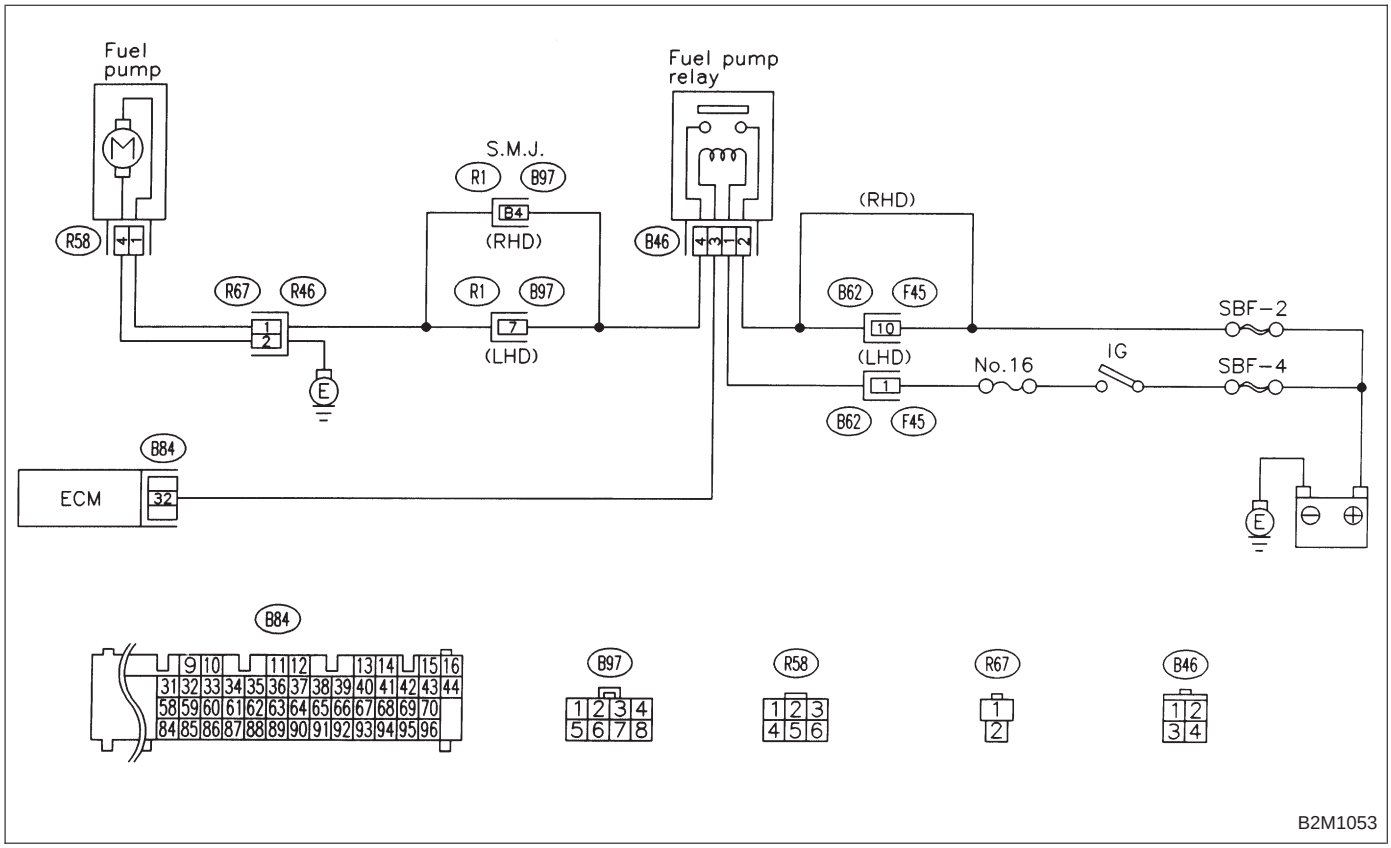

CAUTION:
After repair or replacement of faulty parts, conduct CLEAR MEMORY and INSPECTION MODES.
<Ref. to 2-7 [T3D0] and [T3E0].>

8F1	CHECK OPERATING SOUND OF FUEL PUMP.

Make sure that fuel pump is in operation for two seconds when turning ignition switch to ON.

CHECK : ***Does fuel pump produce operating sound?***

NOTE:
Fuel pump operation check can also be executed using Subaru Select Monitor (Function mode: FD01).
For the procedure, refer to “COMPULSORY VALVE OPERATION CHECK MODE”. <Ref. to 2-7 [T3F0].>

YES : Check fuel injector circuit. <Ref. to 2-7 [T8G0].>

NO : Go to step **8F2**.

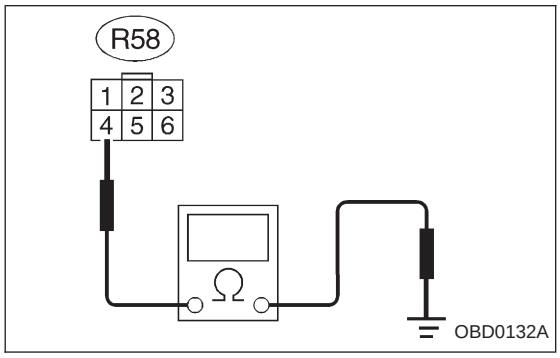

8F2	CHECK GROUND CIRCUIT OF FUEL PUMP.

1) Turn ignition switch to OFF.
2) Disconnect connector from fuel pump.
3) Measure resistance of harness connector between fuel pump and chassis ground.

CHECK : ***Connector & terminal (R58) No. 4 — Chassis ground: Is the resistance less than 5 Ω?***

YES : Go to step **8F3**.

NO : Repair open circuit in fuel pump ground circuit.

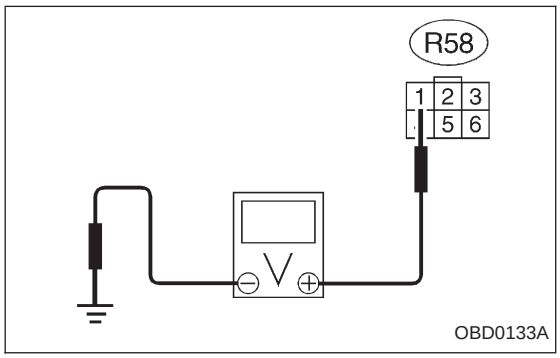

8F3	CHECK POWER SUPPLY TO FUEL PUMP.

1) Turn ignition switch to ON.
2) Measure voltage of power supply circuit between fuel pump connector and chassis ground.

CHECK : ***Connector & terminal (R58) No. 1 (+) — Chassis ground (−): Is the voltage more than 10 V?***

YES : Replace fuel pump.

NO : Go to step **8F4**.

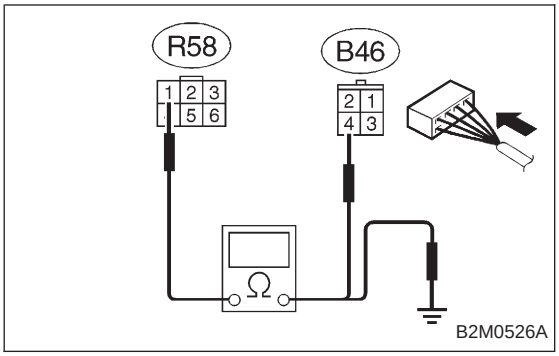

8F4	CHECK HARNESS BETWEEN FUEL PUMP AND FUEL PUMP RELAY CONNECTOR.

1) Turn ignition switch to OFF.
2) Measure resistance of harness connector between fuel pump and fuel pump relay.

CHECK : ***Connector & terminal (R58) No. 1 — (B46) No. 4: Is the resistance less than 1 Ω?***

YES : Go to next CHECK .

NO : Repair open circuit in harness between fuel pump and fuel pump relay connector.

CHECK : ***Connector & terminal (R58) No. 1 — Chassis ground: Is the resistance more than 1 MΩ?***

YES : Go to step **8F5**.

NO : Repair short circuit in harness between fuel pump and fuel pump relay connector.

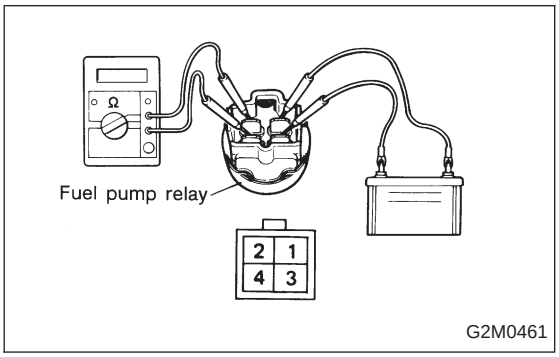

8F5	CHECK FUEL PUMP RELAY.

1) Disconnect connectors from fuel pump relay and main relay.
2) Remove fuel pump relay and main relay with bracket.
3) Connect battery to fuel pump relay connector terminals No. 1 and No. 3.
4) Measure resistance between connector terminals of fuel pump relay.

CHECK : ***Terminals No. 2 — No. 4: Is the resistance less than 10 Ω?***

YES : Go to step **8F6**.

NO : Replace fuel pump relay.

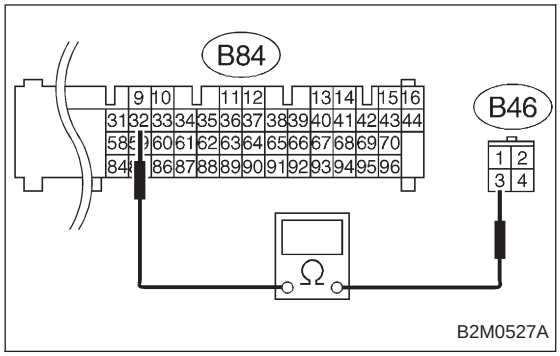

8F6	CHECK HARNESS BETWEEN ECM AND FUEL PUMP RELAY CONNECTOR.

1) Disconnect connectors from ECM.
2) Measure resistance of harness between ECM and fuel pump relay connector.

CHECK : ***Connector & terminal (B84) No. 32 — (B46) No. 3: Is the resistance less than 1 Ω?***

YES : Go to next CHECK .

NO : Repair open circuit in harness between ECM and fuel pump relay connector.

CHECK : ***Is there poor contact in ECM connector?***

YES : Repair poor contact in ECM connector.

NO : Check fuel injector circuit. <Ref. to 2-7 [T8G0].>

G: FUEL INJECTOR CIRCUIT

WIRING DIAGRAM:

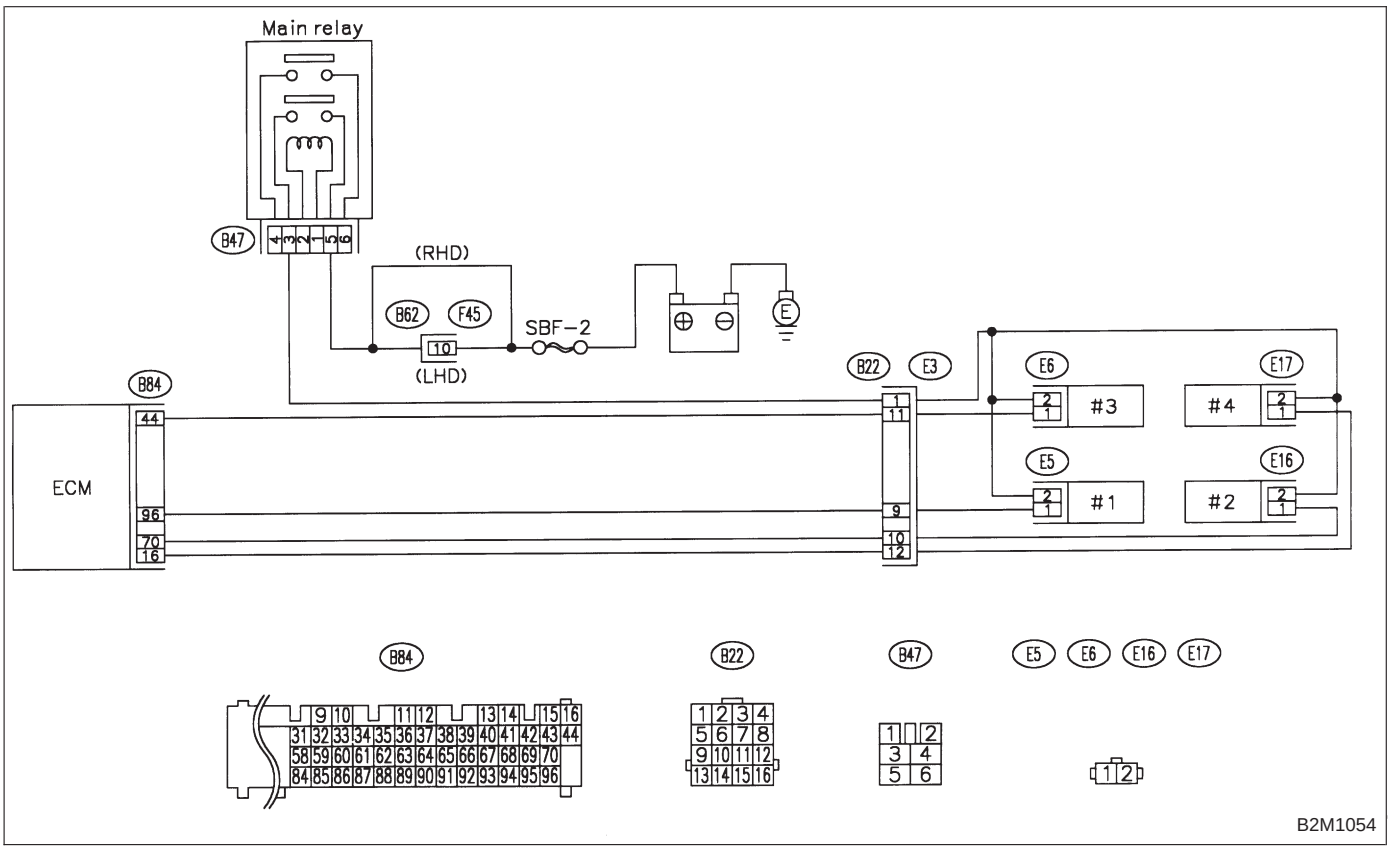

CAUTION:

- **Check or repair only faulty parts.**
- **After repair or replacement of faulty parts, conduct CLEAR MEMORY and INSPECTION MODES.**

<Ref. to 2-7 [T3D0] and [T3E0].>

NOTE:
Check fuel injector circuit. <Ref. to 2-7 [T10AA0] or [T10AE0], [T11AA0] or [T11AE0].>

H: CRANKSHAFT POSITION SENSOR CIRCUIT

WIRING DIAGRAM:

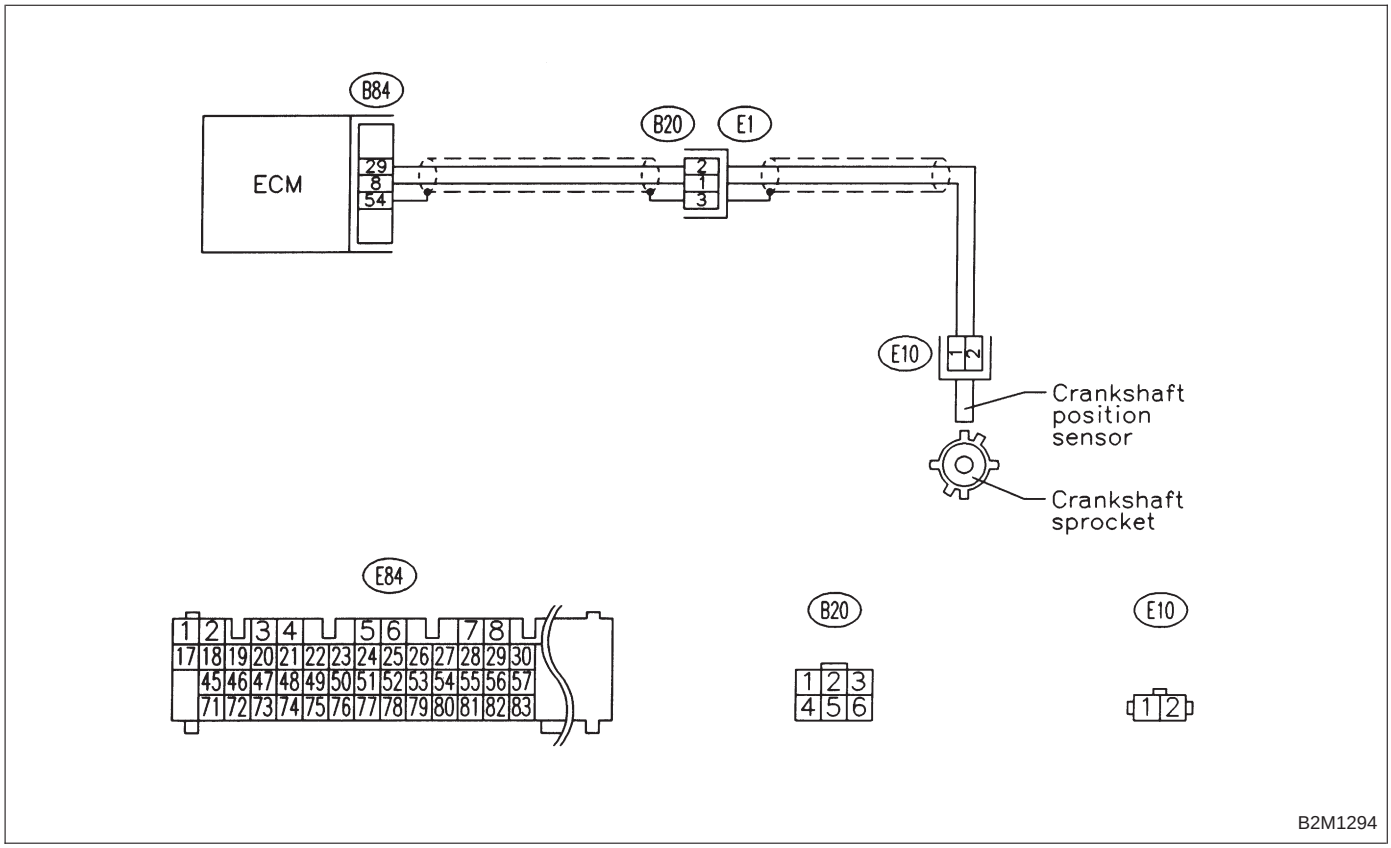

CAUTION:
After repair or replacement of faulty parts, conduct CLEAR MEMORY and INSPECTION MODES.
<Ref. to 2-7 [T3D0] and [T3E0].>

NOTE:
Check crankshaft position sensor circuit. <Ref. to 2-7 [T10AK0], [T11AK0].>

I: CAMSHAFT POSITION SENSOR CIRCUIT

WIRING DIAGRAM:

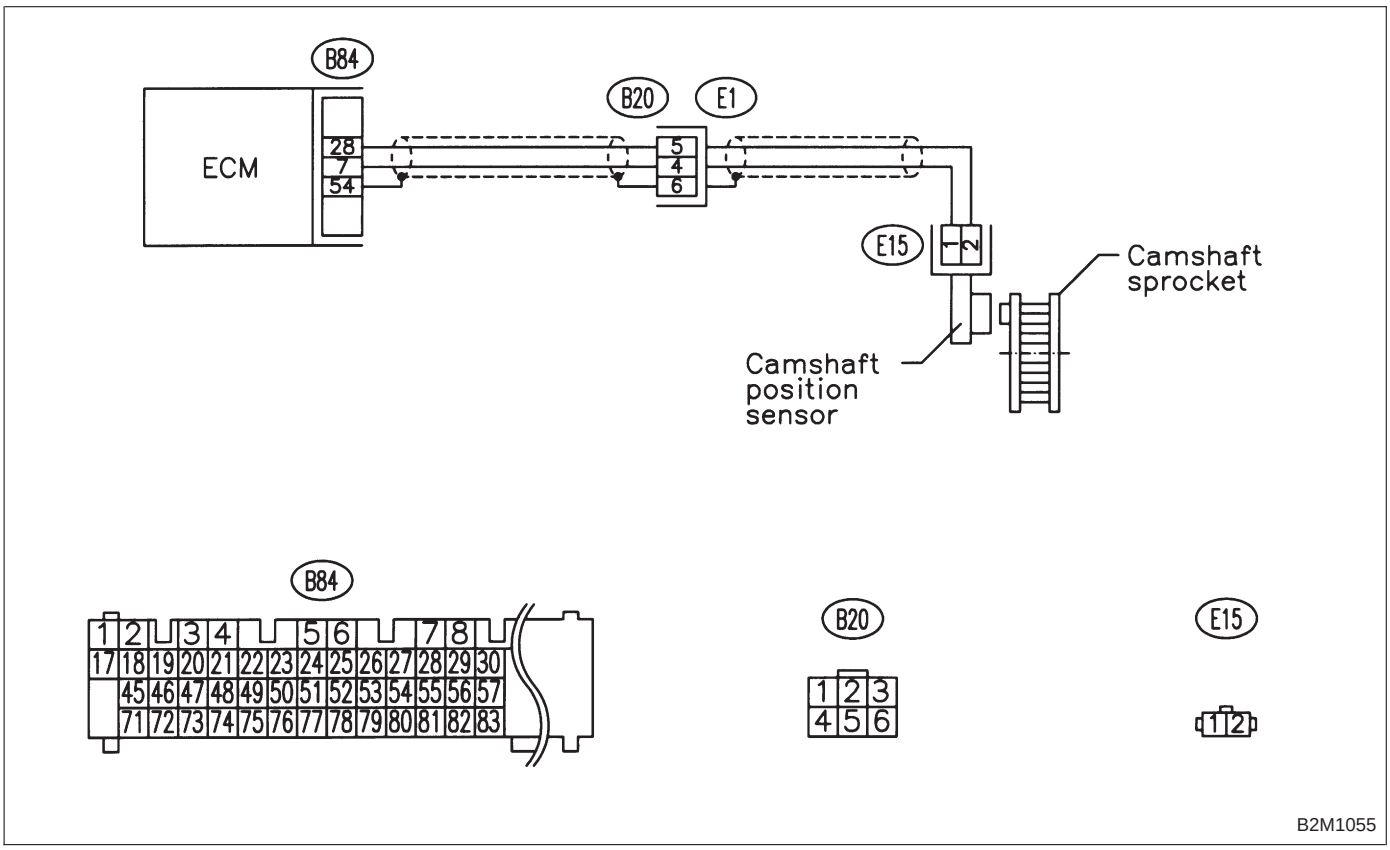

CAUTION:
After repair or replacement of faulty parts, conduct CLEAR MEMORY and INSPECTION MODES.
<Ref. to 2-7 [T3D0] and [T3E0].>

NOTE:
Check camshaft position sensor circuit. <Ref. to 2-7 [T10AM0], [T11AM0].>