2. Electrical Components Location

A: ENGINE

1. MODULE

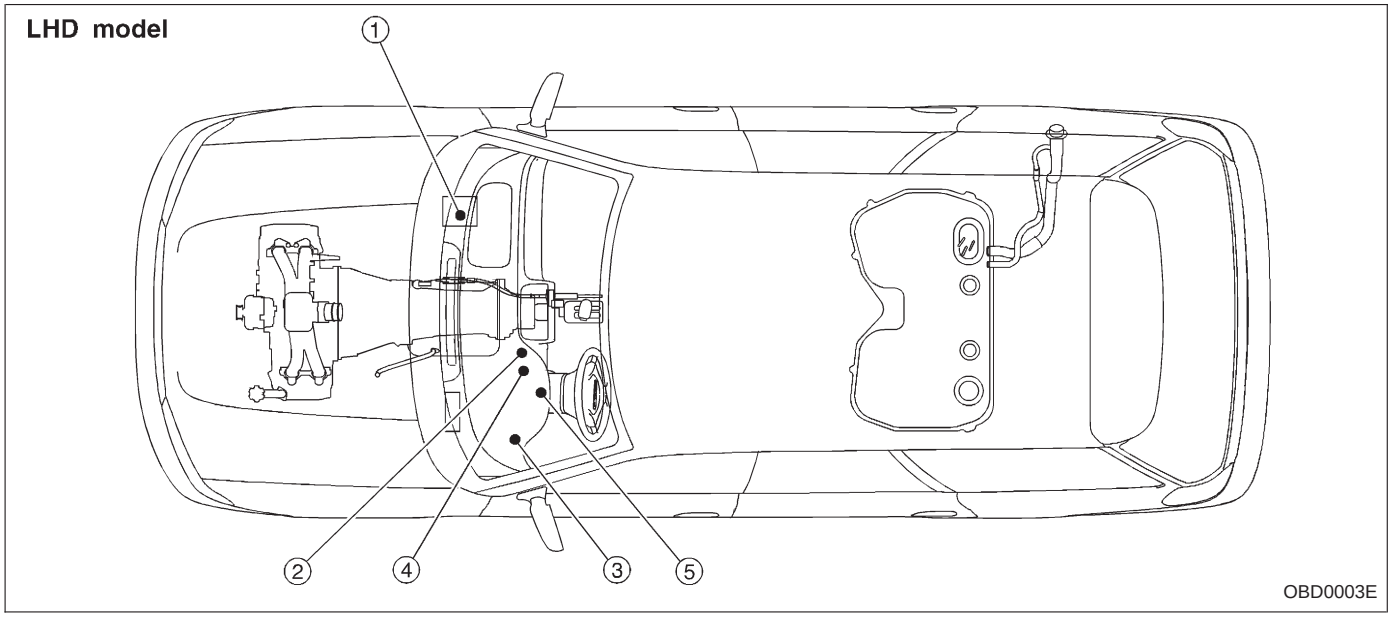

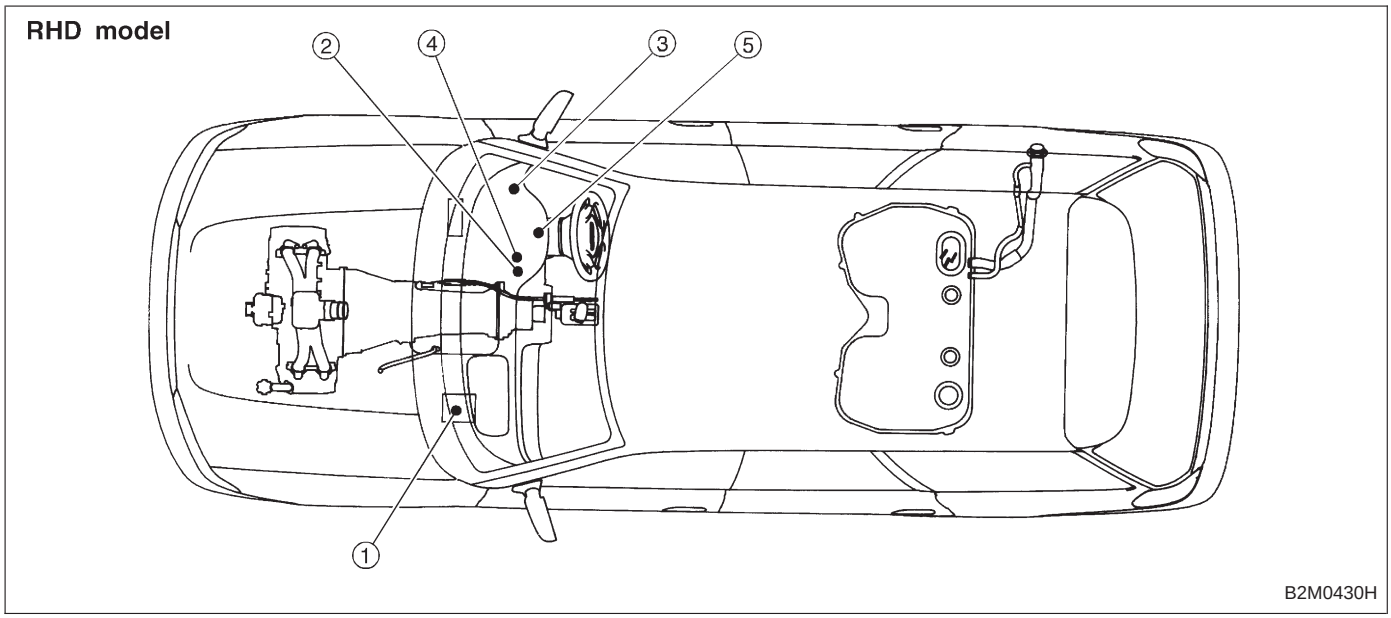

① Engine control module (ECM)
② Data link connector (for Subaru select monitor only)
③ Data link connector (for Subaru select monitor and OBD-II general scan tool)
④ Test mode connector
⑤ CHECK ENGINE malfunction indicator lamp (MIL)

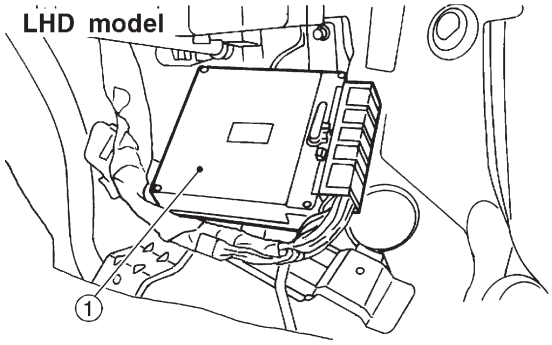

OBD0004B

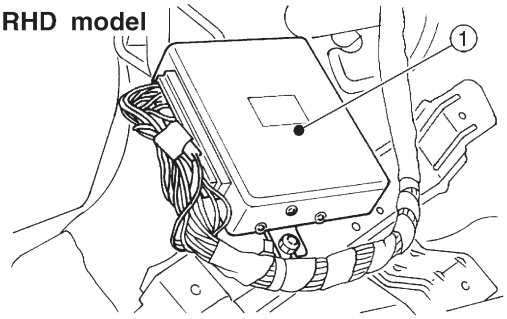

B2M0431B

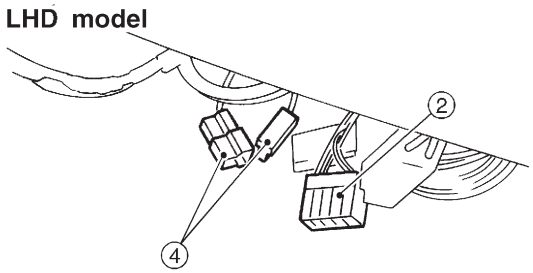

OBD0005G

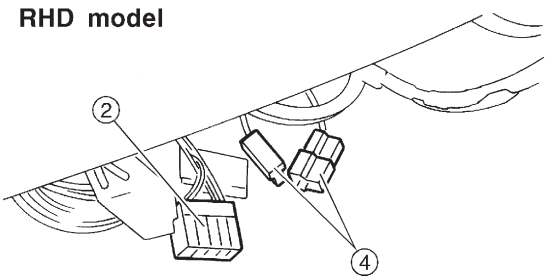

B2M0432C

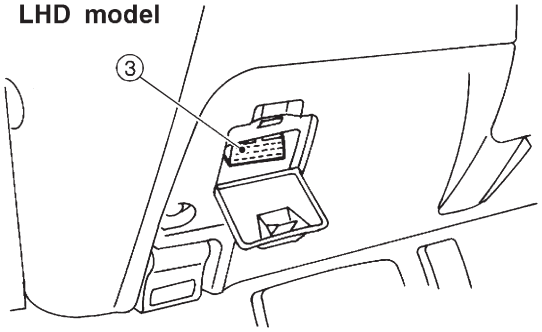

OBD0006E

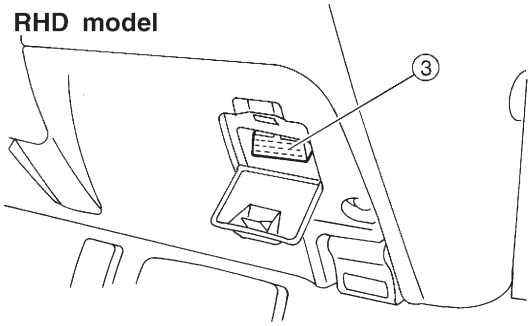

B2M0433C

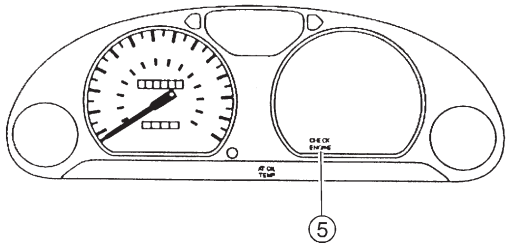

B2M0470A

2. SENSOR

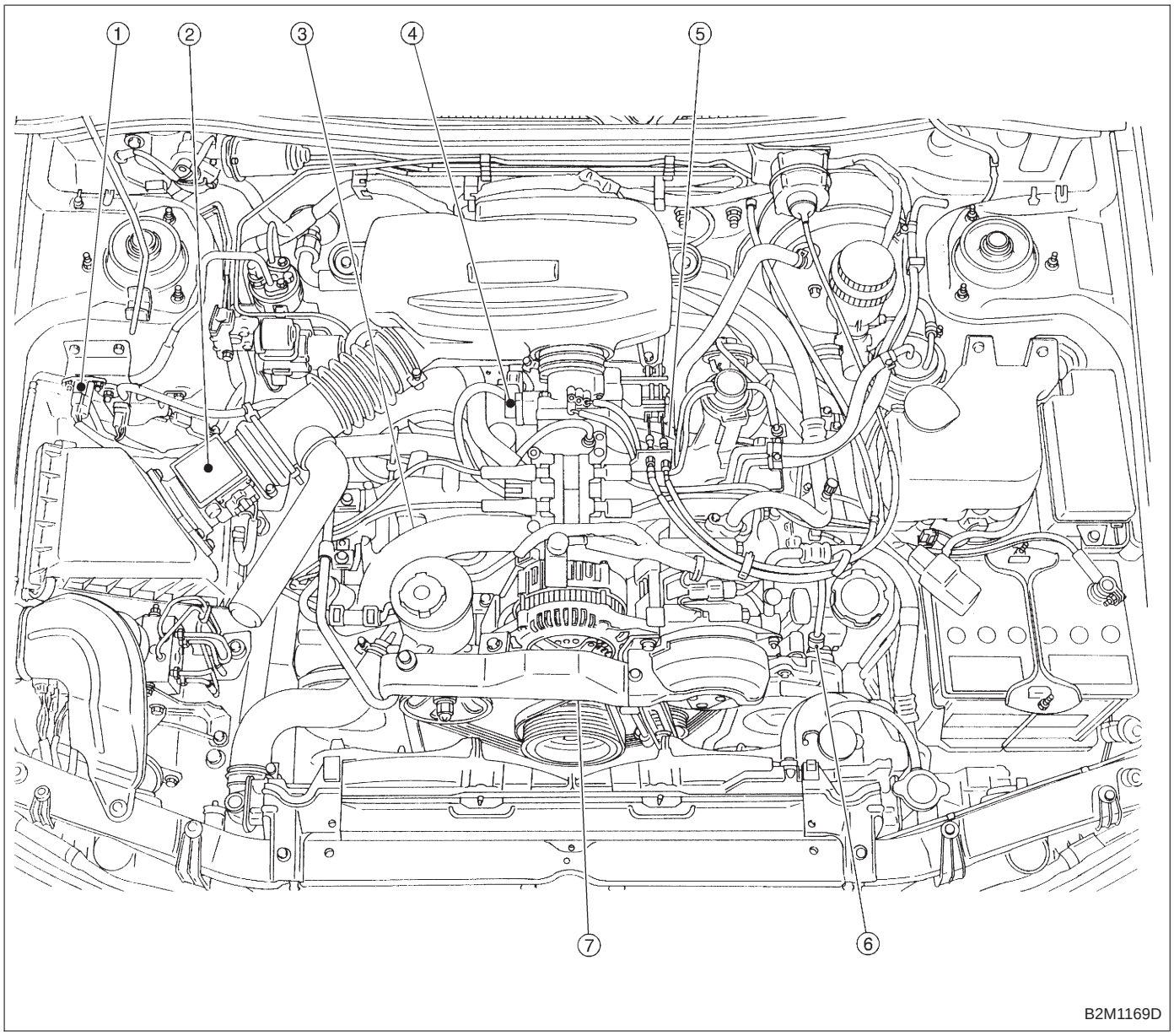

1. Pressure sensor
2. Mass air flow sensor
3. Engine coolant temperature sensor
4. Throttle position sensor
5. Knock sensor
6. Camshaft position sensor
7. Crankshaft position sensor

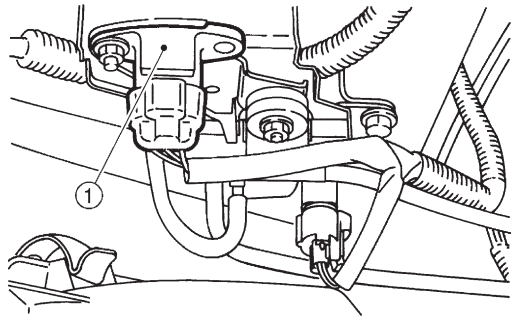

B2M0776A

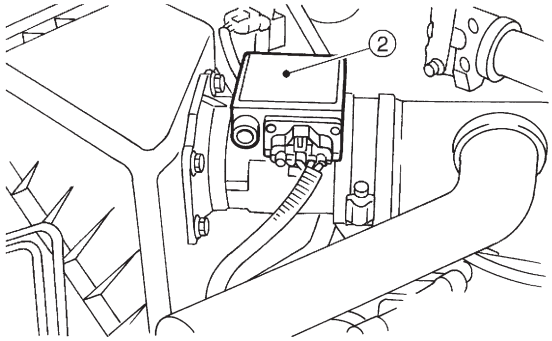

B2M1034A

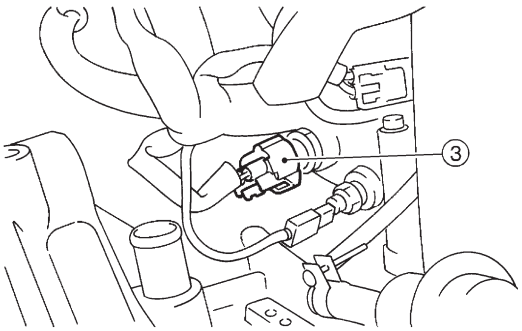

B2M1690A

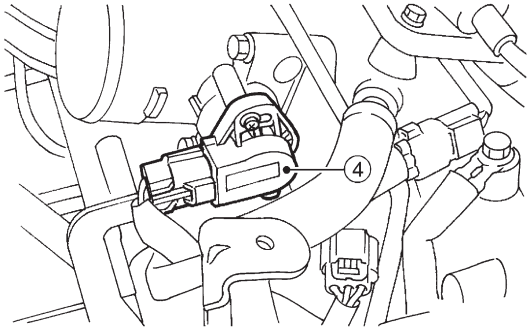

B2M1035A

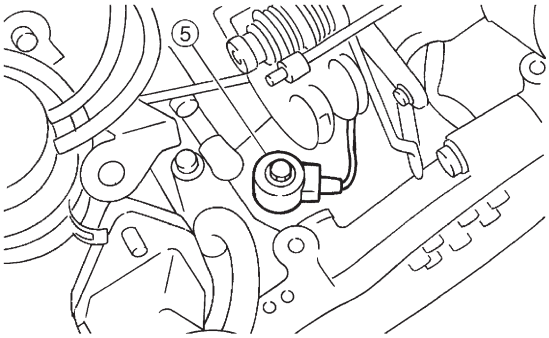

B2M1691A

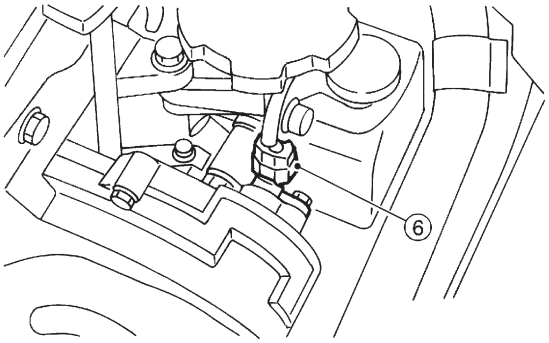

OBD0015A

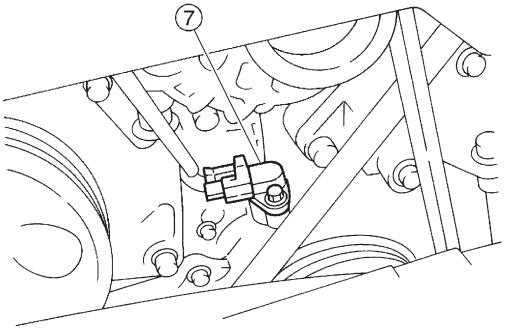

B2M0213B

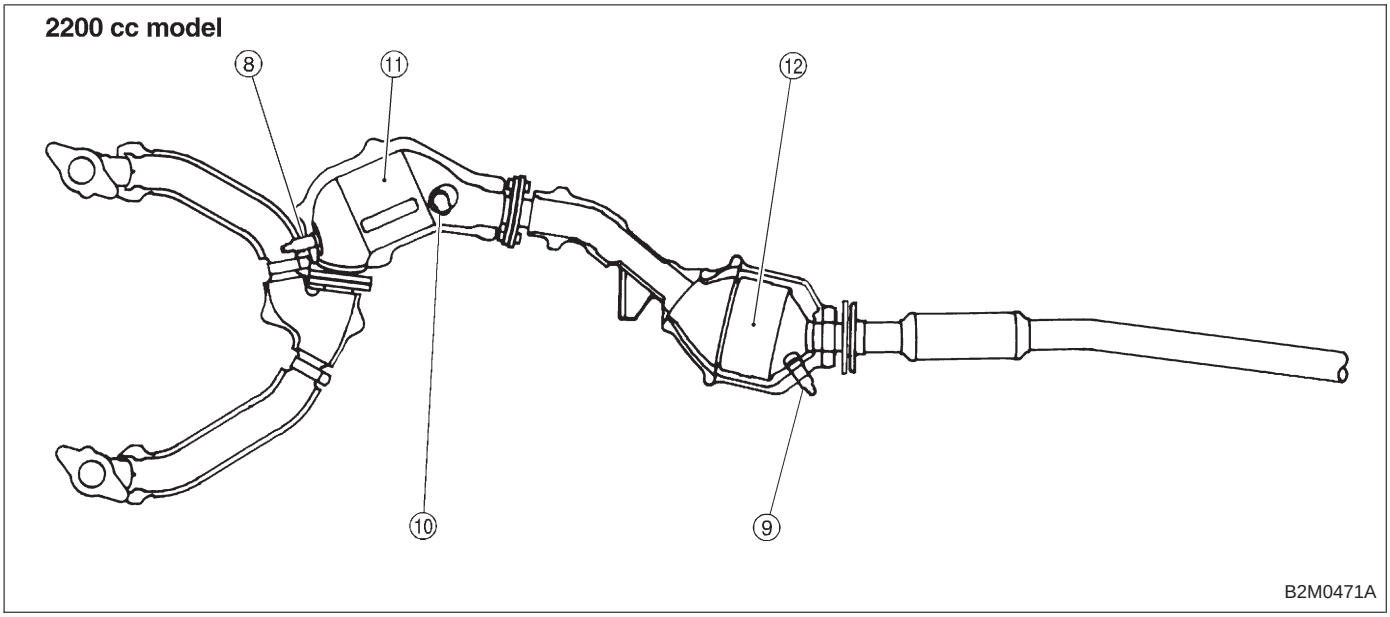

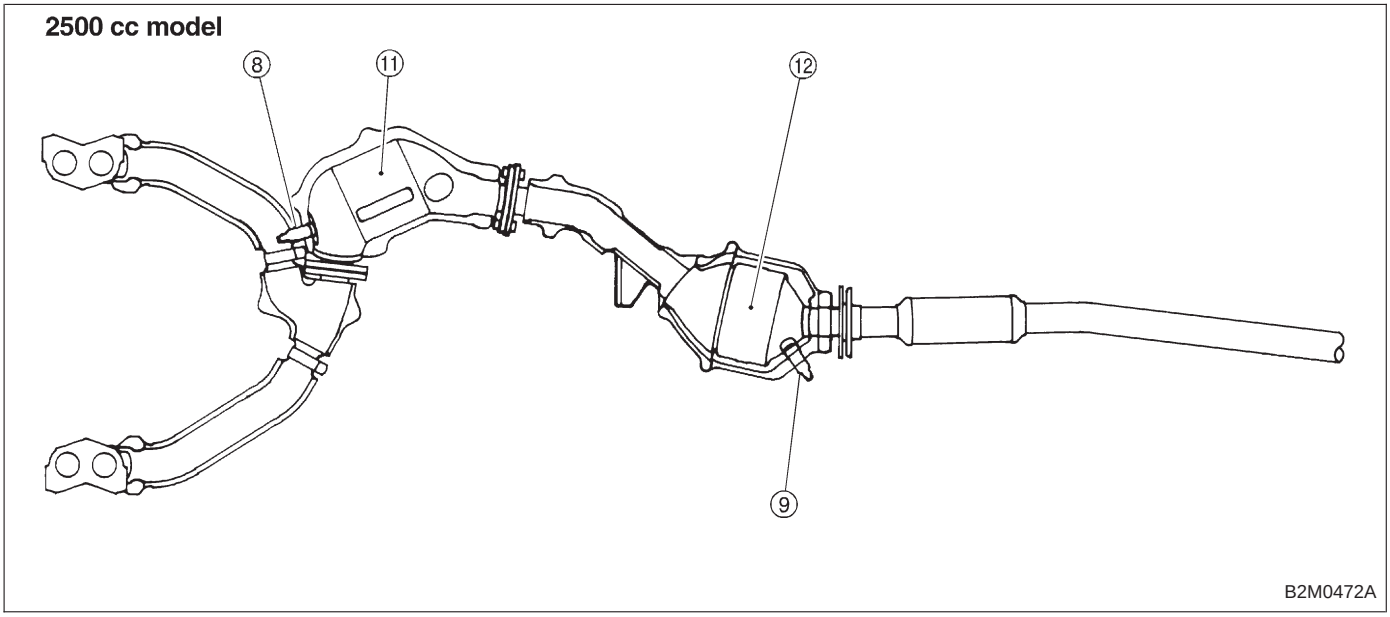

⑧ Front oxygen sensor
⑨ Rear oxygen sensor (Except 2200 cc California spec. vehicles)
⑩ Rear oxygen sensor (2200 cc California spec. vehicles)
⑪ Front catalytic converter
⑫ Rear catalytic converter

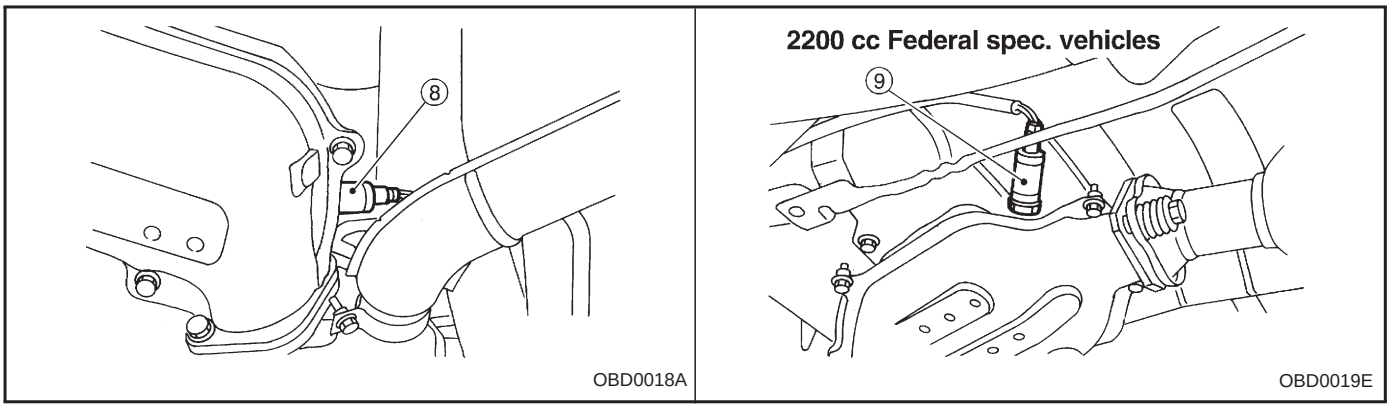

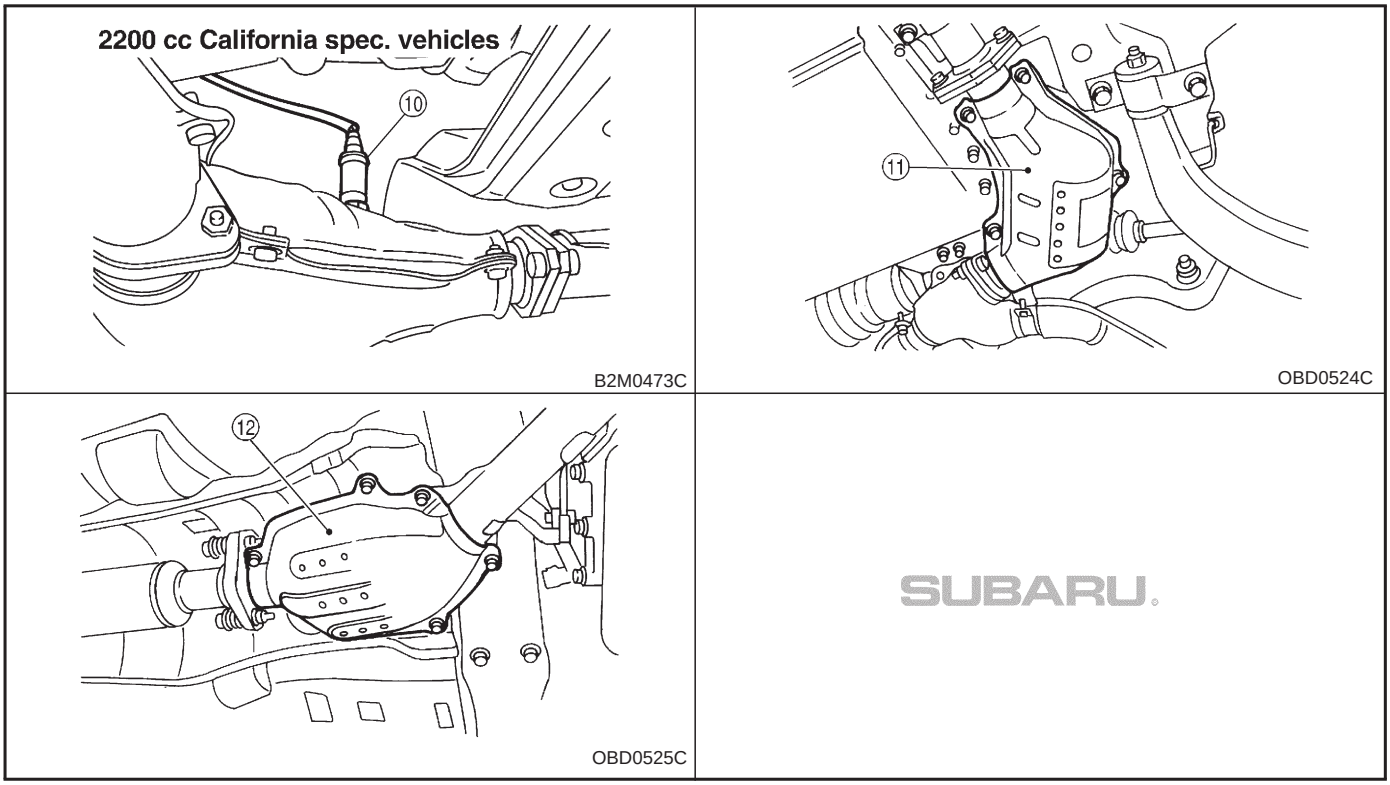
2200 cc California spec. vehicles
10
B2M0473C
11
OBD0524C
12
OBD0525C
SUBARU

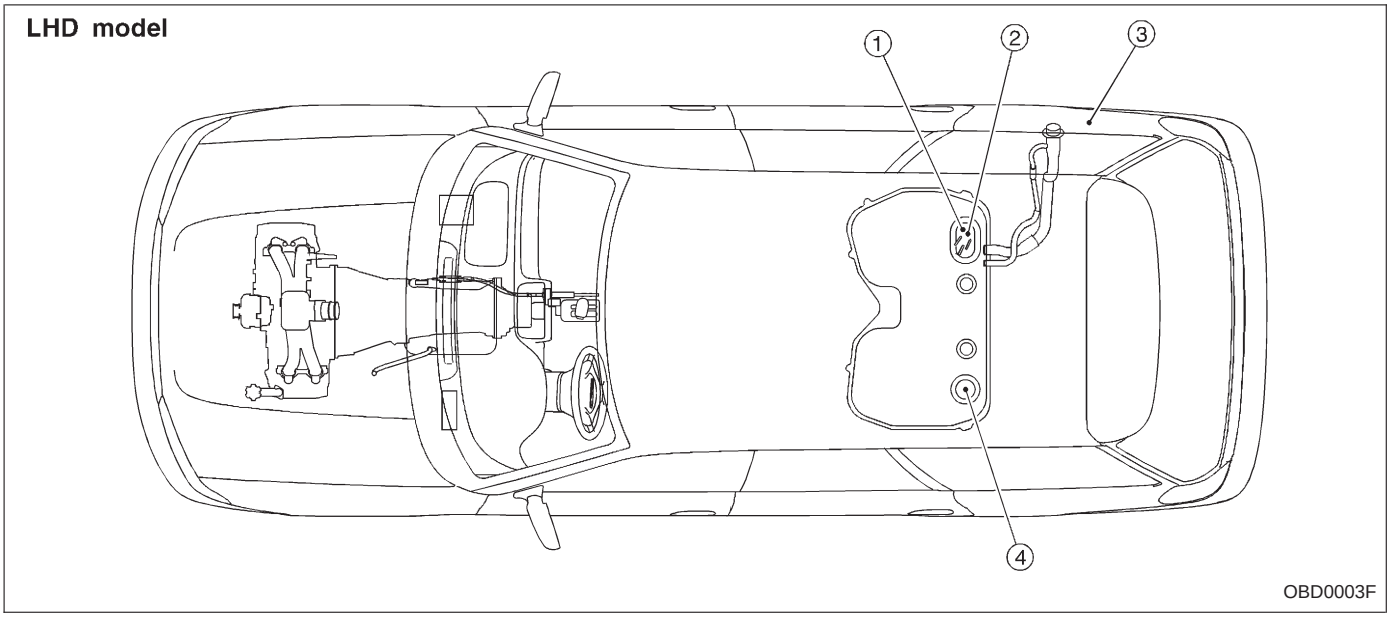

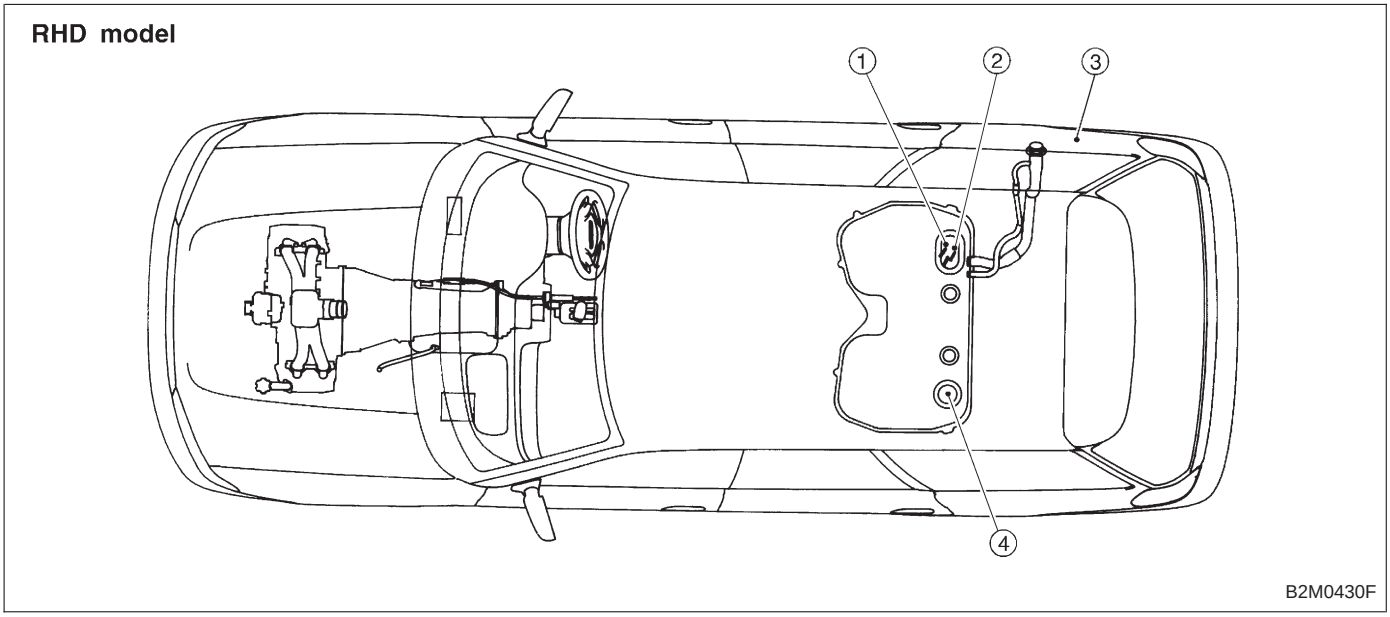

① Fuel level sensor
② Fuel temperature sensor (2200 cc AWD except Taiwan spec. vehicles)
③ Fuel tank pressure sensor (2200 cc AWD except Taiwan spec. vehicles)
④ Fuel sub level sensor

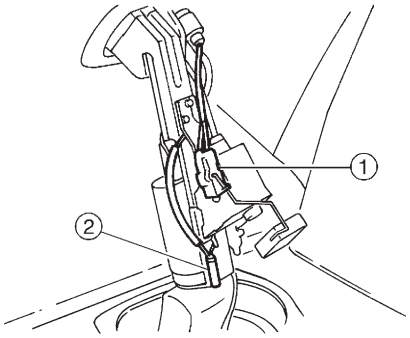

B2M0921A

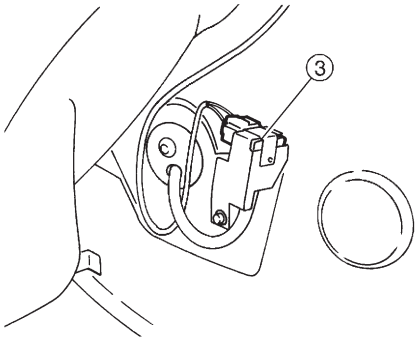

B2M0922A

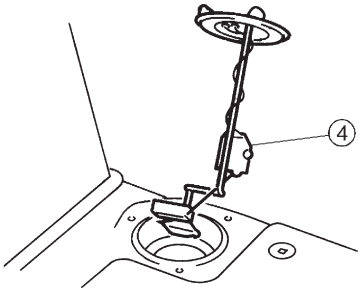

B2M0946A

3. SOLENOID VALVE, EMISSION CONTROL SYSTEM PARTS AND IGNITION SYSTEM PARTS

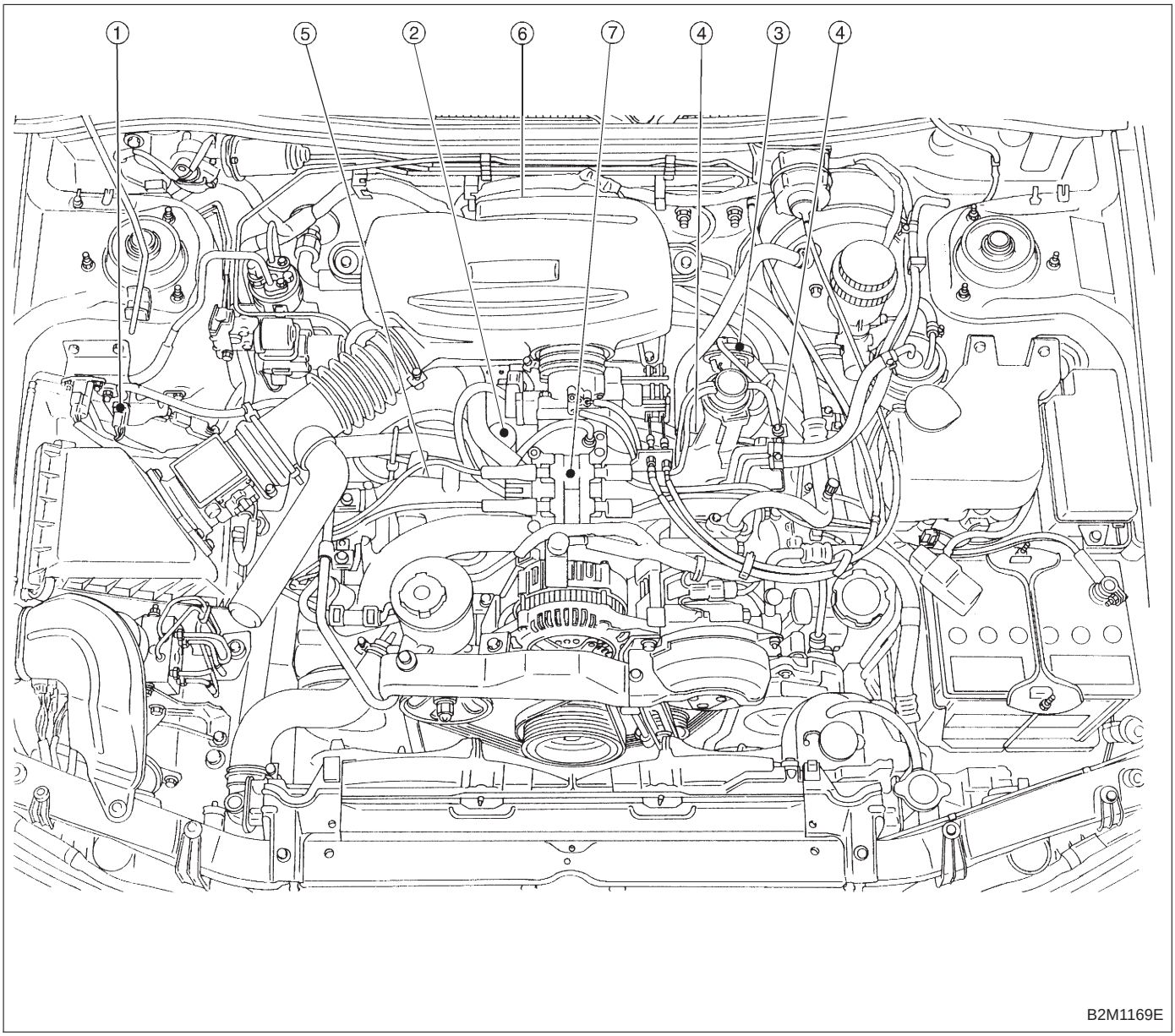

① Pressure sources switching solenoid valve
② Idle air control solenoid valve
③ EGR valve (Except 2200 cc MT vehicles)
④ EGR control solenoid valve (Except 2200 cc MT vehicles)
⑤ Purge control solenoid valve
⑥ Ignitor
⑦ Ignition coil

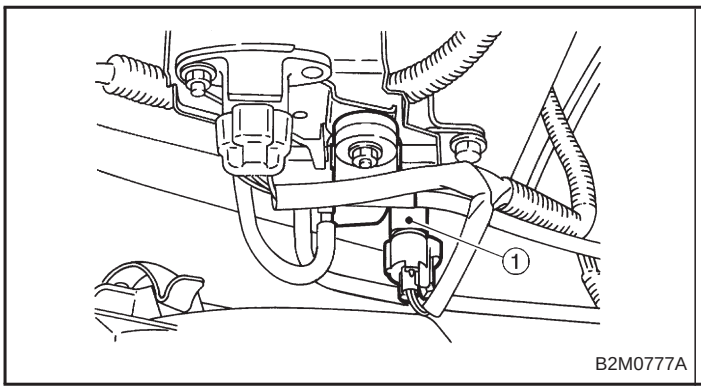

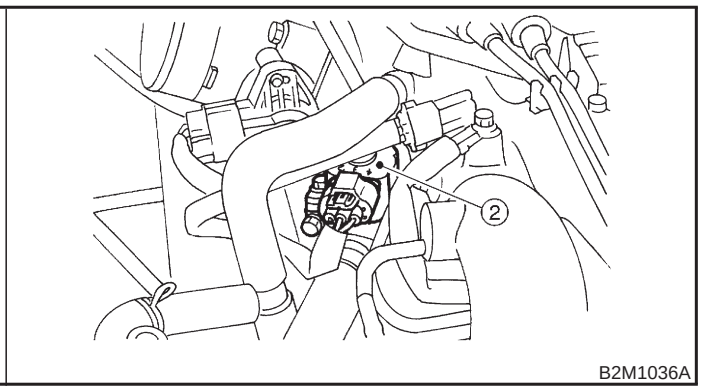

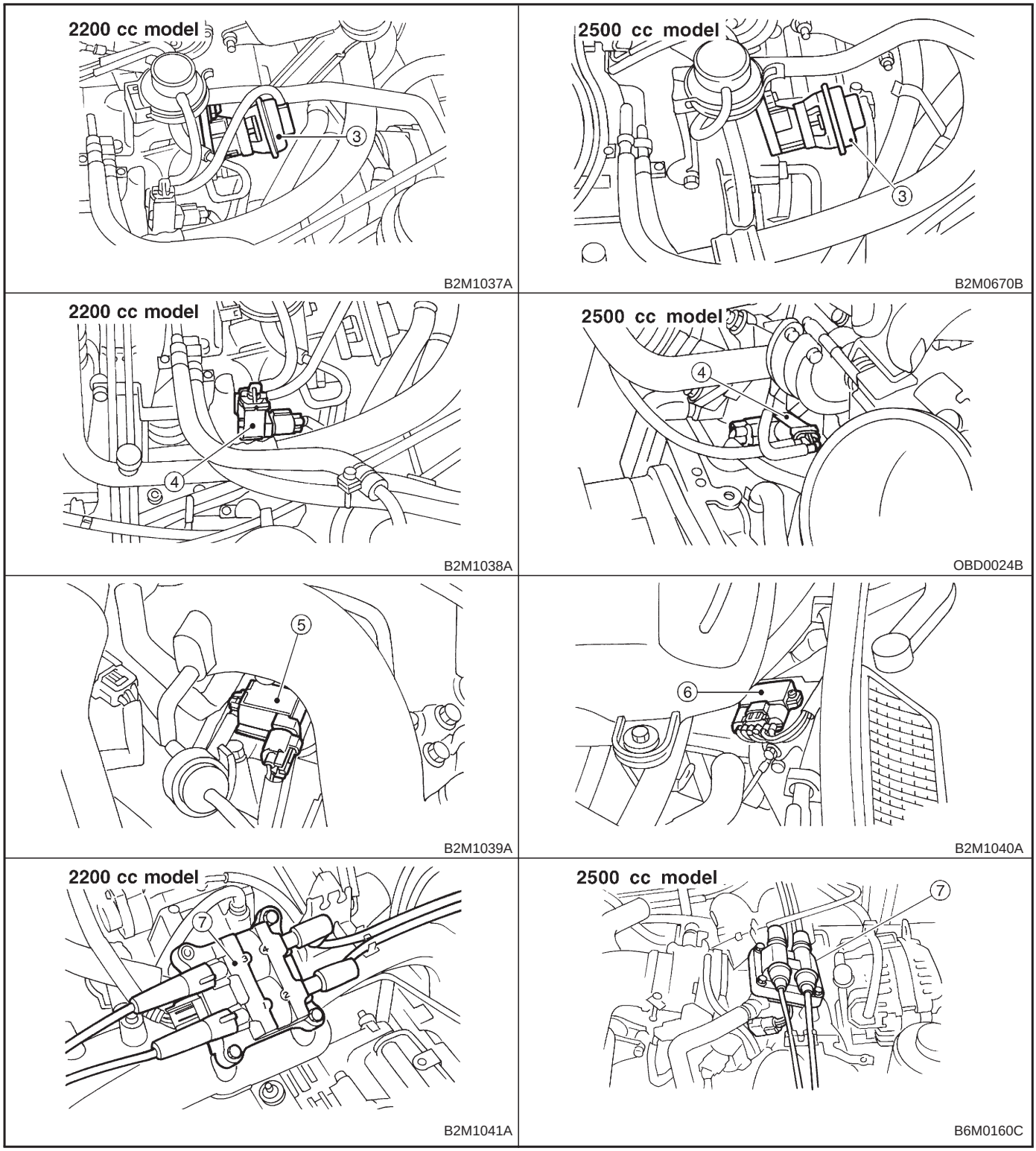
2200 cc model
3
B2M1037A
2500 cc model
3
B2M0670B
2200 cc model
4
B2M1038A
2500 cc model
4
OBD0024B
5
B2M1039A
6
B2M1040A
2200 cc model
7
B2M1041A
2500 cc model
7
B6M0160C

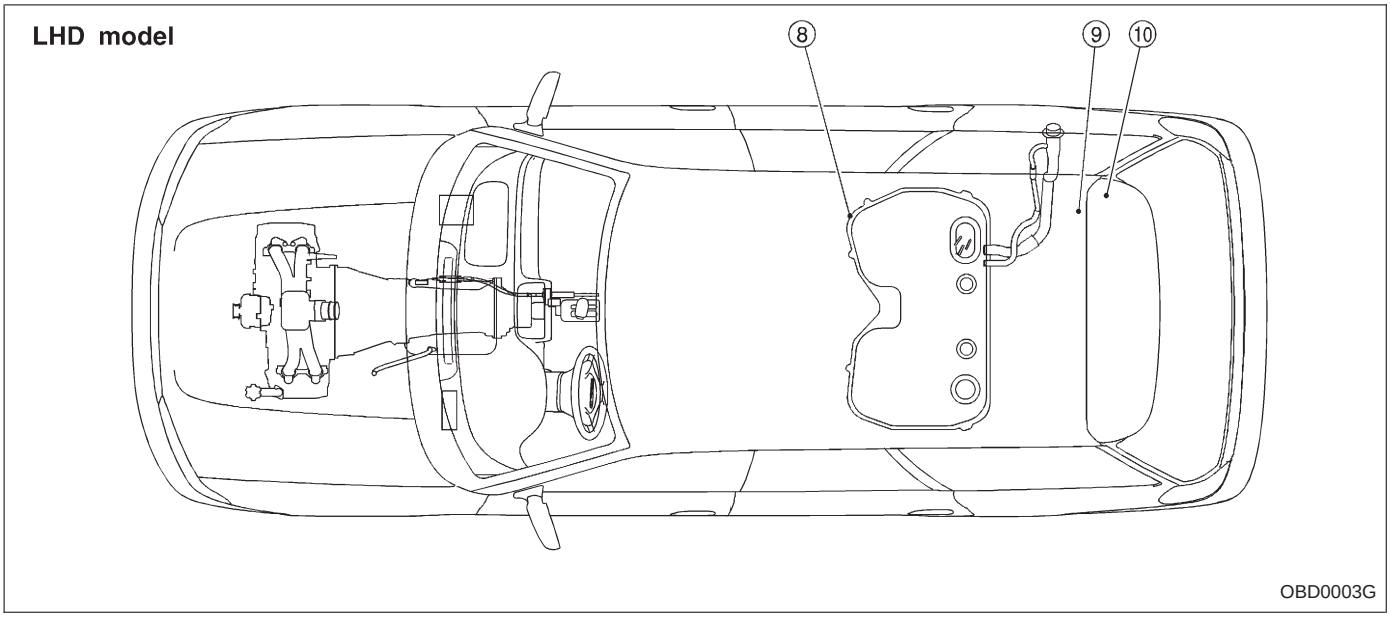

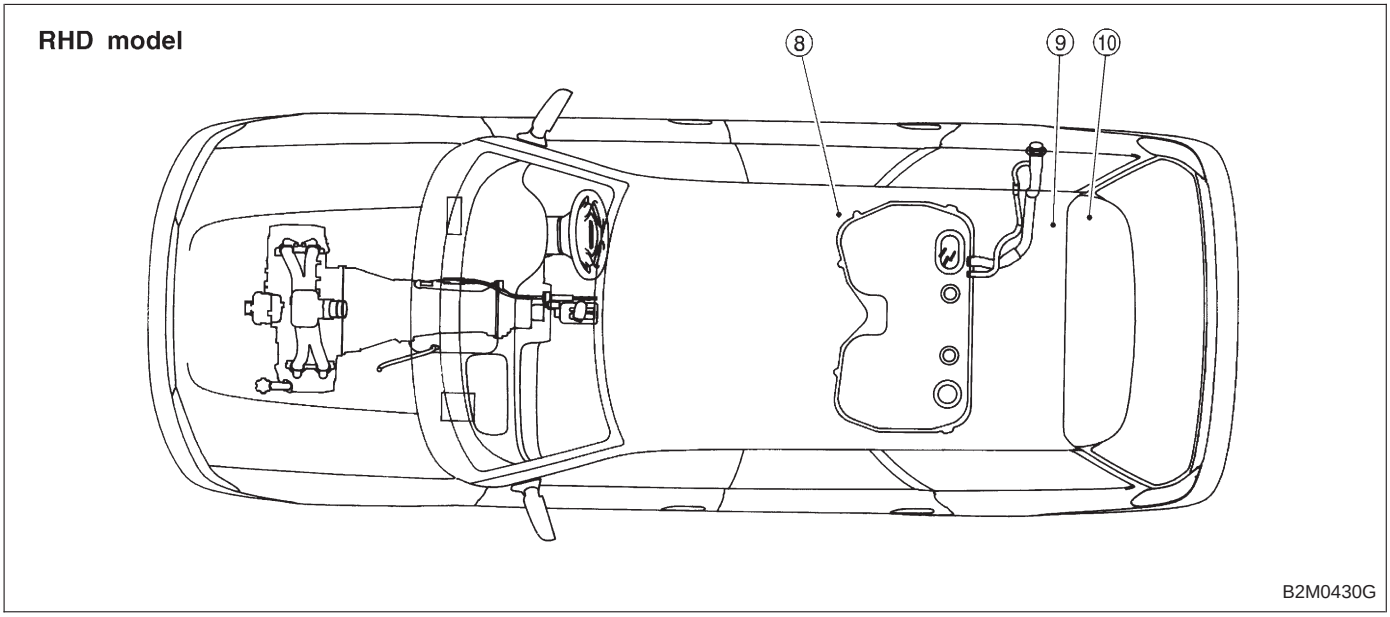

⑧ Pressure control solenoid valve (2200 cc AWD except Taiwan spec. vehicles)

⑨ Vent control solenoid valve (2200 cc except AWD Taiwan spec. vehicles)

⑩ Canister (2200 cc AWD except Taiwan spec. vehicles)

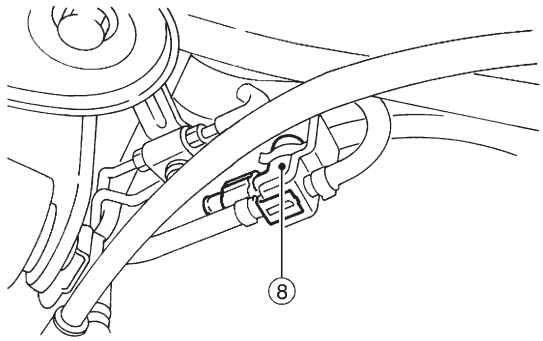

B2M0923A

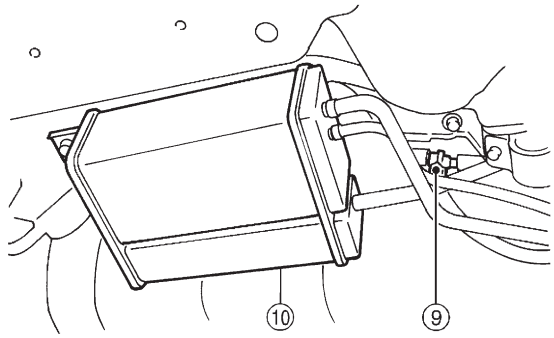

B2M0924A

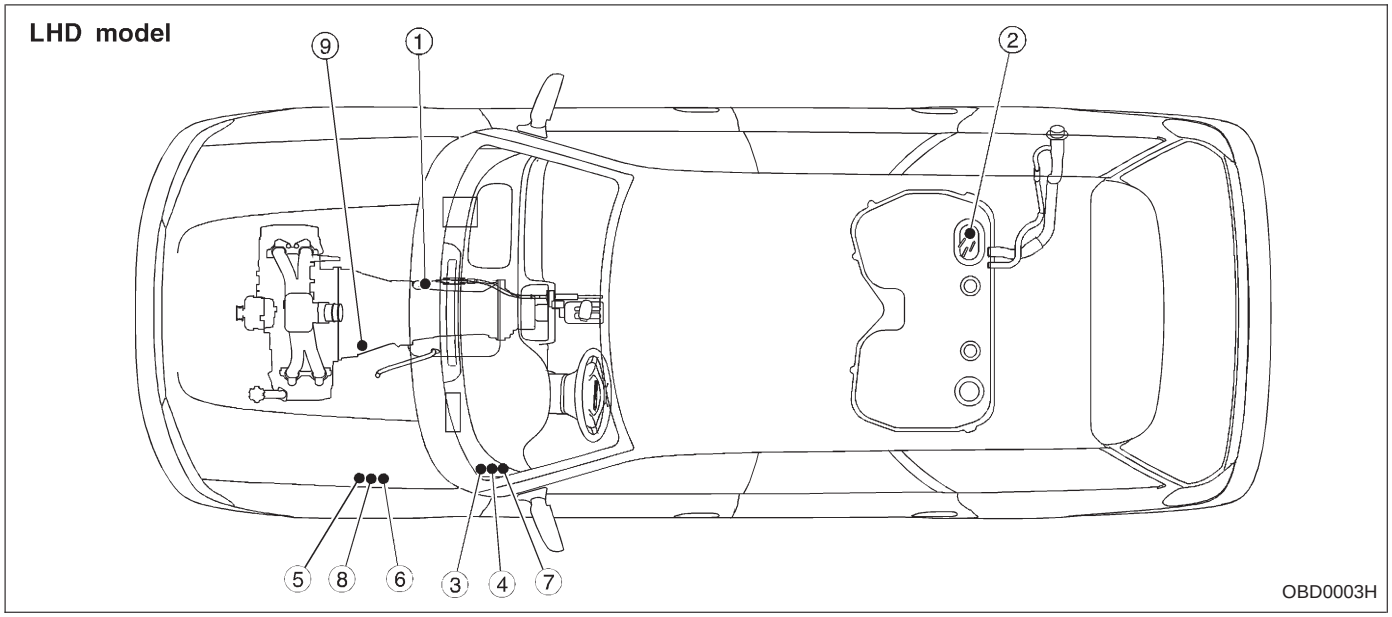

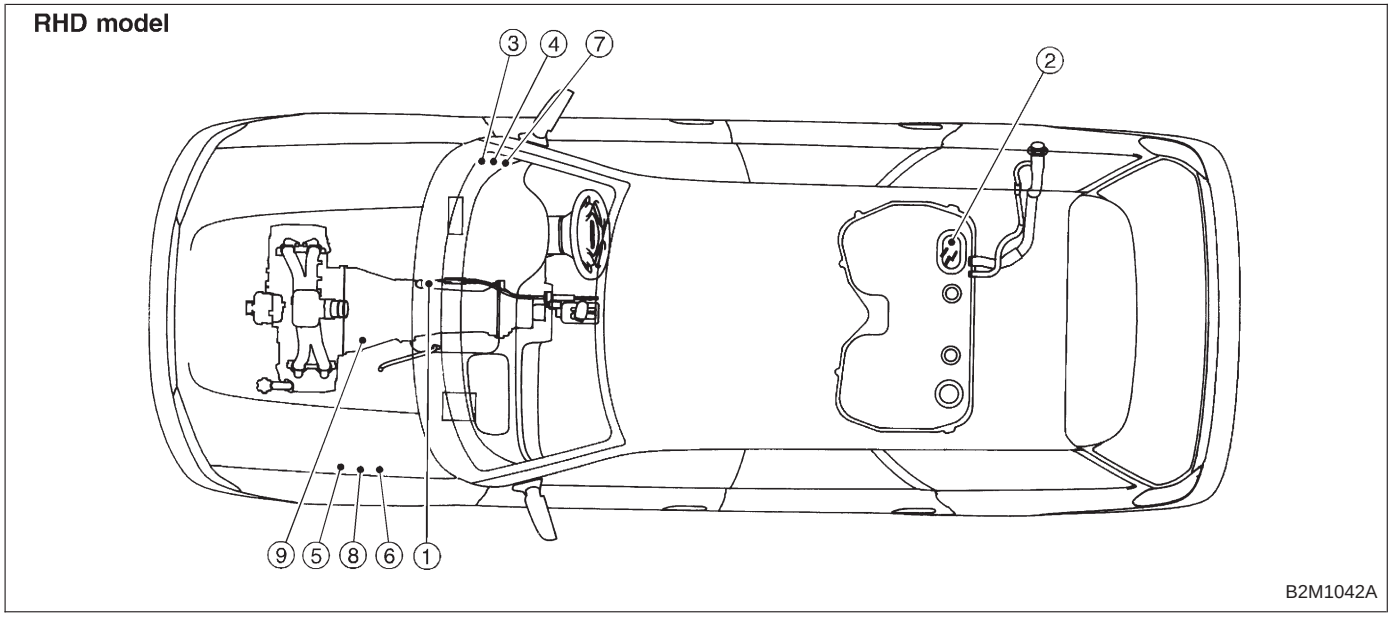

① Inhibitor switch (AT vehicles only)
② Fuel pump
③ Main relay
④ Fuel pump relay
⑤ Radiator main fan relay 1 (With A/C models only)
⑥ Radiator main fan relay 2 (With A/C models only)
⑦ Radiator sub fan relay 1 (With A/C models)
Main fan relay (Without A/C models)
⑧ Radiator sub fan relay 2 (With A/C models only)
⑨ Starter

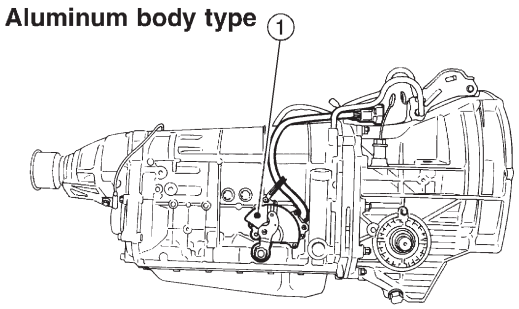

OBD0047C

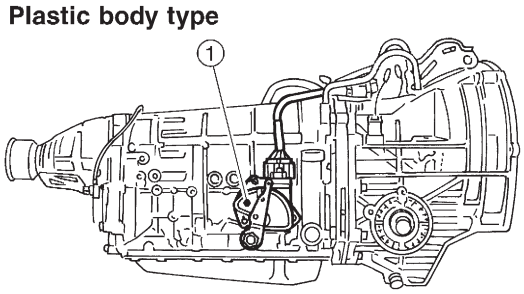

B2M1043E

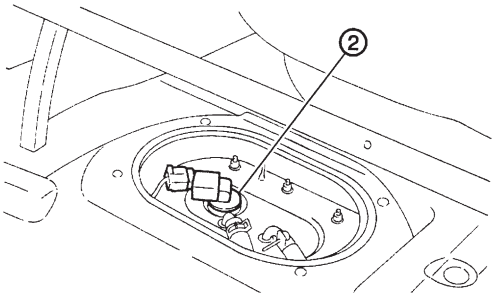

B2M0216A

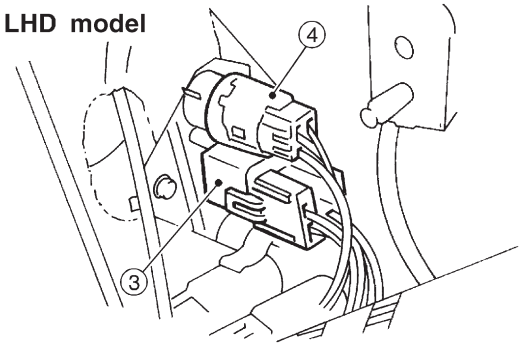

B2M0218C

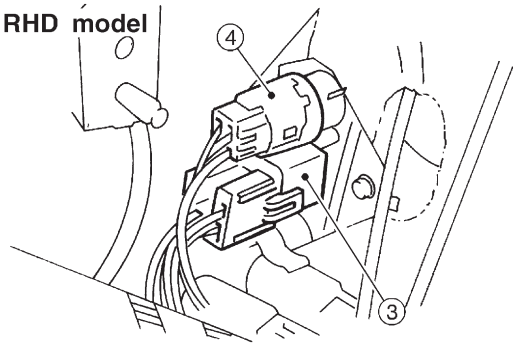

B2M0434B

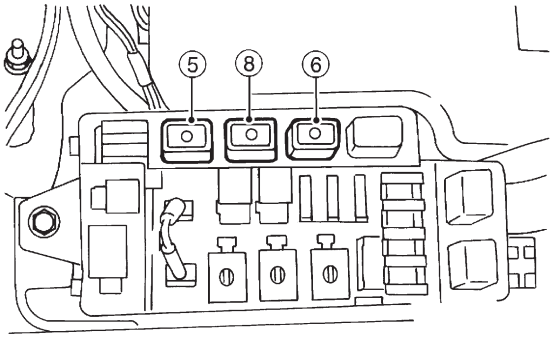

OBD0034A

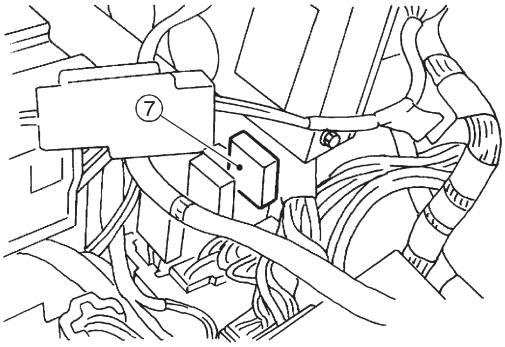

OBD0036A

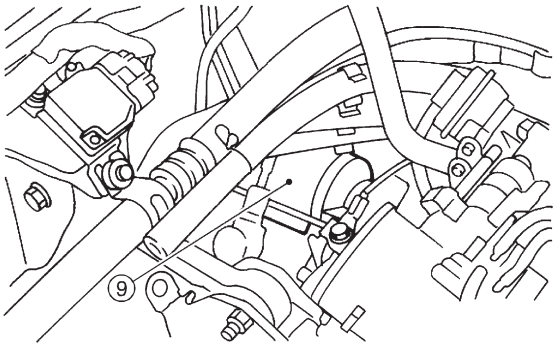

OBD0038A

B: TRANSMISSION

1. MODULE

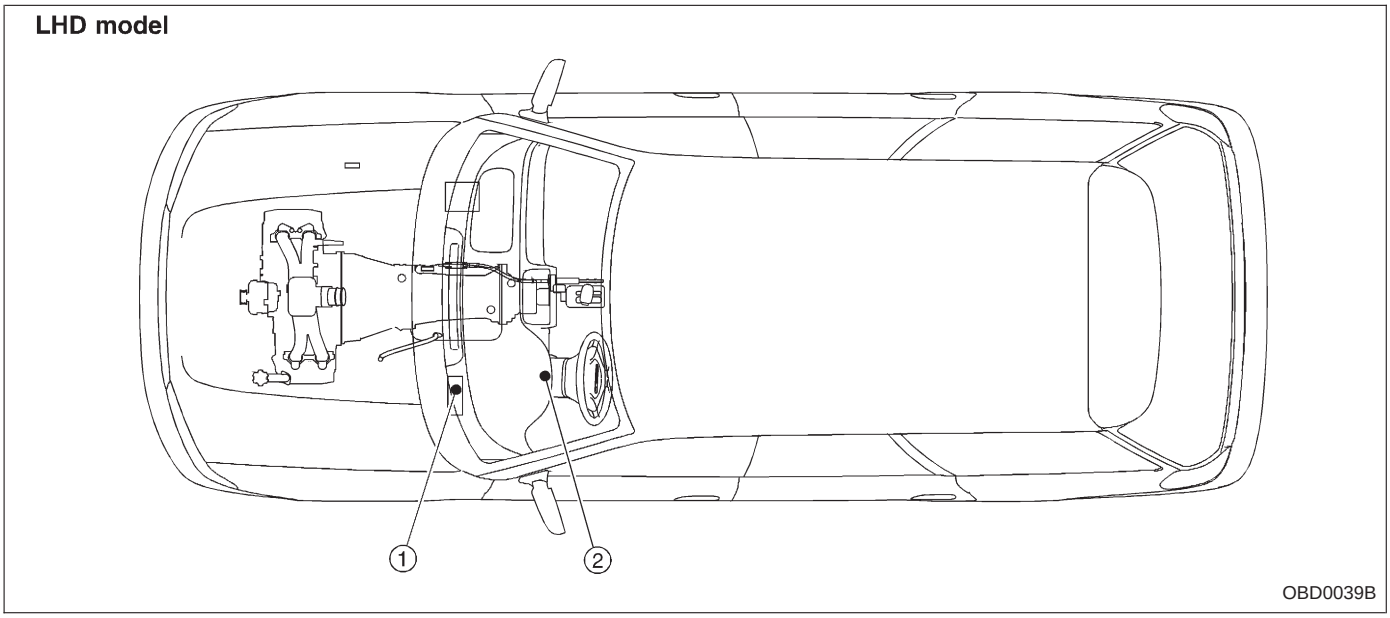

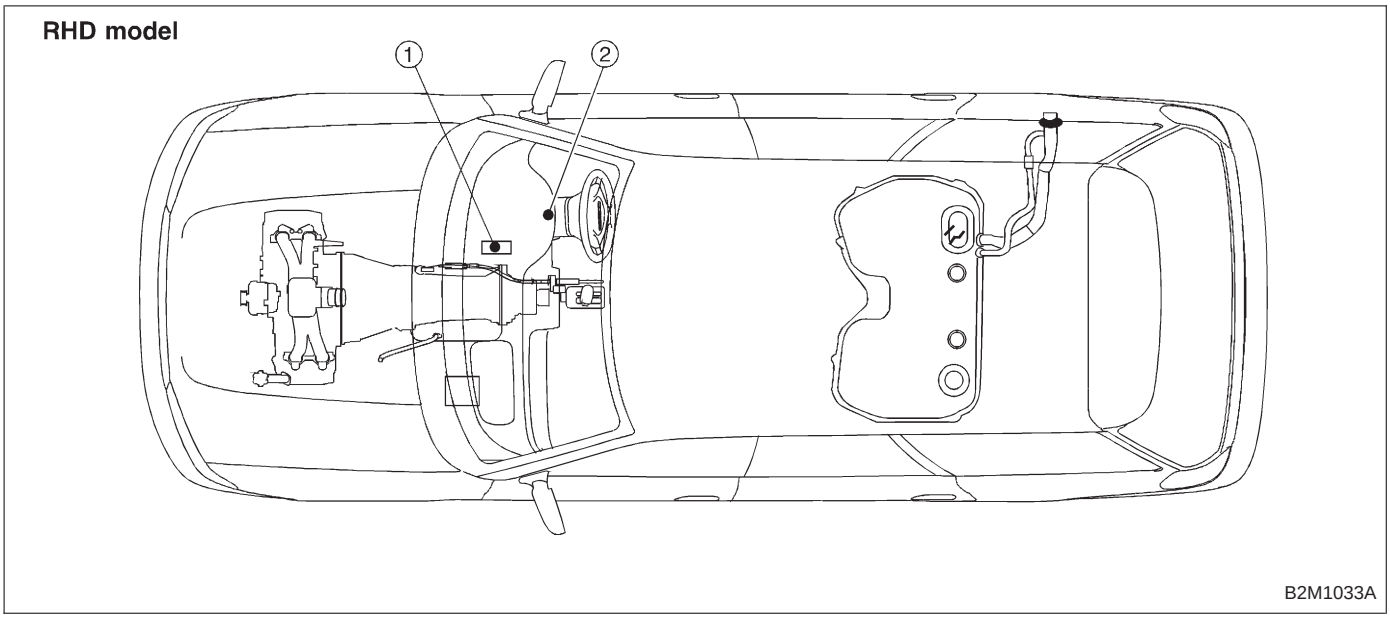

① Transmission Control Module (TCM) [AT vehicles]

② AT diagnostic indicator light [AT vehicles]

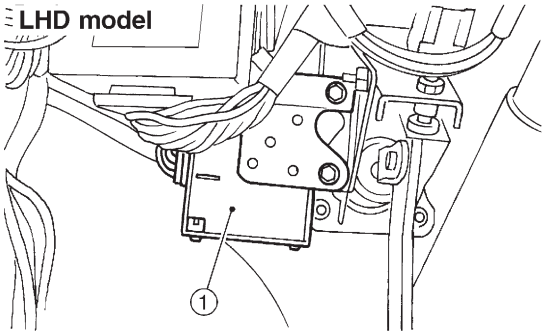

B3M0443F

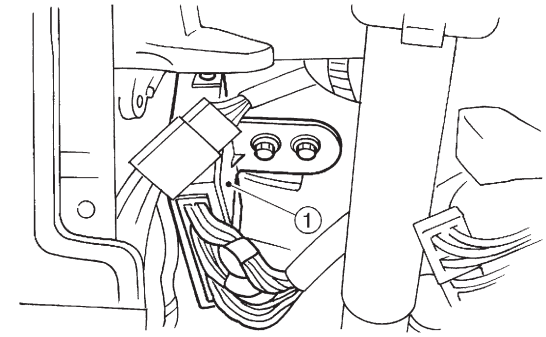

B3M0445D

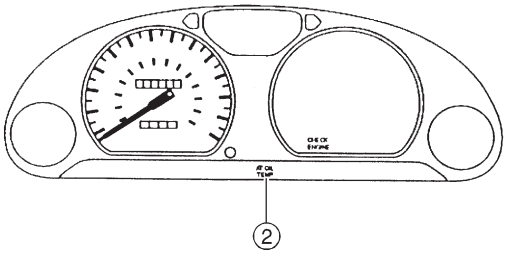

B2M0470B

2. SENSOR

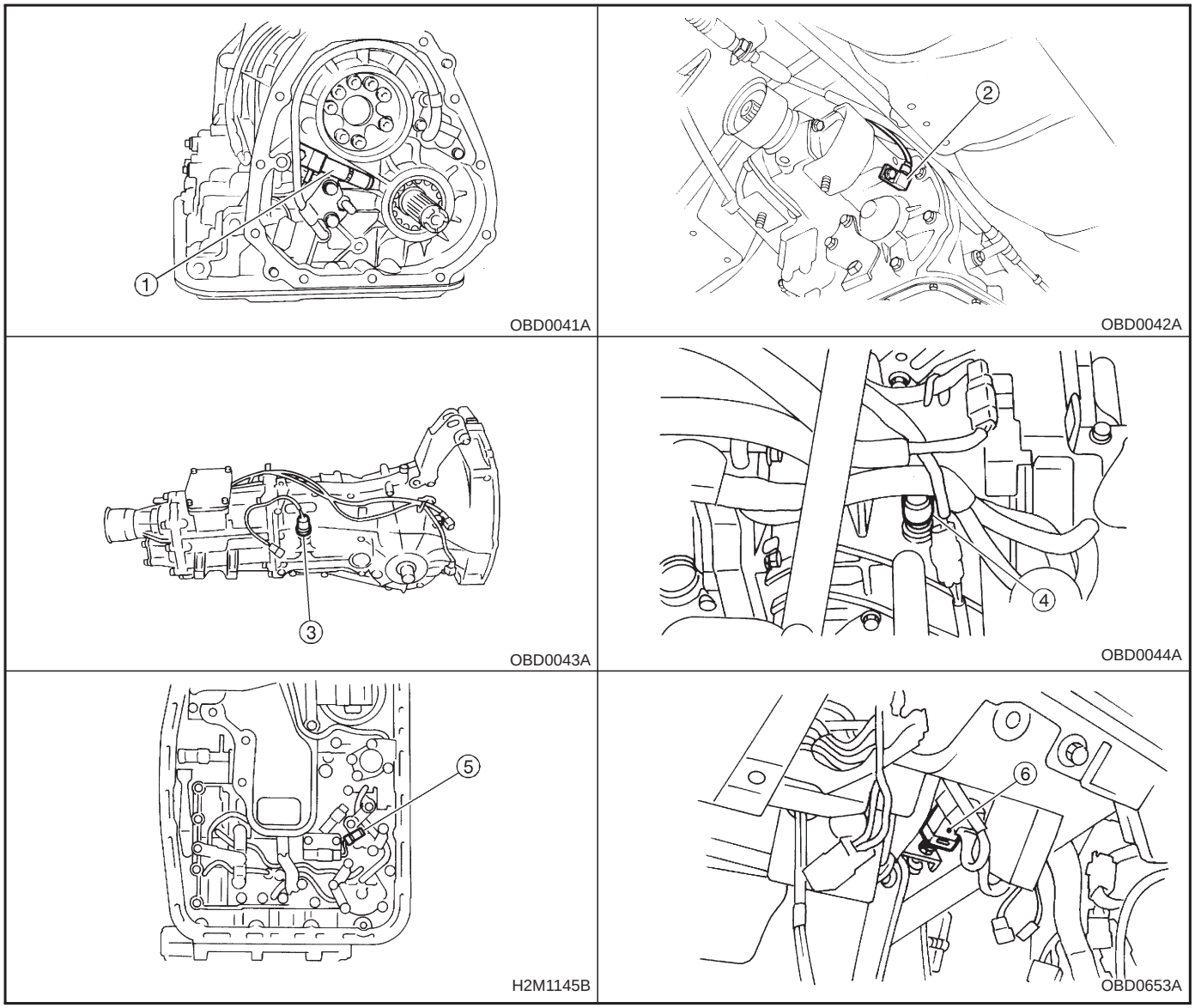

① Vehicle speed sensor 1 [AT FWD vehicles]
② Vehicle speed sensor 1 [AT AWD vehicles]
③ Vehicle speed sensor 2 [MT vehicles]
④ Vehicle speed sensor 2 [AT vehicles]
⑤ ATF temperature sensor [AT vehicles]
⑥ Brake light switch

3. SOLENOID VALVE AND RELAY

● For AT vehicles

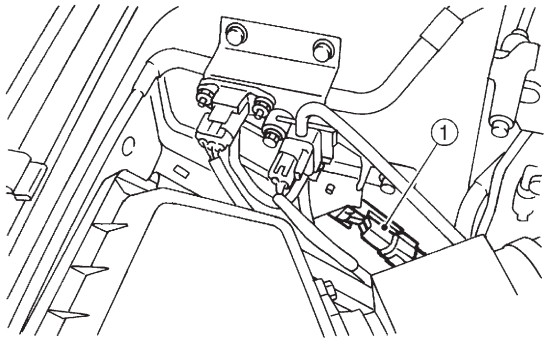

OBD0046B

Aluminum body type

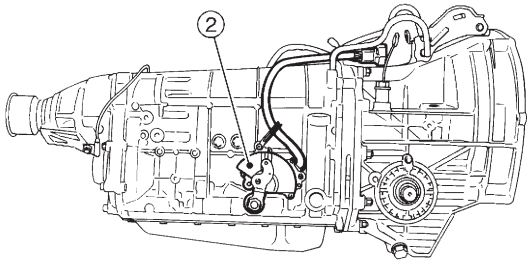

OBD0047D

Plastic body type

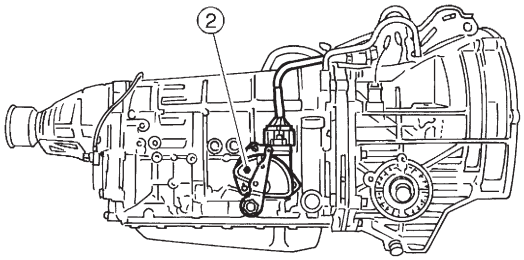

B2M1043D

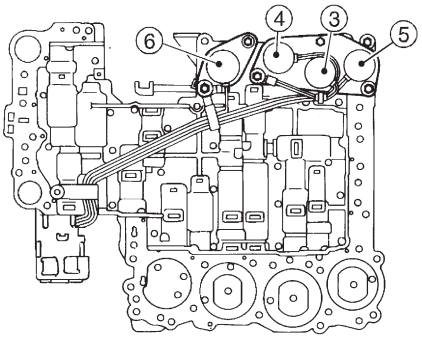

OBD0048A

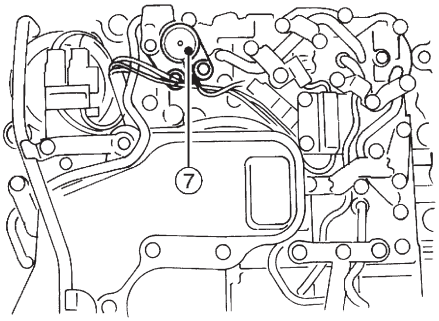

H2M1147A

SUBARU.

① Dropping resistor
② Inhibitor switch
③ Shift solenoid valve 1
④ Shift solenoid valve 2
⑤ Shift solenoid valve 3
⑥ Duty solenoid valve A
⑦ Duty solenoid valve B

● For MT vehicles

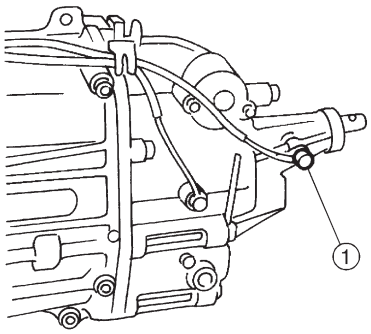

OBD0051A

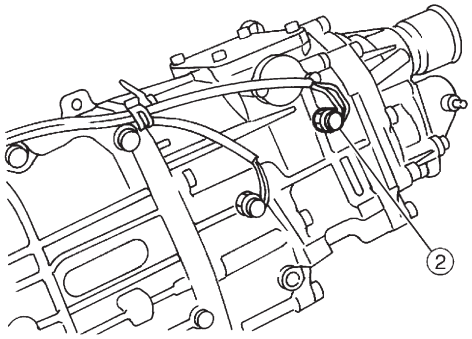

OBD0526A

① Neutral position switch (FWD models)

② Neutral position switch (AWD models)