4. Diagnostics Chart for On-board Diagnostic System

A: BASIC DIAGNOSTICS PROCEDURE

1) Airbag warning light comes “ON”.
2) Turn ignition switch to “ON”, (engine “OFF”) and observe airbag warning light.
3) If airbag warning light stays “ON” after about 7 seconds or remains “OFF”, or comes back “ON” after 30 seconds, this indicates a current problem. Proceed to step 8). If airbag warning light comes “ON” for about 7 seconds, then goes out and stays out, this indicates normal system operation at this time. Check the memory for intermittent problems by performing the procedure outlined in 5-5b [T4B0] “ON-BOARD DIAGNOSTICS”. Proceed to step 4).
4) If trouble code indicated, <Ref. to 5-5b [T4D1] — [T4D2].> proceed to step 5). If normal code indicated, <Ref. to 5-5b [T4D2].> proceed to step 6).
5) Repair and replacement, <Ref. to 5-5b [T5P1].> proceed to step 7).
6) Repair and replacement, <Ref. to 5-5b [T5Q1].> proceed to step 7).
7) Turn ignition switch “ON”, (engine “OFF”) and observe airbag warning light. If airbag warning light stays “ON” after about 7 seconds or comes back “ON” after 30 seconds, proceed to step 8). If airbag warning light comes “ON” for about 7 seconds, then goes out and stays out, proceed to step 9).
8) Repair and replacement. <Ref. to 5-5b [T4E0].> Proceed to step 10).
9) Clear memory. <Ref. to 5-5b [T4C0].> Proceed to step 10).
10) END

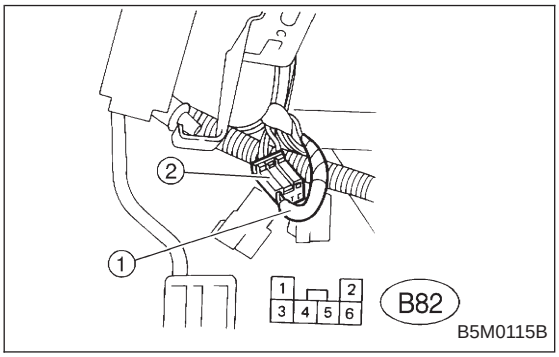

B: ON-BOARD DIAGNOSTIC

When the airbag system is in functioning condition, the airbag warning light will remain on for about 7 seconds and go out when the ignition switch is set to ON.
If there is any malfunction, the airbag warning light will either stay on or off continuously. In such cases, perform on-board diagnostic in accordance with the specified procedure to determine trouble codes.
1) Turn ignition switch ON (with engine OFF).
2) Connect DIAG. terminal ① to No. 1 terminal of diagnosis connector ② located below lower cover.
3) Check in accordance with the trouble code indicated by the AIRBAG warning light, and record the trouble codes.
4) Turn the ignition switch “OFF” and remove the DIAG. terminal from No.1 terminal of diagnosis connector.

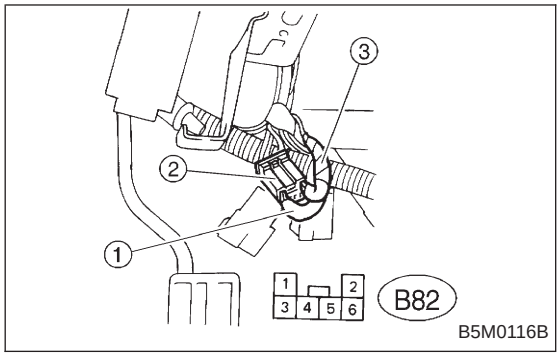

C: CLEAR MEMORY

After eliminating problem as per trouble code, clear memory as follows:
Make sure ignition switch is ON (and engine off). Connect one DIAG. terminal ① on diagnosis connector ② terminal No. 1.
While warning light is flashing, connect the other DIAG. terminal ③ on terminal No. 2 for at least three seconds.
After memory is cleared, normal warning light flashing rate resumes. (Warning light flashes every 0.6 seconds ON-OFF operation.) Memory cannot be cleared if any problem exists.
After clear memory and then DIAG. terminals ① and ③, extract from diagnosis connector ②.

D: LIST OF TROUBLE CODES

1. TROUBLE CODES

Trouble code/Contents of troubles	Memory function	Contents of diagnosis	Page
04	Provided.	1) Airbag main harness circuit is shorted. 2) Airbag module harness (Ps) circuit is shorted. 3) Airbag control module is faulty.	16
11	Provided.	1) Airbag control module is faulty. 2) Airbag main harness circuit is open. 3) Fuse No. 8 is blown. 4) Body harness circuit is open.	17
12	Provided.	1) Airbag main harness circuit is open. 2) Airbag module harness (Dr) circuit is open. 3) Roll connector circuit is open. 4) Airbag control module is faulty.	20
13	Provided.	1) Airbag main harness circuit is shorted. 2) Airbag module harness (Dr) is shorted. 3) Roll connector circuit is shorted. 4) Airbag control module is faulty.	21
14	Not provided.	1) (AB9) and (AB10) are not connected properly. 2) (AB2) and (AB7) are not connected properly. 3) (AB3) and (AB8) are not connected properly. 4) (AB6) is not connected properly to airbag control module.	22
21	Provided.	Airbag control module is faulty.	24
22	Provided.	1) Airbag main harness circuit is open. 2) Airbag module harness (Ps) circuit is open. 3) Airbag control module is faulty.	25
31	Not provided.	1) Airbag control module is faulty. 2) Airbag main harness circuit is open. 3) Fuse No. 16 is blown. 4) Body harness circuit is open.	26
33	Provided.	Airbag module is inflated.	28
34	Provided.	1) Airbag main harness circuit (Ps) is shorted to power supply. 2) Airbag module harness (Ps) is shorted to power supply. 3) Airbag control module is faulty.	29
41	Provided.	1) Airbag main harness circuit (Dr) is shorted to ground. 2) Airbag module harness circuit (Dr) is shorted to ground. 3) Roll connector circuit is shorted to ground. 4) Airbag control module is faulty.	30
42	Provided.	1) Airbag main harness circuit (Ps) is shorted to ground. 2) Airbag module harness circuit (Ps) is shorted to ground. 3) Airbag control module is faulty.	31
43	Provided.	1) Airbag main harness circuit (Dr) is shorted to power supply. 2) Airbag module harness (Dr) is shorted to power supply. 3) Roll connector is shorted to power supply. 4) Airbag control module is faulty.	32

Trouble code/Contents of troubles	Memory function	Contents of diagnosis	Page
Airbag warning light remains on.	Not provided.	1) Airbag warning light is faulty. 2) Airbag control module to airbag warning light harness circuit is shorted or open. 3) Grounding circuit is faulty. 4) Airbag control module is faulty. 5) (AB1) and (B39) are not connected properly.	33
Airbag warning light remains off.	Not provided.	1) Fuse No. 15 is blown. 2) Body harness circuit is open. 3) Airbag warning light is faulty. 4) Airbag main harness is faulty. 5) Airbag control module is faulty.	36
Warning light indicates trouble code, then normal code. (Flashing trouble code.)	Provided.	Airbag system component parts are faulty.	38
Warning light indicates trouble code, then normal code. (Flashing normal code.)	Not provided.	1) Airbag connector is faulty. 2) Fuse No. 16 is blown. 3) Airbag main harness is faulty. 4) Airbag control module is faulty. 5) Body harness is faulty.	41

[NOTE] Dr: Driver side Ps: Passenger side

2. HOW TO READ TROUBLE CODES

The AIRBAG warning light flashes a code corresponding to the faulty parts.
The long segment (1.2 sec on) indicates a “ten”, and the short segment (0.3 sec on) indicates a “one”.

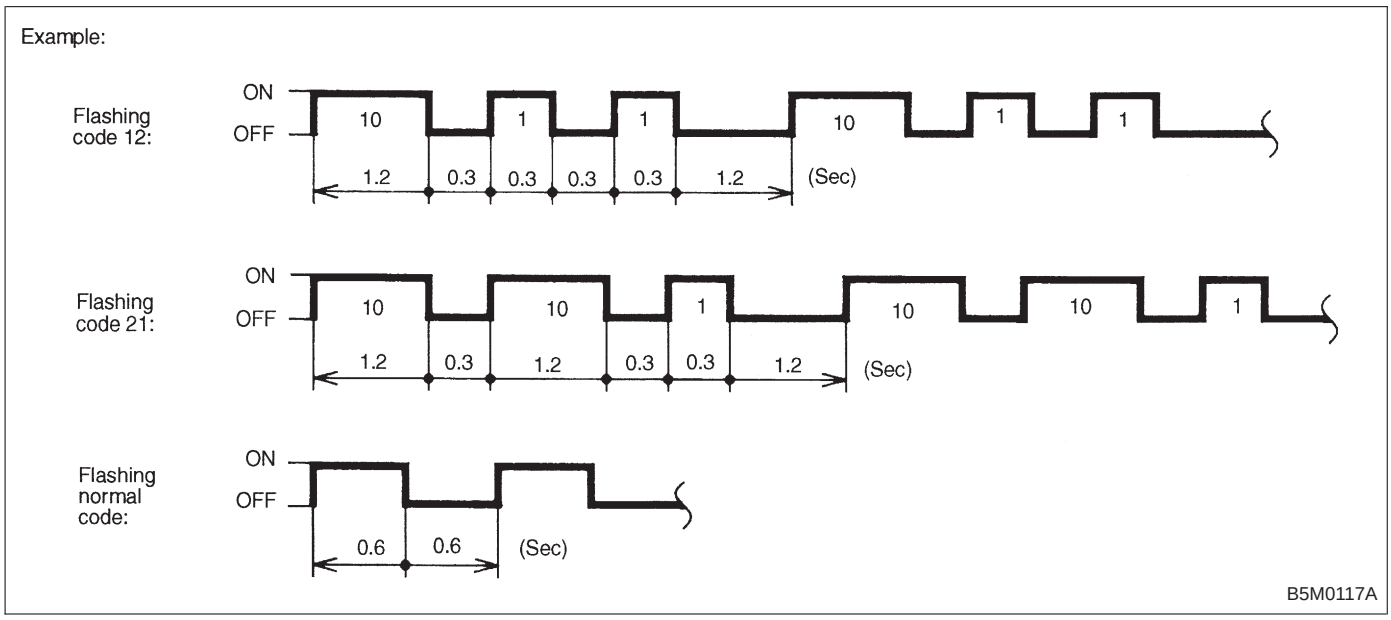

E: DIAGNOSTICS PROCEDURE

1. AIRBAG WARNING LIGHT STAYS ON AFTER ABOUT 7 SECONDS.

1) Perform on-board diagnostic. <Ref. to 5-5b [T4B0].>

2) Are trouble codes 4, 12, 13, 22, 34, 41, 42 or 43 indicated? <Ref. to 5-5b [T4D1]—[T4D2].>
Record trouble codes. If “YES” proceed to step 4). If “NO” proceed to step 3).

3) Proceed with diagnostics and repair according to trouble code indicated then perform step 15).

4) If codes 4, 22, 34, 42 are indicated, proceed to step 5). If codes 4, 22, 34, 42 are not indicated, proceed to step 10).

5) If codes 12, 13, 41, 43 are indicated, proceed to step 6). If codes 12, 13, 41, 43 are not indicated, proceed to step 11).

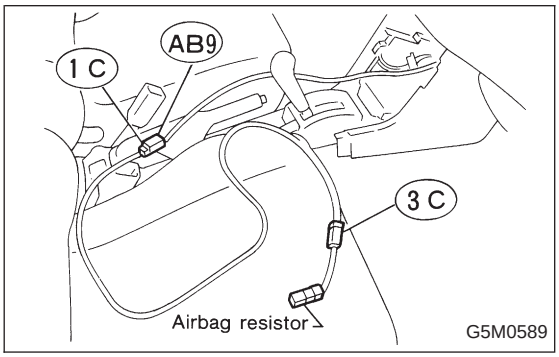

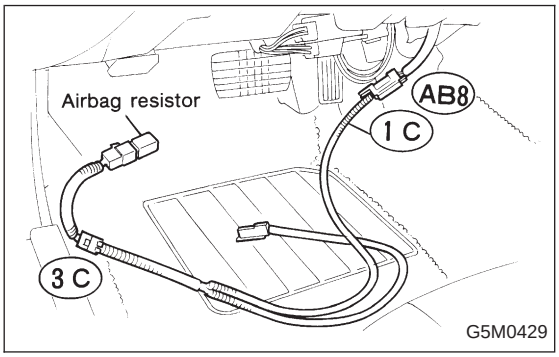

6) Turn ignition switch “OFF”, disconnect battery ground cable, and wait 20 seconds. Disconnect passenger side airbag module connector (AB9) to (AB10). <Ref. to 5-5b [W3A2].> Connect test harness C connector (1C) to (AB9). Connect airbag resistor to test harness C connector (3C). Remove lower cover panel and connect test harness C connector (1C) to (AB8) <Ref. to 5-4 [W1A0].> with airbag resistor attached to test harness C connector (3C).
Connect battery ground cable and turn ignition switch “ON”. Does airbag warning light go “OFF” after about 7 seconds and remain off for more than 30 seconds?
See “NOTE:”.
If “YES” proceed to step 7).
If “NO” proceed to step 3).

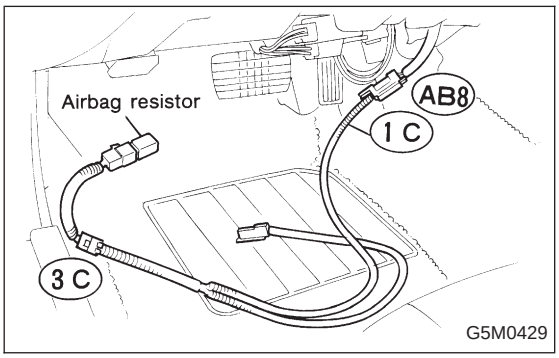

7) Turn ignition switch “OFF”, disconnect battery ground cable, and wait 20 seconds. Connect passenger side airbag module connector (AB9) to (AB10). Connect battery ground cable and turn ignition switch “ON”. Does airbag warning light go “OFF” after about 7 seconds and remain off for more than 30 seconds?
See “NOTE:”.
If “YES” proceed to step 8).
If “NO” proceed to step 13).

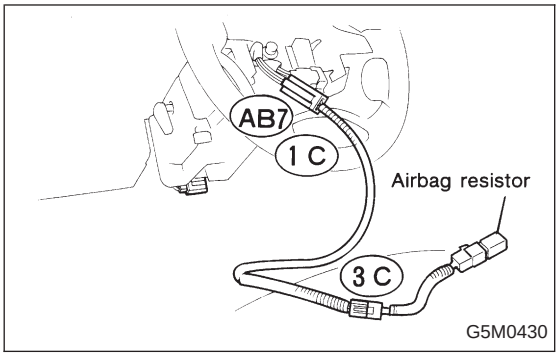

8) Turn ignition switch “OFF”, disconnect battery ground cable, and wait 20 seconds. Connect connector (AB8) to (AB3). Remove driver side airbag module and connect test harness C connector (1C) to (AB7). <Ref. to 5-5b [W3A1].> Connect airbag resistor to test harness C connector (3C). Connect battery ground cable and turn ignition switch “ON”. Does airbag warning light go “OFF” after about 7 seconds and remain off for more than 30 seconds?
See “NOTE:”.
If “YES” proceed to step 9).
If “NO” proceed to step 14).

9) Turn ignition switch “OFF”, disconnect battery ground cable, and wait 20 seconds. Replace with a new driver side airbag module. <Ref. to 5-5b [W3A1].> Proceed to step 15).

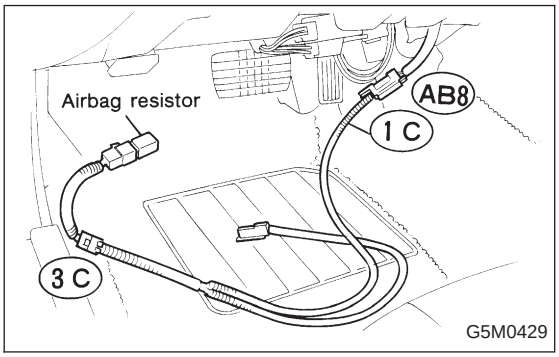

10) Turn ignition switch “OFF”, disconnect battery ground cable, and wait 20 seconds. Remove lower cover panel and connect test harness C connector (1C) to (AB8) <Ref. to 5-4 [W1A0].> with airbag resistor attached to test harness C connector (3C).
Connect battery ground cable and turn ignition switch “ON”. Does airbag warning light go “OFF” after about 7 seconds and remain off for more than 30 seconds?
See “NOTE:”.
If “YES” proceed to step 8).
If “NO” proceed to step 3).

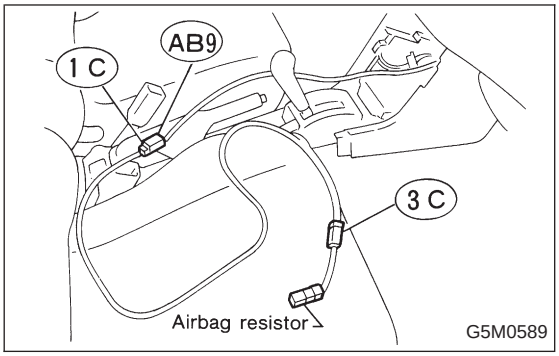

11) Turn ignition switch “OFF”, disconnect battery ground cable, and wait 20 seconds. Disconnect passenger side airbag module connector (AB9) to (AB10). <Ref. to 5-5b [W3A2].>
Connect test harness C connector (1C) to (AB9). Connect airbag resistor to test harness C connector (3C).
Connect battery ground cable and turn ignition switch “ON”. Does airbag warning light go “OFF” after about 7 seconds and remain off for more than 30 seconds?
See “NOTE:”.
If “YES” proceed to step 12).
If “NO” proceed to step 3).

12) Turn ignition switch “OFF”, disconnect battery ground cable, and wait 20 seconds. Replace with a new passenger side airbag module <Ref. to 5-5b [W3A2].> then proceed to step 15).

13) Turn ignition switch “OFF”, disconnect battery ground cable and wait 20 seconds. Replace with a new passenger side airbag module <Ref. to 5-5b [W3A2].> then proceed to step 7).

14) Turn ignition switch “OFF”, disconnect battery ground cable, and wait 20 seconds. Replace with a new combination switch, <Ref. to 5-5b [W6A0].> and install driver side airbag module <Ref. to 5-5b [W3B0].>.
Connect battery ground cable and turn ignition switch “ON”. Does airbag warning light go “OFF” after about 7 seconds and remain off for more than 30 seconds?
See “NOTE:”.
If “YES” proceed to step 16).
If “NO” proceed to step 9).

15) Connect battery ground cable and turn ignition switch “ON”. Does airbag warning light go “OFF” after about 7 seconds and remain off for more than 30 seconds? See “NOTE:”.
If “YES” proceed to step 16).
If “NO” proceed to step 1).

16) Perform clear memory procedure. <Ref. to 5-5b [T4C0].>
If memory cannot be cleared, another trouble code exists. Return to step 1).
If memory can be cleared, proceed to step 17).

17) END

NOTE:
- Always remember to secure the green double locks before turning the ignition switch “ON”.
- In some cases the airbag warning light will go “OFF” after about 7 seconds but will turn “ON” again within 30 seconds. In this case continue diagnostics with the basic diagnostics procedures or trouble code procedures.