5. Diagnostics Chart with Trouble Code

<Ref. to 5-5b [T4D1].>

A: TROUBLE CODE 04

DIAGNOSIS:

- Airbag main harness circuit is shorted.
- Airbag module harness (Passenger) circuit is shorted.
- Airbag control module is faulty.

1. Airbag main harness inspection

CAUTION:
Before performing diagnostics on airbag system, turn ignition switch "OFF", disconnect battery ground cable and then wait at least 20 seconds.
After 20 seconds elapse, remove instrument panel lower cover, and disconnect (AB3) and (AB8), (AB9) and (AB10).

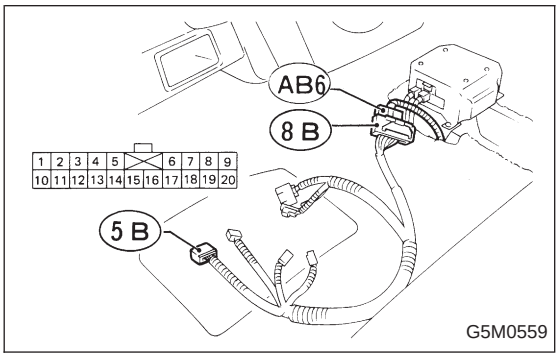

1. AIRBAG MAIN HARNESS INSPECTION

1) Disconnect connector (AB6) from airbag control module <Ref. to 5-5b [W5A0].>, and connect it to test harness B2 connector (8B).

2) Measure resistance between test harness B2 connector (5B) terminal.

CHECK : ***Connector & terminal (5B) No. 6 — (5B) No. 7: Is resistance more than 10 kΩ?***

YES : Replace airbag control module.

NO : Replace airbag main harness.

B: TROUBLE CODE 11

DIAGNOSIS:

- Airbag control module is faulty.
- Airbag main harness circuit is open.
- Fuse No. 8 is blown.
- Body harness circuit is open.

1. Airbag control module inspection

↓

2. Airbag main harness inspection

↓

3. Fuse No. 8 inspection

CAUTION:
Before performing diagnostics on airbag system, turn ignition switch "OFF", disconnect battery ground cable and then wait at least 20 seconds.
After 20 seconds elapse, remove instrument panel lower cover, and disconnect (AB3) and (AB8), (AB9) and (AB10).

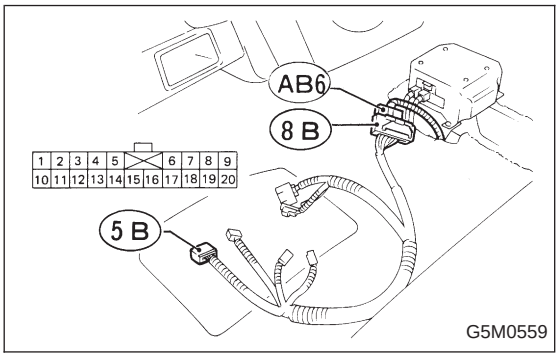

1. AIRBAG CONTROL MODULE INSPECTION

1) Disconnect connector (AB6) from airbag control module <Ref. to 5-5b [W5A0].> and connect it to test harness B2 connector (8B).

2) Connect battery ground cable and turn ignition switch "ON". (engine off)

3) Measure voltage across connector (5B) terminal and chassis ground.

CHECK : ***Connector & terminal (5B) No. 2 (+) — Chassis ground (−): Is voltage more than 10 V?***

YES : Replace airbag control module.

NO : Go to step **2**.

2. AIRBAG MAIN HARNESS INSPECTION

1) Go to step 2) below after performing diagnostics on airbag system as per diagnosis procedure under “1. AIRBAG CONTROL MODULE INSPECTION” previously outlined.
2) Turn ignition switch “OFF”, disconnect battery ground terminal and then wait at least 20 seconds.

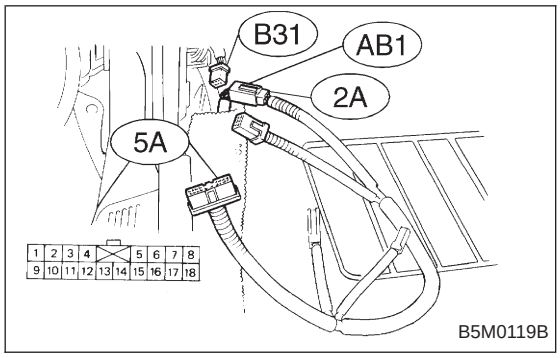

3) Disconnect body harness connector (B31) from connector (AB1) at front lower pillar, and connect connector (AB1) to test harness A connector (2A).

4) Measure resistance between test harness A connector (5A) terminal and test harness B2 connector (5B) terminal.

CHECK : ***Connector & terminal***
(5A) No. 1 — (5B) No. 2:
Is resistance less than 10 Ω?

YES : Go to step 5).

NO : Replace airbag main harness.

5) Measure resistance between (5A) and (5B) connector terminals and chassis ground.

CHECK : ***Connector & terminal***
(5A) No. 1 (+) — Chassis ground (−):
Is resistance more than 10 kΩ?

YES : Go to next CHECK .

NO : Replace airbag main harness.

CHECK : ***Connector & terminal***
(5B) No. 2 (+) — Chassis ground (−):
Is resistance more than 10 kΩ?

YES : Go to step **3**.

NO : Replace airbag main harness.

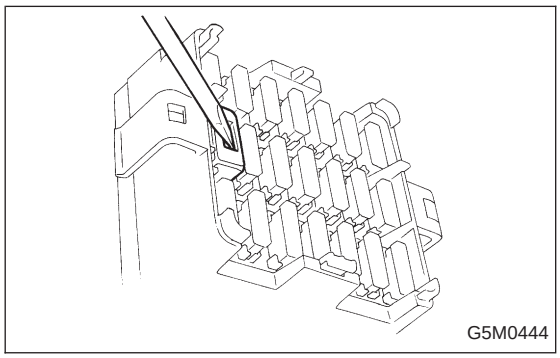

3. FUSE No. 8 INSPECTION

1) Turn ignition switch “OFF”, and remove airbag fuse protector.

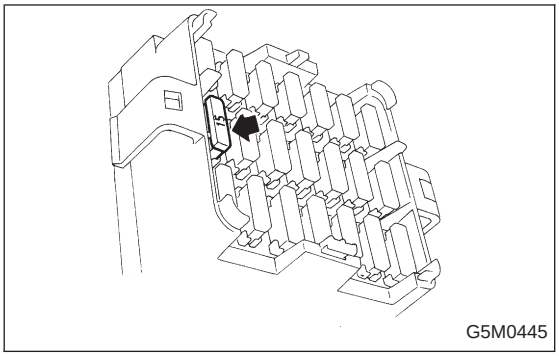

2) Remove and visually check fuse No. 8.

CHECK ***: Is fuse No. 8 blown?***

YES : Replace fuse No. 8 if fuse No. 8 blows again, repair body harness.

NO : Repair body harness.

C: TROUBLE CODE 12

DIAGNOSIS:

- Airbag main harness circuit is open.
- Airbag module harness (Driver) circuit is open.
- Roll connector circuit is open.
- Airbag control module is faulty.

1. Airbag main harness inspection

CAUTION:
Before performing diagnostics on airbag system, turn ignition switch "OFF", disconnect battery ground cable and then wait at least 20 seconds.

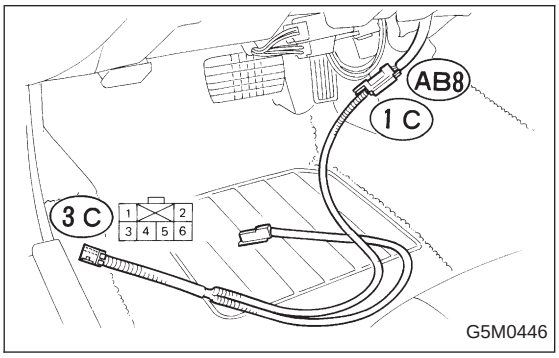

1. AIRBAG MAIN HARNESS INSPECTION

1) Remove lower cover panel <Ref. to 5-4 [W1A0].>, and connect connector (AB8) below steering column to test harness C connector (1C).

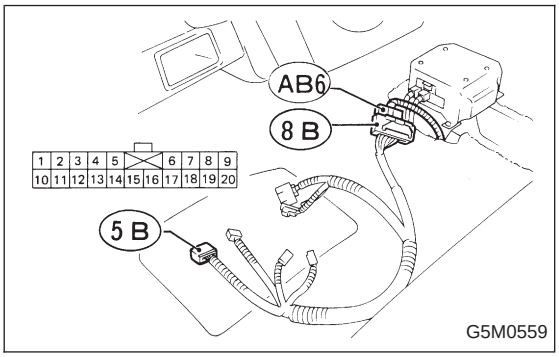

2) Disconnect connector (AB6) <Ref. to 5-5b [W5A0].> from airbag control module, and connect it to test harness B2 connector (8B) terminal.

3) Measure resistance between test harness B2 connector (5B) and test harness C connector (3C) terminals.

CHECK : ***Connector & terminal (5B) No. 14 — (3C) No. 4: Is resistance less than 10 Ω?***

YES : Go to next CHECK .

NO : Replace airbag main harness.

CHECK : ***Connector & terminal (5B) No. 1 — (3C) No. 3: Is resistance less than 10 Ω?***

YES : Replace airbag control module.

NO : Replace airbag main harness.

D: TROUBLE CODE 13

DIAGNOSIS:

- Airbag main harness circuit is shorted.
- Airbag module harness (Driver) is shorted.
- Roll connector circuit is shorted.
- Airbag control module is faulty.

1. Airbag main harness inspection

CAUTION:
Before performing diagnostics on airbag system, turn ignition switch "OFF", disconnect battery ground cable and then wait at least 20 seconds.
After 20 seconds elapse, remove instrument panel lower cover, and disconnect (AB3) and (AB8), (AB9) and (AB10).

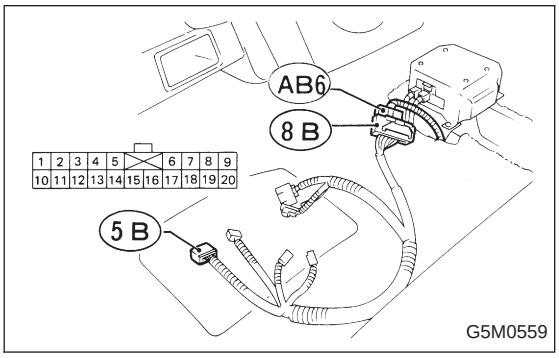

1. AIRBAG MAIN HARNESS INSPECTION

1) Disconnect connector (AB6) from airbag control module <Ref. to 5-5b [W5A0].>, and connect it to test harness B2 connector (8B).

2) Measure resistance between test harness B2 connector (5B) terminal.

CHECK : ***Connector & terminal (5B) No. 1 — (5B) No. 14: Is resistance more than 10 kΩ?***

YES : Replace airbag control module.

NO : Replace airbag main harness.

E: TROUBLE CODE 14

DIAGNOSIS:

- (AB9) and (AB10) are not connected properly.
- (AB2) and (AB7) are not connected properly.
- (AB3) and (AB8) are not connected properly.
- (AB6) is not connected properly to airbag control module.

1. Double lock inspection for connectors (AB9) and (AB10)

↓

2. Airbag control module double lock inspection at connector (AB6)

↓

3. Double lock inspection for connectors (AB3) and (AB8)

↓

4. Roll connector double lock inspection at connectors (AB2) and (AB7)

CAUTION:
Before performing diagnostics on airbag system, turn ignition switch "OFF", disconnect battery ground cable and then wait at least 20 seconds.

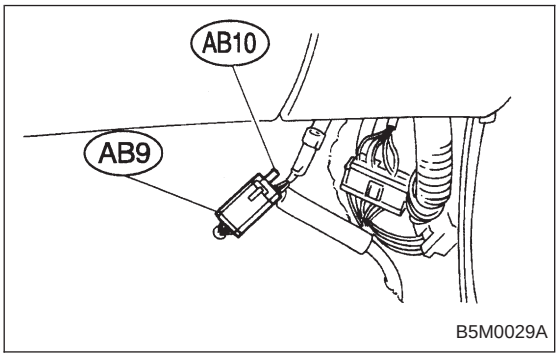

B5M0029A

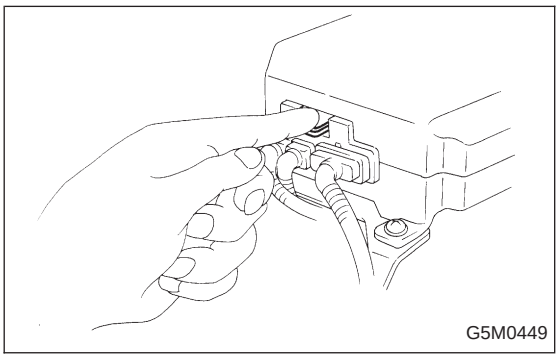
G5M0449

1. DOUBLE LOCK INSPECTION FOR CONNECTORS (AB9) AND (AB10)

1) Remove front pillar lower trim (Passenger side). <Ref. to 5-3 [W5A1].>
2) Check double lock of connectors (AB9) and (AB10).

CHECK : ***Is there poor contact in double lock of connectors (AB9) and (AB10)?***

YES : Repair poor contact in double lock of connectors (AB9) and (AB10).

NO : Go to step **2**.

2. AIRBAG CONTROL MODULE DOUBLE LOCK INSPECTION AT CONNECTOR (AB6)

Check double lock of connector (AB6) connected to airbag control module. <Ref. to 5-5b [W5A0].>

CHECK : ***Is there poor contact in double lock of connector (AB6)?***

YES : Repair poor contact in double lock of connector (AB6).

NO : Go to step **3**.

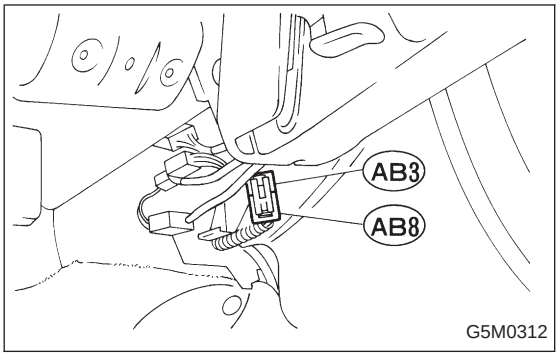

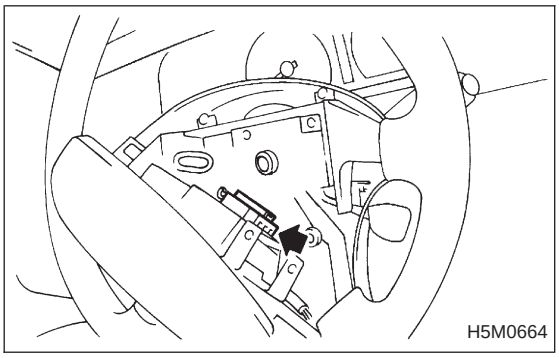

3. DOUBLE LOCK INSPECTION FOR CONNECTORS (AB3) AND (AB8)

1) Remove lower cover panel. <Ref. to 5-4 [W1A0].>
2) Check double lock of connectors (AB3) and (AB8) below steering column.

CHECK : ***Is there poor contact in double lock of connectors (AB3) and (AB8)?***

YES : Repair poor contact in double lock of connectors (AB3) and (AB8).

NO : Go to step **4**.

4. ROLL CONNECTOR DOUBLE LOCK INSPECTION AT CONNECTORS (AB2) AND (AB7)

Remove driver side airbag module <Ref. to 5-5b [W3A1].>, and check double lock of connectors (AB2) and (AB7) at roll connector.

CHECK : ***Is there poor contact in double lock of connectors (AB2) and (AB7)?***

YES : Repair poor contact in double lock of connectors (AB2) and (AB7).

NO : Replace airbag control module.

F: TROUBLE CODE 21

DIAGNOSIS:

- Airbag control module is faulty.

1. Check if trouble code 21 is indicated.

CAUTION:
Before performing diagnostics on airbag system, turn ignition switch "OFF", disconnect battery ground terminal, and then wait at least 20 seconds. <Ref. to 5-5b [W5A0].>

1. CHECK IF TROUBLE CODE 21 IS INDICATED.

Confirm flashing trouble code according to 5-5b [T4A0] "BASIC DIAGNOSTICS PROCEDURE".

CHECK : ***Is airbag warning light trouble code 21 indicated?***

YES : Replace airbag control module.

NO : Clear memory.

G: TROUBLE CODE 22

DIAGNOSIS:

- Airbag main harness circuit is open.
- Airbag module harness (Passenger) circuit is open.
- Airbag control module is faulty.

1. Airbag main harness inspection

CAUTION:
Before performing diagnostics on airbag system, turn ignition switch "OFF", disconnect battery ground cable and then wait at least 20 seconds.

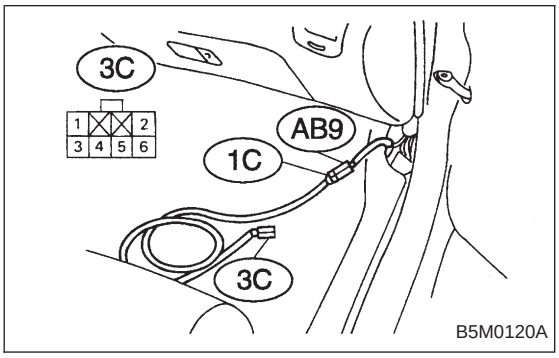

1. AIRBAG MAIN HARNESS INSPECTION

1) Remove front pillar lower trim (Passenger side). <Ref. to 5-3 [W5A1].>, disconnect connector (AB9) and (AB10) and connect connector (AB9) to test harness C connector (1C).

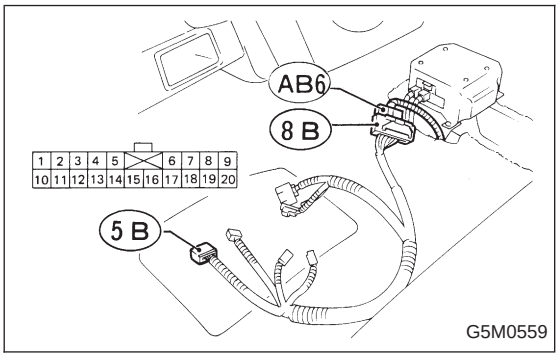

2) Disconnect connector (AB6) <Ref. to 5-5b [W5A0].> from airbag control module, and connect it to test harness B2 connector (8B) terminal.

3) Measure resistance between test harness B2 connector (5B) and test harness C connector (3C) terminals.

CHECK : ***Connector & terminal (5B) No. 6 — (3C) No. 4: Is resistance less than 10 Ω?***

YES : Go to next CHECK .

NO : Replace airbag main harness.

CHECK : ***Connector & terminal (5B) No. 7 — (3C) No. 3: Is resistance less than 10 Ω?***

YES : Replace airbag control module.

NO : Replace airbag main harness.

H: TROUBLE CODE 31

DIAGNOSIS:

- Airbag control module is faulty.
- Airbag main harness circuit is open.
- Fuse No. 16 is blown.
- Body harness circuit is open.

1. Airbag control module inspection

↓

2. Airbag main harness inspection

↓

3. Fuse No. 16 inspection

CAUTION:
Before performing diagnostics on airbag system, turn ignition switch "OFF", disconnect battery ground cable and then wait at least 20 seconds.
After 20 seconds elapse, remove instrument panel lower cover, and disconnect (AB3) and (AB8), (AB9) and (AB10).

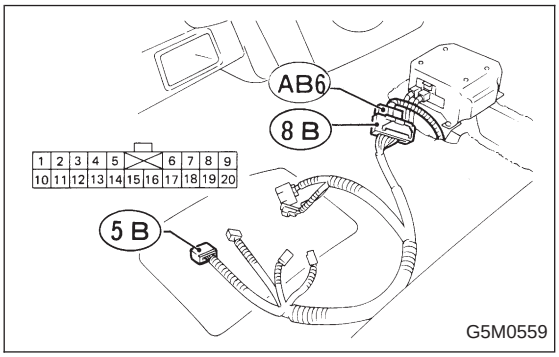

1. AIRBAG CONTROL MODULE INSPECTION

1) Disconnect connector (AB6) from airbag control module <Ref. to 5-5b [W5A0].>, and connect it to test harness B2 connector (8B).

2) Connect battery ground cable and turn ignition switch "ON" (engine off).

3) Measure voltage across connector (5B) terminal and chassis ground.

CHECK : ***Connector & terminal (5B) No. 5 (+) — Chassis ground (−): Is voltage more than 10 V?***

YES : Replace airbag control module.

NO : Go to step **2**.

2. AIRBAG MAIN HARNESS INSPECTION

1) Go to step 2) below after performing diagnostics on airbag system as per diagnosis procedure under “1. AIRBAG CONTROL MODULE INSPECTION” previously outlined.
2) Turn ignition switch “OFF”, disconnect battery ground cable and then wait at least 20 seconds.

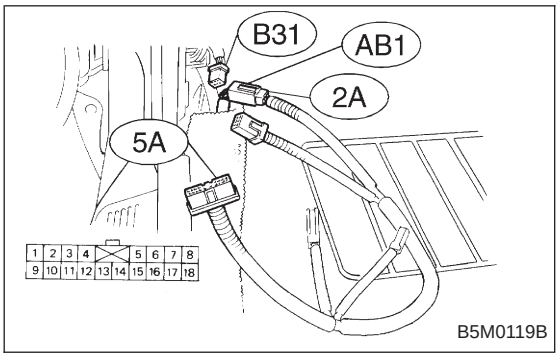

3) Disconnect connector (AB1) from body harness connector (B31) at front lower pillar (driver side), and connect connector (AB1) to test harness A connector (2A).

4) Measure resistance between test harness A connector (5A) and test harness B2 connector (5B) terminals.

CHECK : ***Connector & terminal (5A) No. 9 — (5B) No. 5: Is resistance less than 10 Ω?***

YES : Go to step 5).

NO : Replace airbag main harness.

5) Measure resistance between each terminal of connectors (5A) and (5B) and chassis ground.

CHECK : ***Connector & terminal (5A) No. 9 (+) — Chassis ground (−):***

YES : Go to next CHECK .

NO : Replace airbag main harness.

CHECK : ***Connector & terminal (5B) No. 5 (+) — Chassis ground (−): Is resistance more than 10 kΩ?***

YES : Go to step **3**.

NO : Replace airbag main harness.

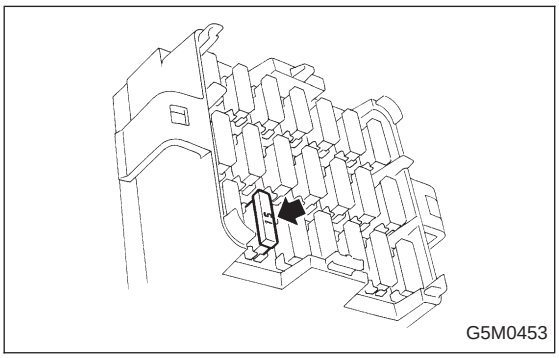

3. FUSE No. 16 INSPECTION

Make sure ignition switch is turned “OFF”, then remove and visually check fuse No. 16.

CHECK : ***Is fuse No. 16 blown?***

YES : Replace fuse No. 16. If fuse No. 16 blows again, repair body harness.

NO : Repair body harness.

I: TROUBLE CODE 33

DIAGNOSIS:

- Airbag module is inflated.

1. Check if trouble code 33 is indicated.

CAUTION:
Before performing diagnostics on airbag system, turn ignition switch "OFF", disconnect battery ground terminal, and then wait at least 20 seconds. <Ref. to 5-5 [W6A0].>

1. CHECK IF TROUBLE CODE 33 IS INDICATED.

Confirm flashing trouble code according to 5-5b [T4A0] "BASIC DIAGNOSTICS PROCEDURE".

CHECK : ***Is airbag warning light trouble code 33 indicated?***

YES : Replace airbag control module.

NO : Clear memory.

J: TROUBLE CODE 34

DIAGNOSIS:

- Airbag main harness circuit (Passenger) is shorted to power supply.
- Airbag module harness (Passenger) is shorted to power supply.
- Airbag control module is faulty.

1. Airbag main harness inspection

CAUTION:
Before performing diagnostics on airbag system, turn ignition switch "OFF", disconnect battery ground terminal and then wait at least 20 seconds.
After 20 seconds elapse, remove instrument panel lower cover, and disconnect (AB3) and (AB8), (AB9) and (AB10).

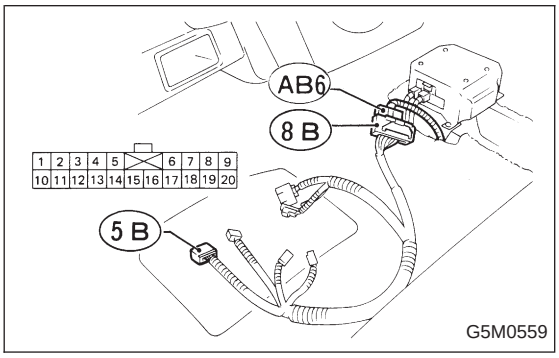

1. AIRBAG MAIN HARNESS INSPECTION

1) Disconnect connector (AB6) from airbag control module <Ref. to 5-5b [W5A0].>, and connect it to test harness B2 connector (8B).

2) Connect battery ground cable and turn ignition switch "ON" (engine off).

3) Measure voltage across each test harness B2 connector (5B) terminal and chassis ground.

CHECK : ***Connector & terminal (5B) No. 6 (+) — Chassis ground (−): Is voltage less than 1 V?***

YES : Go to next CHECK .

NO : Replace airbag main harness.

CHECK : ***Connector & terminal (5B) No. 7 (+) — Chassis ground (−): Is voltage less than 1 V?***

YES : Replace airbag control module.

NO : Replace airbag main harness.

K: TROUBLE CODE 41

DIAGNOSIS:

- Airbag main harness circuit (Driver) is shorted to ground.
- Airbag module harness (Driver) is shorted to ground.
- Roll connector circuit is shorted to ground.
- Airbag control module is faulty.

1. Airbag main harness inspection

CAUTION:
Before performing diagnostics on airbag system, turn ignition switch "OFF", disconnect battery ground cable and then wait at least 20 seconds.
After 20 seconds elapse, remove instrument panel lower cover, and disconnect (AB3) and (AB8), (AB9) and (AB10).

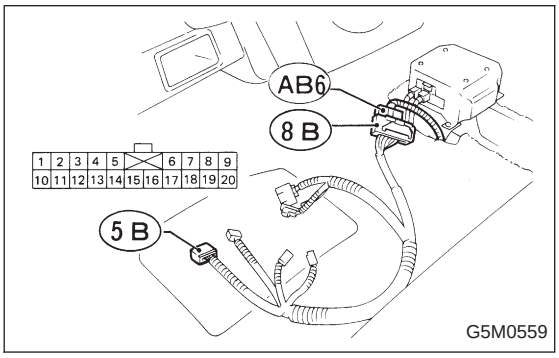

1. AIRBAG MAIN HARNESS INSPECTION

1) Disconnect connector (AB6) from airbag control module <Ref. to 5-5b [W5A0].>, and connect it to test harness B2 connector (8B).

2) Measure resistance between test harness B2 connector (5B) terminals and chassis ground.

CHECK : ***Connector & terminal (5B) No. 1 (+) — Chassis ground (−): Is resistance more than 200 Ω?***

YES : Go to next CHECK .

NO : Replace airbag main harness.

CHECK : ***Connector & terminal (5B) No. 14 (+) — Chassis ground (−): Is resistance more than 200 Ω?***

YES : Replace airbag control module.

NO : Replace airbag main harness.

L: TROUBLE CODE 42

DIAGNOSIS:

- Airbag main harness circuit (Passenger) is shorted to ground.
- Airbag module harness circuit (Passenger) is shorted to ground.
- Airbag control module is faulty.

1. Airbag main harness inspection

CAUTION:
Before performing diagnostics on airbag system, turn ignition switch "OFF", disconnect battery ground cable and then wait at least 20 seconds.
After 20 seconds elapse, remove instrument panel lower cover, and disconnect (AB3) and (AB8), (AB9) and (AB10).

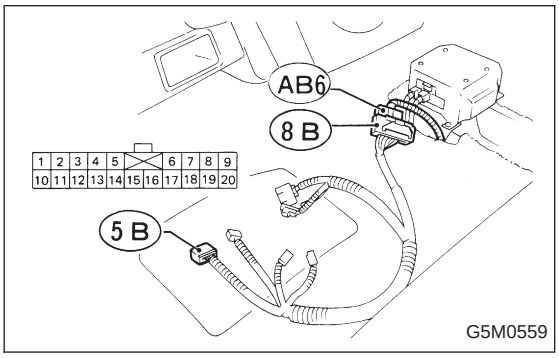

1. AIRBAG MAIN HARNESS INSPECTION

1) Disconnect connector (AB6) from airbag control module <Ref. to 5-5b [W5A0].>, and connect it to test harness B2 connector (8B).

2) Measure resistance between test harness B2 connector (5B) terminals and chassis ground.

CHECK : ***Connector & terminal (5B) No. 6 (+) — Chassis ground (−): Is resistance more than 200 Ω?***

YES : Go to next CHECK .

NO : Replace airbag main harness.

CHECK : ***Connector & terminal (5B) No. 7 (+) — Chassis ground (−): Is resistance more than 200 Ω?***

YES : Replace airbag control module.

NO : Replace airbag main harness.

M: TROUBLE CODE 43

DIAGNOSIS:

- Airbag main harness circuit (Driver) is shorted to power supply.
- Airbag module harness (Driver) is shorted to power supply.
- Roll connector is shorted to power supply.
- Airbag control module is faulty.

1. Airbag main harness inspection

CAUTION:
Before performing diagnostics on airbag system, turn ignition switch "OFF", disconnect battery ground terminal and then wait at least 20 seconds.
After 20 seconds elapse, remove instrument panel lower cover, and disconnect (AB3) and (AB8), (AB9) and (AB10).

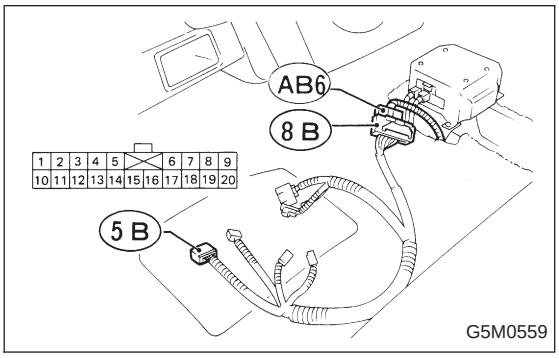

1. AIRBAG MAIN HARNESS INSPECTION

1) Disconnect connector (AB6) from airbag control module <Ref. to 5-5b [W5A0].>, and connect it to test harness B2 connector (8B).

2) Connect battery ground cable and turn ignition switch "ON" (engine off).

3) Measure voltage across each test harness B2 connector (5B) terminal and chassis ground.

CHECK : ***Connector & terminal (5B) No. 1 (+) — Chassis ground (−): Is voltage less than 1 V?***

YES : Go to next CHECK .

NO : Replace airbag main harness.

CHECK : ***Connector & terminal (5B) No. 14 (+) — Chassis ground (−): Is voltage less than 1 V?***

YES : Replace airbag control module.

NO : Replace airbag main harness.

N: AIRBAG WARNING LIGHT REMAINS ON.

DIAGNOSIS:

- Airbag warning light is faulty.
- Airbag control module to airbag warning light harness circuit is shorted or open.
- Grounding circuit is faulty.
- Airbag control module is faulty.
- (AB1) and (B31) are not connected properly.

1. Double lock inspection for connectors (AB1) and (B31)

↓

2. Inspection of body harness, connector and airbag warning light

↓

3. Grounding circuit inspection

CAUTION:
Before performing diagnostics on airbag system, turn ignition switch "OFF", disconnect battery ground cable and then wait at least 20 seconds.

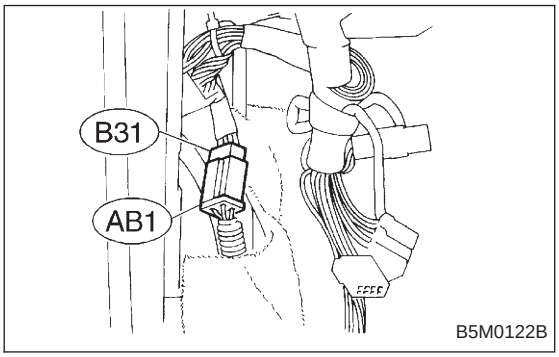

1. DOUBLE LOCK INSPECTION FOR CONNECTORS (AB1) AND (B31)

1) Remove front pillar lower trim (Driver side).
2) Check double lock of connectors (AB1) and (B31).

CHECK : ***Is there poor contact in double lock of connectors (AB1) and (B31)?***

YES : Repair poor contact in double lock of connectors (AB1) and (B31).

NO : Go to step **2**.

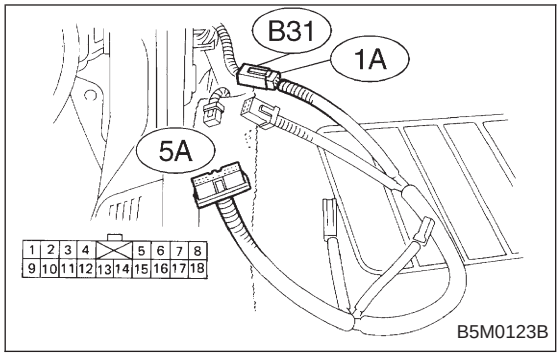

2. INSPECTION OF BODY HARNESS, CONNECTOR AND AIRBAG WARNING LIGHT

1) Turn ignition switch “OFF” and connect body harness connector (B31) to test connector A connector (1A).

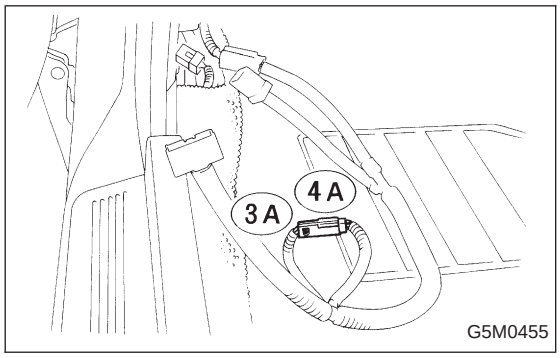

2) Connect battery ground cable and turn ignition switch “ON”, (engine off) and connect connectors (3A) and (4A).

CHECK ***: Does the airbag warning light come off?***

YES : Go to step 3).

NO : Go to next CHECK.

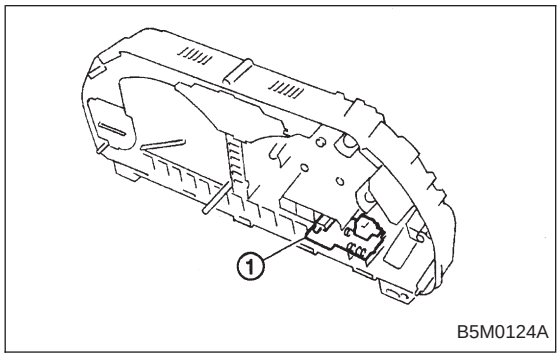

CHECK ***: Is there anything unusual to body harness?***

YES : Repair body harness.

NO : Replace airbag warning light module ①.

NOTE:
After problem has been eliminated, disconnect connectors (3A) and (4A).

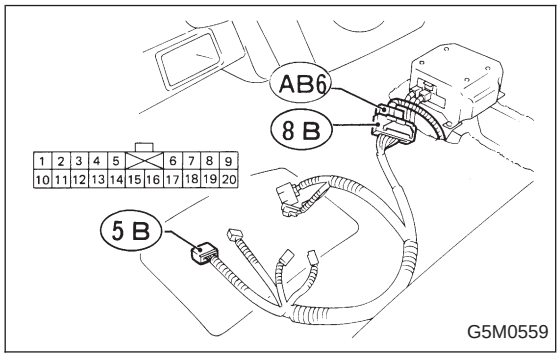

3) Turn ignition switch “OFF”, disconnect battery ground cable and then wait at least 20 seconds, and re-connect connectors (AB1) and (B31).

4) Remove instrument panel lower cover and disconnect (AB3) with (AB8), then disconnect connector (AB6) from airbag control module, <Ref. to 5-5b [W5A0].> and connect it to test harness B2 connector (8B).

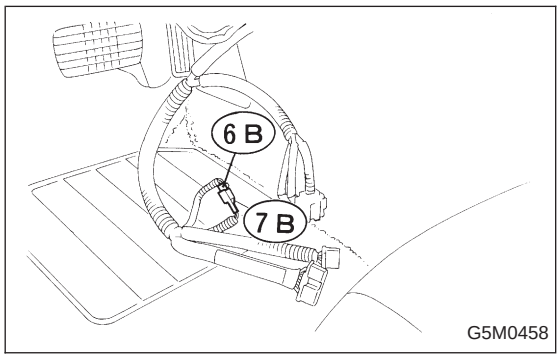

5) Connect battery ground cable and turn ignition switch “ON,” (engine off) and connect connectors (6B) and (7B).

CHECK ***: Does the airbag warning light come on?***

YES : Go to step **3**.

NO : Replace airbag main harness.

NOTE:
After problem has been eliminated, disconnect connectors (6B) and (7B).

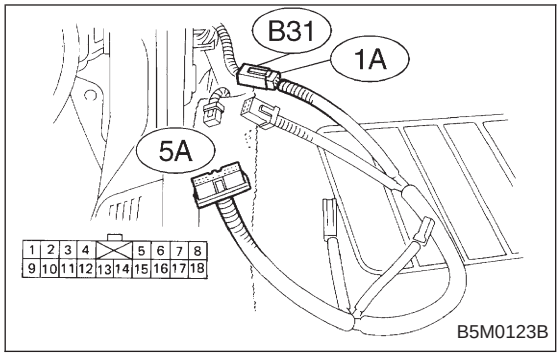

3. GROUNDING CIRCUIT INSPECTION

1) Turn ignition switch “OFF”, disconnect battery ground cable and then wait at least 20 seconds. Disconnect connector (AB1) from body harness connector (B31), and connect connector (B31) to test harness A connector (1A). Measure resistance between connector (5A) terminal and chassis ground.

CHECK : ***Connector & terminal (5A) No. 17 (+) — Chassis ground (−): Is resistance less than 10 Ω?***

YES : Go to next CHECK .

NO : Repair body grounding circuit.

CHECK : ***Connector & terminal (5A) No. 18 (+) — Chassis ground (−): Is resistance less than 10 Ω?***

YES : Go to step 2).

NO : Repair body grounding circuit.

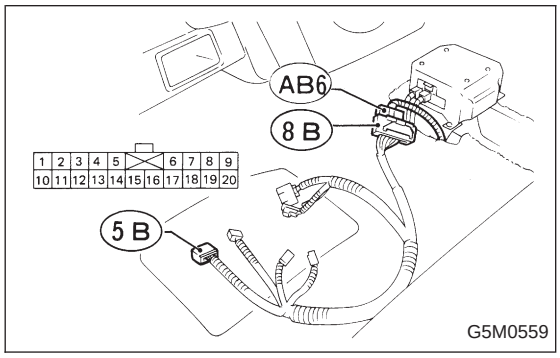

2) Connect connectors (AB1) and (B31). Disconnect connector (AB6) from airbag control module <Ref. to 5-5b [W5A0].>, and connect it to test harness B2 connector (8B).

3) Measure resistance between each test harness B2 connector (5B) terminal and chassis ground.

CHECK : ***Connector & terminal (5B) No. 11 (+) — Chassis ground (−): Is resistance less than 10 Ω?***

YES : Go to next CHECK .

NO : Replace airbag main harness.

CHECK : ***Connector & terminal (5B) No. 12 (+) — Chassis ground (−): Is resistance less than 10 Ω?***

YES : Replace airbag control module.

NO : Replace airbag main harness.

O: AIRBAG WARNING LIGHT REMAINS OFF.

DIAGNOSIS:

- Fuse No. 15 is blown.
- Body harness circuit is open.
- Airbag warning light is faulty.
- Airbag main harness is faulty.
- Airbag control module is faulty.

1. Fuse No. 15 inspection

↓

2. Body harness inspection

↓

3. Airbag warning light module (in combination meter) inspection

↓

4. Airbag main harness inspection

CAUTION:
Before performing diagnostics on airbag system, turn ignition switch "OFF", disconnect battery ground terminal, and then wait at least 20 seconds.

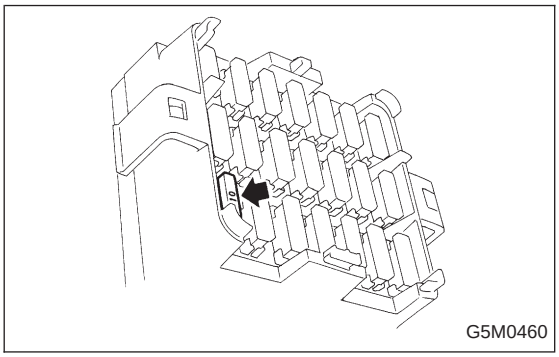

1. FUSE No. 15 INSPECTION

Remove and visually check fuse No. 15.

CHECK : ***Is fuse No. 15 blown?***

YES : Replace fuse No. 15.
If fuse No. 15 blows again, go to step **2**.

NO : Go to step **2**.

2. BODY HARNESS INSPECTION

Turn ignition switch "ON" (engine off) to make sure other warning lights (in combination meter) illuminate.

CHECK : ***Do all the warning lights (in combination meter) except airbag warning light come on?***

YES : Go to step **3**.

NO : Repair body harness.

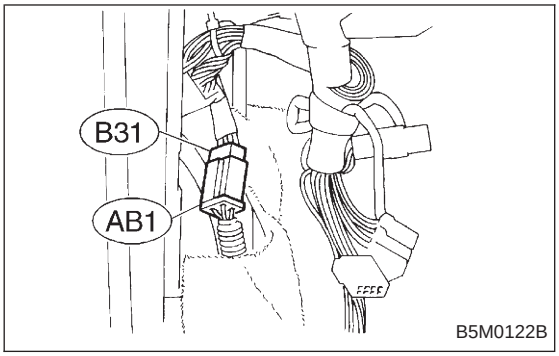

3. AIRBAG WARNING LIGHT MODULE (IN COMBINATION METER) INSPECTION

1) Turn ignition switch “OFF”, disconnect battery ground cable and then wait at least 20 seconds.
2) Disconnect body harness connector (B31) from connector (AB1).

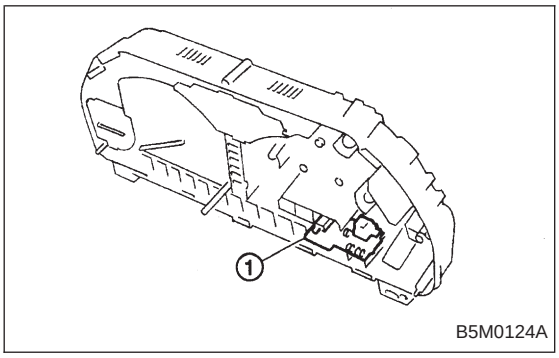

3) Connect battery ground cable and turn ignition switch “ON” (engine off) to make sure airbag warning light illuminates.

CHECK ***: Does the airbag warning light come on?***

YES : Go to step **4**.

NO : Replace airbag warning light module ①.

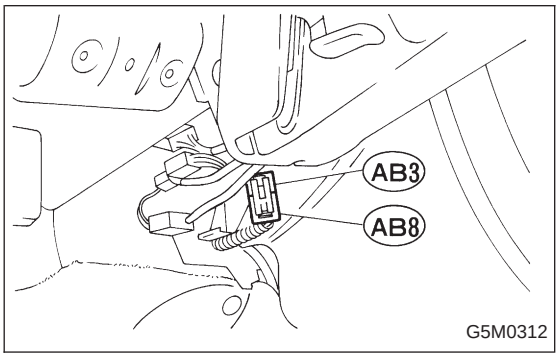

4. AIRBAG MAIN HARNESS INSPECTION

1) Turn ignition switch “OFF”, disconnect battery ground cable and then wait at least 20 seconds.
2) Connect body harness connector (B31) and connector (AB1).
3) Disconnect connectors (AB3) and (AB8) below steering column. <Ref. to 5-5 [M2-6].>

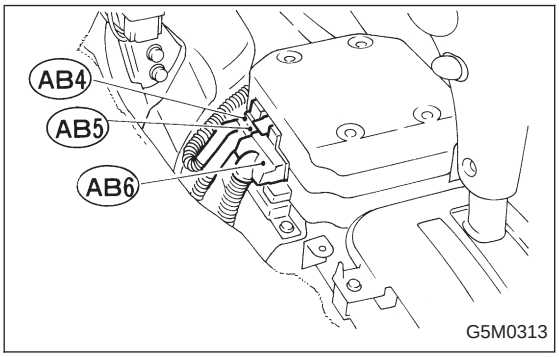

4) Disconnect connector (AB6) from airbag control module. <Ref. to 5-5b [W5A0].>

5) Connect battery ground cable and turn ignition switch “ON” to make sure airbag warning light illuminates.

CHECK ***: Does the airbag warning light come on?***

YES : Replace airbag control module.

NO : Replace airbag main harness.

P: WARNING LIGHT INDICATES TROUBLE CODE, THEN NORMAL CODE.
— FLASHING TROUBLE CODE. —

DIAGNOSIS:

- Airbag system component parts are faulty.

1. Airbag component parts appearance inspection

↓

2. Airbag component parts vibration inspection

↓

3. Showering inspection to body

CAUTION:
Before performing diagnostics on airbag system, turn ignition switch "OFF", disconnect battery ground cable, and then wait at least 20 seconds.

1. AIRBAG COMPONENT PARTS APPEARANCE INSPECTION

1) Conduct on-board diagnostic and call up trouble codes stored in memory. <Ref. to 5-5b [T4B0].>

2) Select trouble code required to check airbag component parts from those listed in table and reproduce symptom.

Trouble codes	Check parts	Refer to 5-5b:
04	● Airbag module (Passenger) ● Airbag main harness ● Airbag control module	W3A2 W4A0 W5A0
11	● Fuse No. 8 ● Airbag main harness ● Airbag control module ● Body harness	T5D3 W4A0 W5A0 —
12	● Roll connector ● Airbag module (Driver) ● Airbag main harness ● Airbag control module	W6A0 W3A1 W4A0 W5A0
13	● Airbag module (Driver) ● Roll connector ● Airbag main harness ● Airbag control module	W3A1 W6A0 W4A0 W5A0
21	● Airbag control module	W5A0
22	● Airbag module (Passenger) ● Airbag main harness ● Airbag control module	W3A2 W4A0 W5A0
33	● Airbag control module	W5A0
34	● Airbag main harness ● Airbag module (Passenger) ● Airbag control module	W4A0 W3A2 W5A0
41	● Airbag module (Driver) ● Roll connector ● Airbag main harness ● Airbag control module	W3A1 W6A0 W4A0 W5A0
42	● Airbag module (Passenger) ● Airbag main harness ● Airbag control module	W3A2 W4A0 W5A0
43	● Airbag module (Driver) ● Roll connector ● Airbag main harness ● Airbag control module	W3A1 W6A0 W4A0 W5A0

3) Conduct appearance inspection on parts selected.

CHECK : ***Is there anything unusual about the appearance of airbag component parts?***

YES : Replace faulty airbag component parts.

NO : Go to step **2**.

NOTE:
Also check connector terminals, wiring harness, case, etc. for damage.

2. AIRBAG COMPONENT PARTS VIBRATION INSPECTION

1) Gently shake check parts (to determine faults.).
2) To check airbag module or roll connector, turn and tilt steering wheel.

CAUTION:
Do not shake or vibrate airbag control module.

CHECK : ***Does the component malfunction again when shaking?***

YES : Replace faulty airbag component parts.

NO : Go to step **3**.

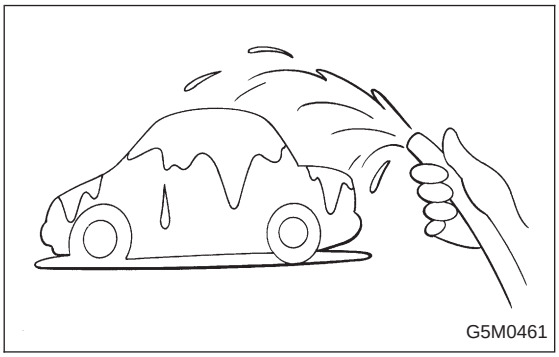

3. SHOWERING INSPECTION TO BODY

Spray water on vehicle body.

CAUTION:
Do not directly spray water on airbag components.

CHECK : ***Does water leak into the passenger compartment when showering vehicle?***

YES : Replace faulty airbag component parts.

NO : Clear memory.

NOTE:
Also check wiring harnesses as water may leak along them and get airbag component parts wet.

Q: WARNING LIGHT INDICATES TROUBLE CODE, THEN NORMAL CODE. — FLASHING NORMAL CODE. —

DIAGNOSIS:

- Airbag connector is faulty.
- Fuse No. 16 is blown.
- Airbag main harness is faulty.
- Airbag control module is faulty.
- Body harness is faulty.

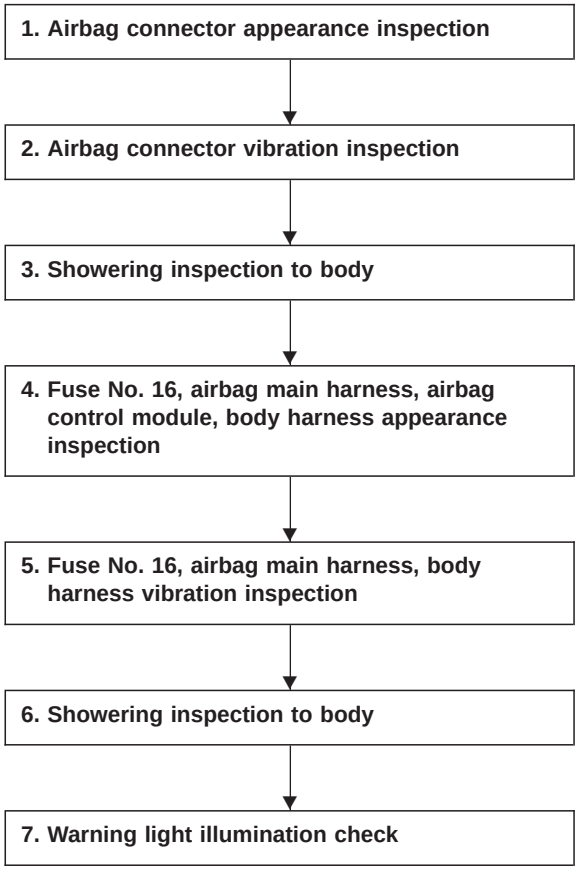

CAUTION:
Before performing diagnostics on airbag system, turn ignition switch "OFF", disconnect battery ground cable, and then wait at least 20 seconds.

1. AIRBAG CONNECTOR APPEARANCE INSPECTION

Conduct appearance inspection on airbag connectors (AB2) through (AB8). <Ref. to 5-5b [T100].>

CHECK : ***Is there anything unusual about the appearance of connectors (AB2) through (AB8)?***

YES : Replace faulty airbag component parts.

NO : Go to step **2**.

NOTE:
Check terminals, case and wiring harnesses for damage.

2. AIRBAG CONNECTOR VIBRATION INSPECTION

Conduct vibration inspection on airbag connectors (AB2) through (AB8). <Ref. to 5-5b [T100].>

CHECK : ***Do the connectors (AB2) through (AB8) malfunction again when shaking?***

YES : Replace faulty airbag component parts.

NO : Go to step **3**.

NOTE:
Gently shake each airbag connector.

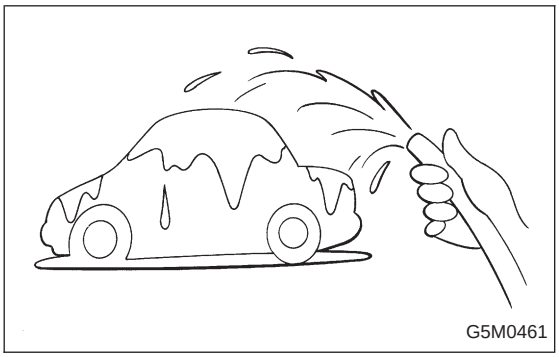

3. SHOWERING INSPECTION TO BODY

Spray water on vehicle body.

CAUTION:
Do not directly spray water on airbag components.

CHECK : ***Does water leak into the passenger compartment when showering vehicle?***

YES : Replace faulty airbag component parts.

NO : Go to step **4**.

NOTE:
If leaks are noted, also check wiring harnesses as water may leak along them and wet airbag connectors.

4. FUSE No. 16, AIRBAG MAIN HARNESS, AIRBAG CONTROL MODULE, BODY HARNESS APPEARANCE INSPECTION

Conduct appearance inspection on fuse No. 16 <Ref. to 5-5b [T5H3].>, airbag main harness <Ref. to 5-5b [W4A0].>, airbag control module <Ref. to 5-5b [W5A0].> and body harness.

CHECK : ***Is there anything unusual about the appearance of fuse No. 16, airbag main harness, airbag control module or body harness?***

YES : Replace faulty airbag component parts.

NO : Go to step **5**.

NOTE:
Also check connectors, terminals, wiring harness and case for damage.

5. FUSE No. 16, AIRBAG MAIN HARNESS, BODY HARNESS VIBRATION INSPECTION

Conduct vibration inspection on fuse No. 16, airbag main harness and body harness.

CAUTION:
Do not shake or vibrate airbag control module.

CHECK : ***Do fuse No. 16, airbag main harness or body harness malfunction again when shaking?***

YES : Replace faulty airbag component parts.

NO : Go to step **6**.

NOTE:
Gently shake each part.

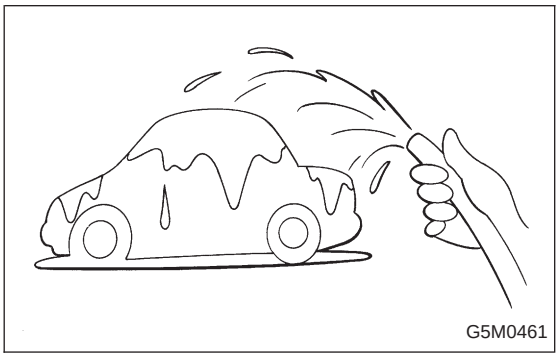
G5M0461

6. SHOWERING INSPECTION TO BODY

Spray water on vehicle body.

CAUTION:
Do not directly spray water on each part.

CHECK : ***Does water leak into the passenger compartment when showering vehicle?***

YES : Replace faulty airbag component parts.

NO : Go to step **7**.

NOTE:
If leaks are noted, check wiring harnesses as water may leak along them and get parts wet.

7. WARNING LIGHT ILLUMINATION CHECK

Turn ignition switch “ON” (engine off) and observe airbag warning light.

CHECK : ***Does the airbag warning light comes on for about 7 seconds, then go out and stay out?***

YES : Clear memory.

NO : Go to “DIAGNOSTICS PROCEDURE”.
<Ref. to 5-5b [T4E0].>