2. Schematic

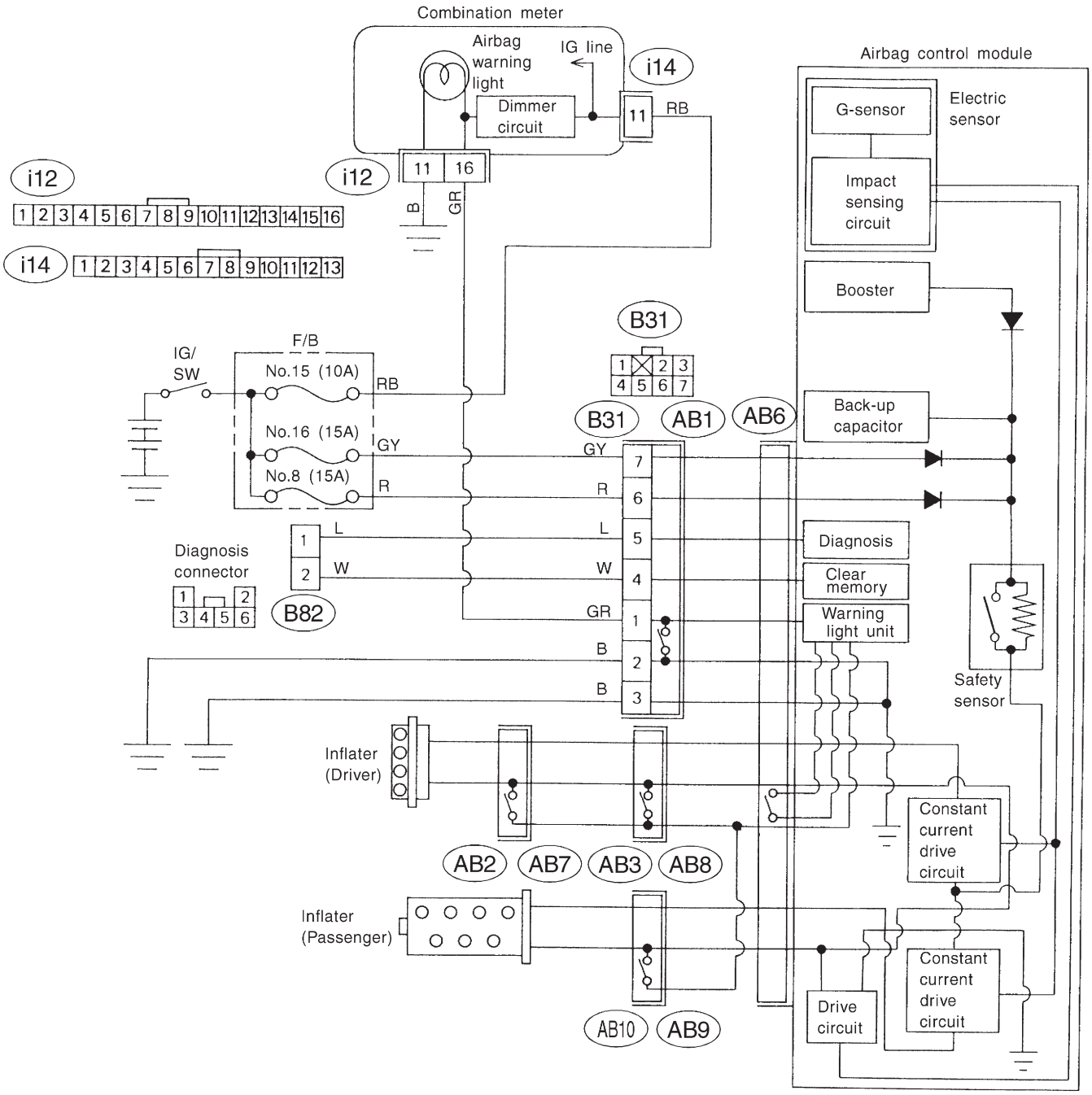

B5M0464A