3. Tools for Diagnostics

CAUTION:
Be sure to use specified test harness A, B or C when measuring voltage, resistance, etc. of AIRBAG system component parts.

A: TEST HARNESS A

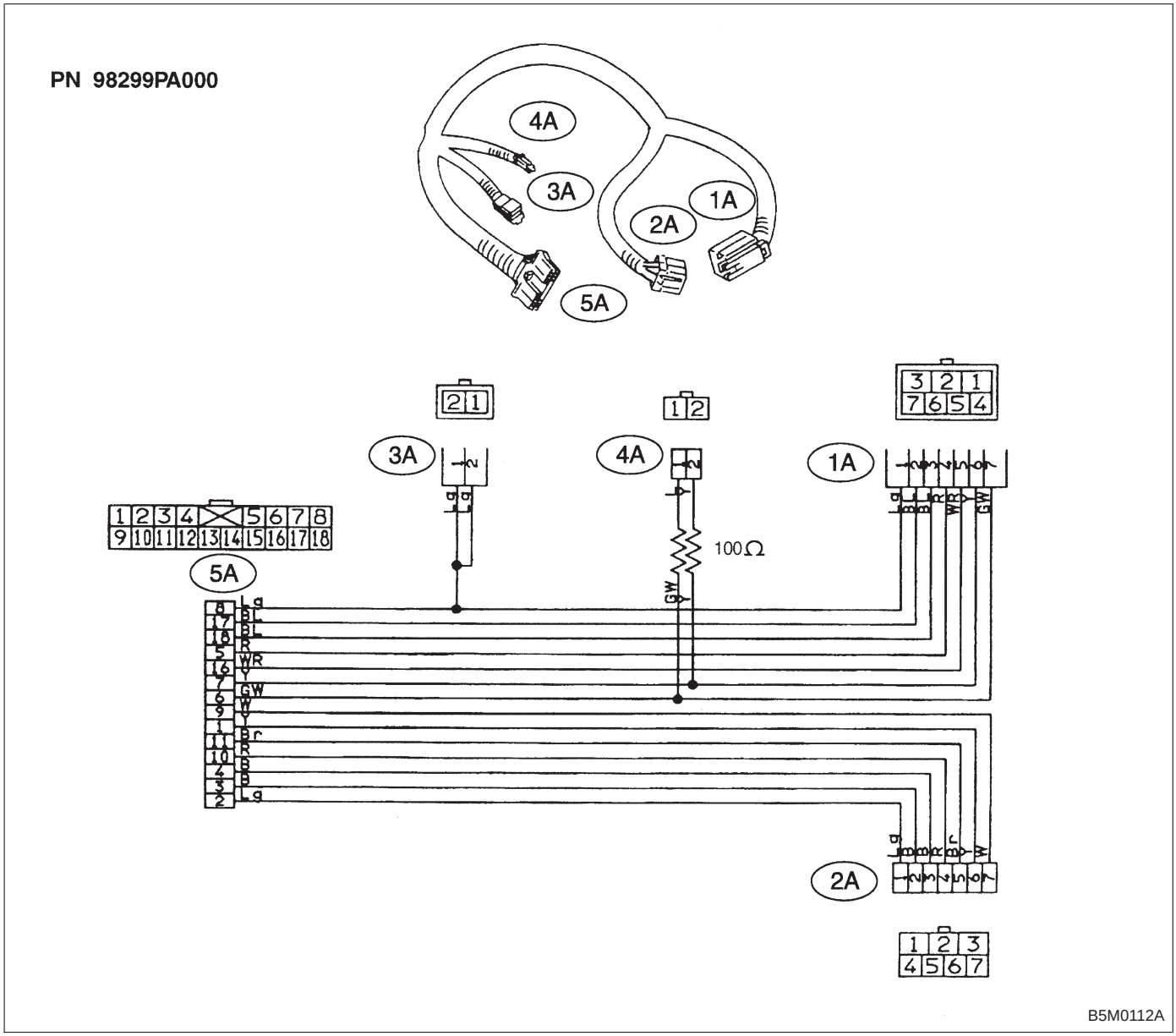

B: TEST HARNESS B2

PN 98299PA011

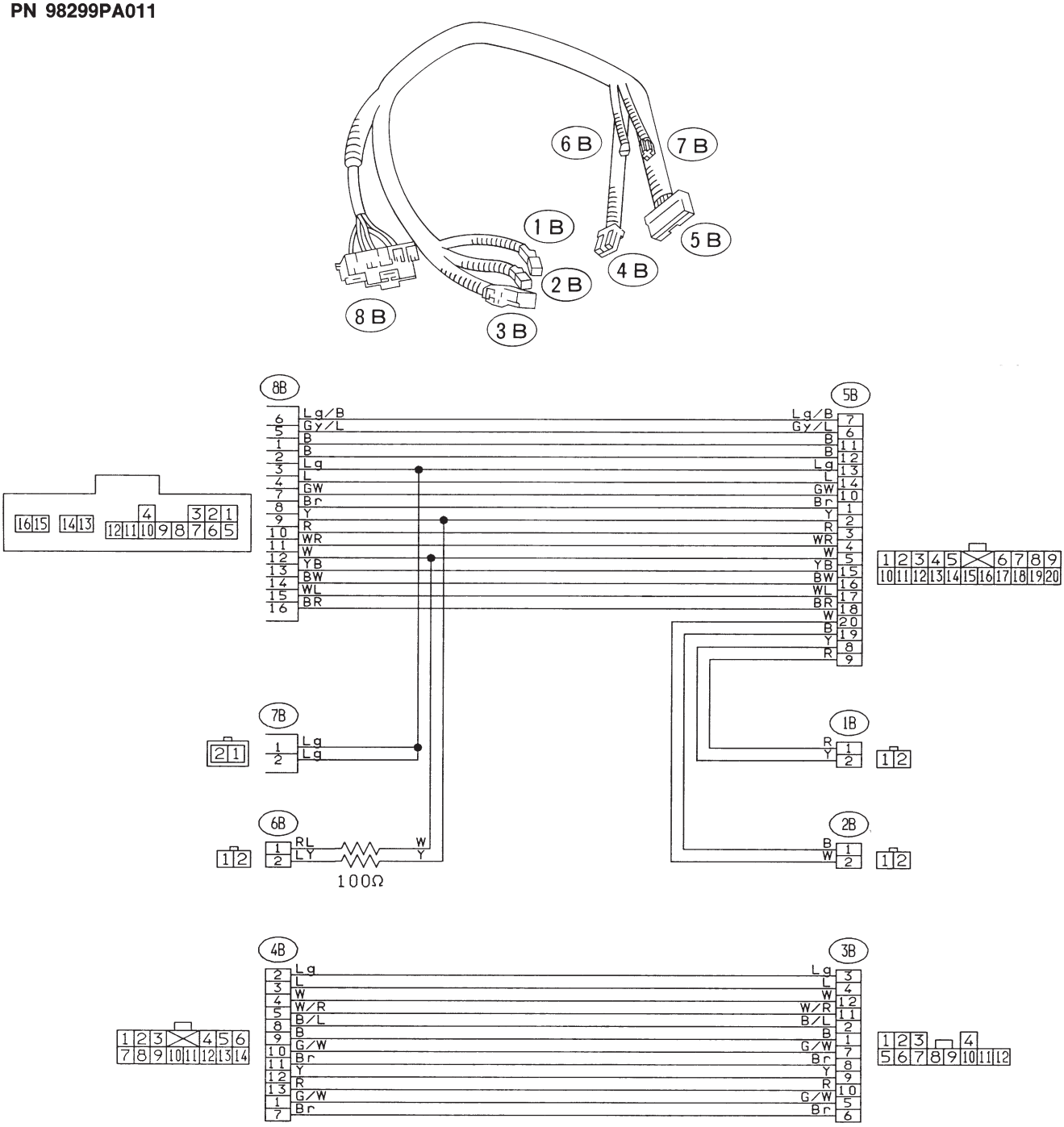

G5M0593

C: TEST HARNESS C

PN 98299PA020

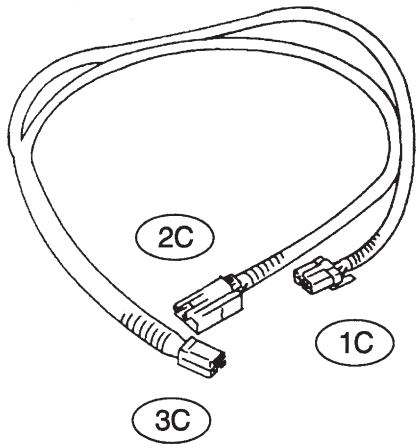

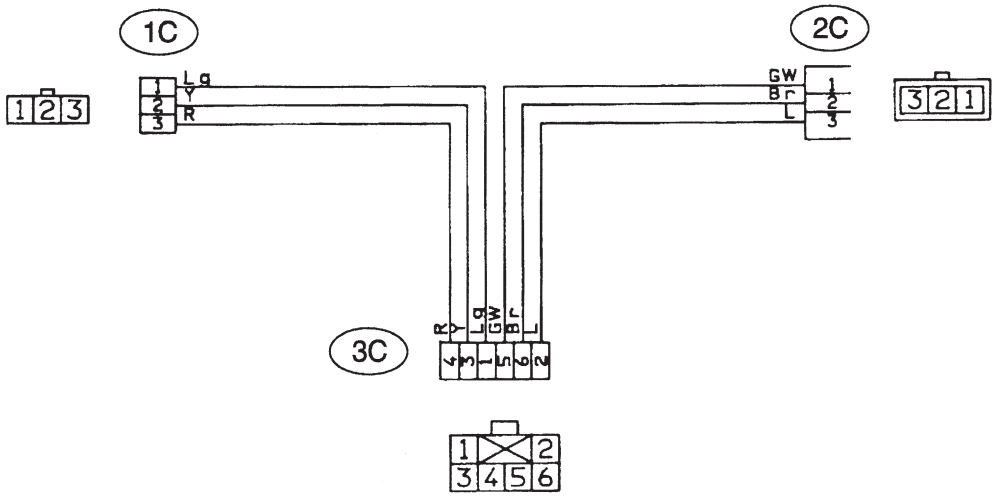

B5M0113A

D: AIRBAG RESISTOR
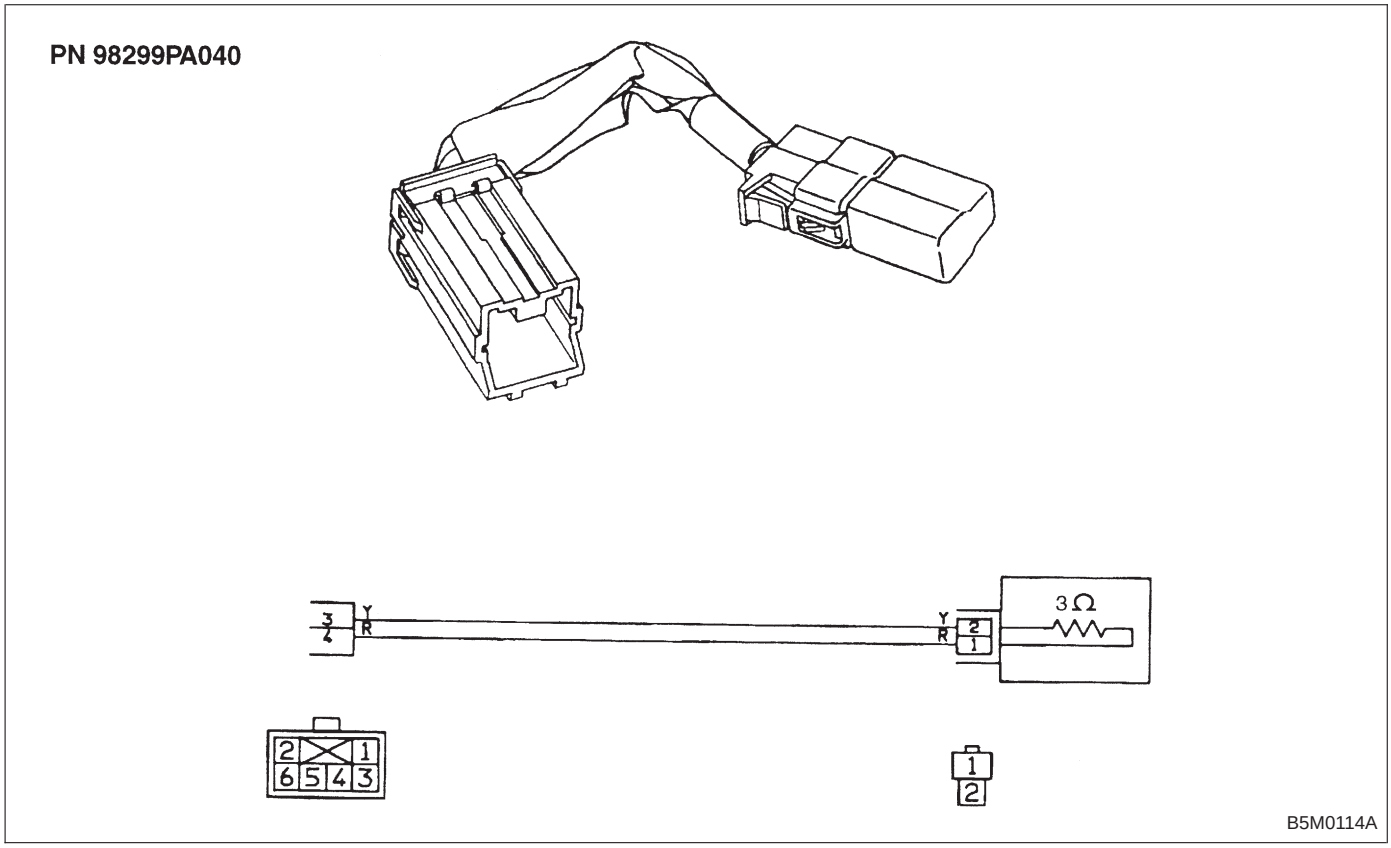
The airbag resistor is used during diagnostics. The airbag resistor has the same resistance as the airbag module and thus provides safety when used instead of the airbag module. It also makes it possible to finish, diagnostics in less time.