3. Combination Meter

A: DIAGNOSTICS PROCEDURE

If speedometer does not operate, or operates abnormally, check combination meter circuit (shown in flow chart as described below).

CAUTION:
Make sure that trouble code of vehicle speed sensor 2 system appears in electrical system on-board diagnosis.

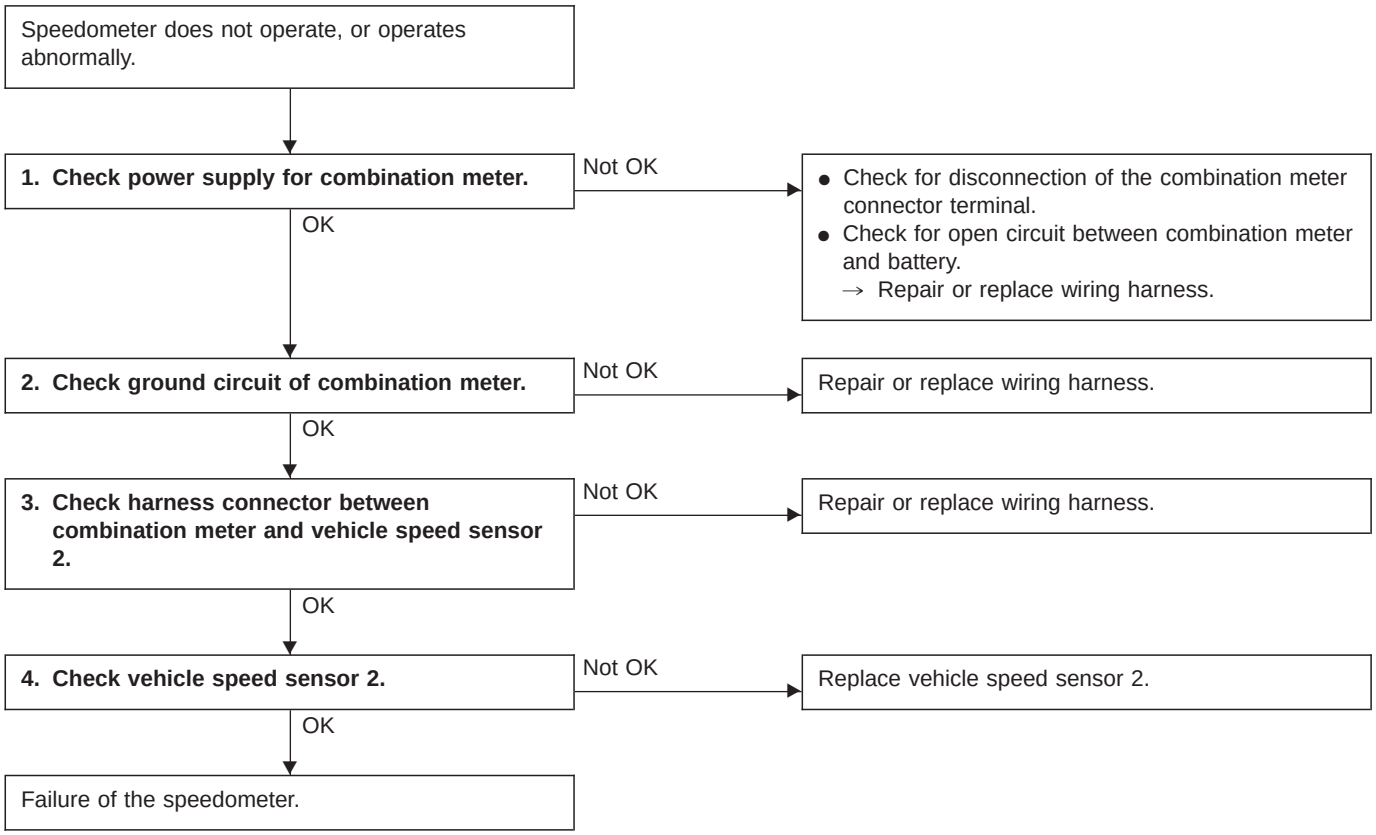

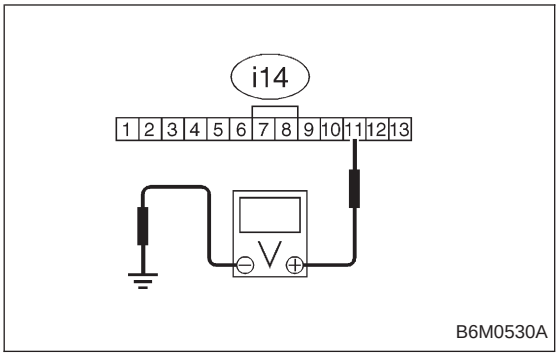

1. CHECK POWER SUPPLY FOR COMBINATION METER.

1) Remove combination meter.
2) Turn ignition switch to ON.
3) Measure voltage at combination meter connector terminal.

Connector & terminal / Specified voltage:
(i14) No. 11 — Body / 10 V, or more

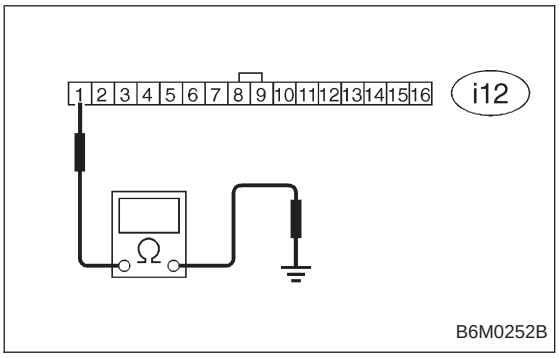

2. CHECK GROUND CIRCUIT OF COMBINATION METER.

1) Turn ignition switch to OFF.
2) Measure resistance of harness connector between combination meter and body.

Connector & terminal / Specified voltage:
(i12) No. 1 — Body / 10 Ω, max.

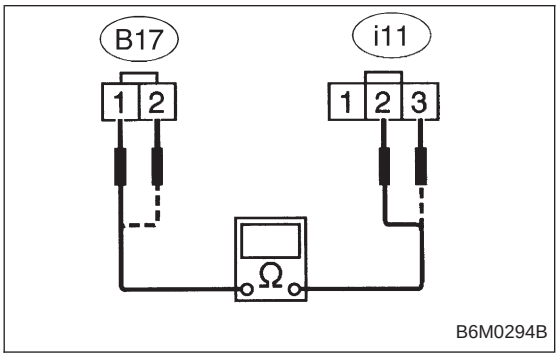

3. CHECK HARNESS CONNECTOR BETWEEN COMBINATION METER AND VEHICLE SPEED SENSOR 2.

1) Disconnect connector from vehicle speed sensor 2.
2) Measure resistance of harness connector between vehicle speed sensor 2 and combination meter.

Connector & terminal / Specified resistance:
(B17) No. 1 — (i11) No. 2 / 10 Ω, max.
(B17) No. 2 — (i11) No. 3 / 10 Ω, max.

4. CHECK VEHICLE SPEED SENSOR 2.

NOTE:
- If resistance between terminals of vehicle speed sensor 2 is out of specification, the sensor may have a failure.
- If resistance is OK and voltage between terminals of vehicle speed sensor 2 is out of specification, mechanical trouble may be present between vehicle speed sensor 2 and speedometer shaft in transmission.

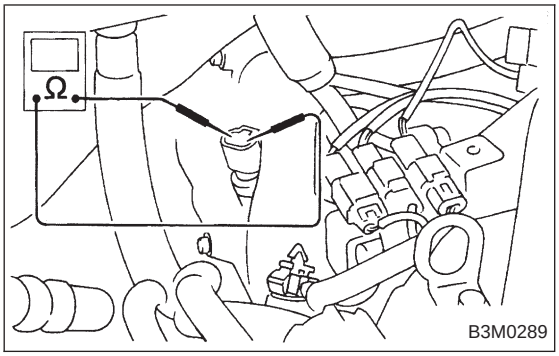

1) Disconnect connector from vehicle speed sensor 2.
2) Measure resistance between terminals of vehicle speed sensor 2.

Terminals / Specified resistance:
No. 1 — No. 2 / 350 — 450 Ω

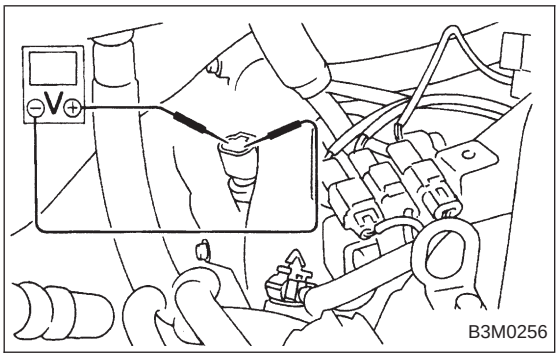

WARNING:
Be careful not to be caught up by the running wheels.

3) Set the vehicle on free roller, or lift-up the vehicle and support with safety stands.
4) Drive the vehicle at speed greater than 20 km/h (12 MPH).
5) Measure voltage between terminals of vehicle speed sensor 2.

Terminals / Specified voltage:
No. 1 — No. 2 / 5 V, min. (AC range)

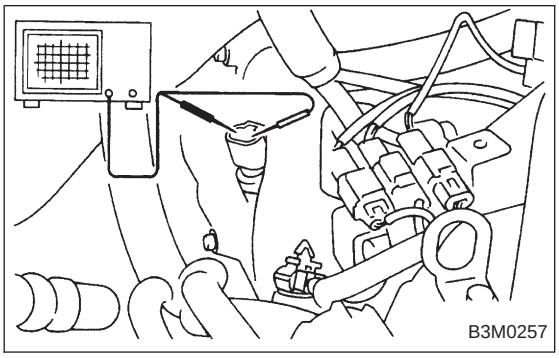

- Using an oscilloscope:
  (1) Turn ignition switch to OFF.
  (2) Set oscilloscope to vehicle speed sensor 2.
  (3) Drive the vehicle at speed greater than 20 km/h (12 MPH).
  (4) Measure signal voltage.
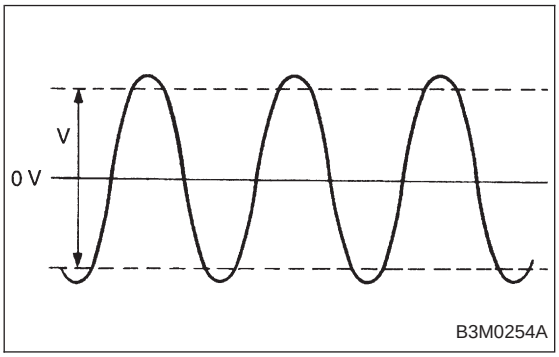
Specified voltage (V): 5 V, min.