4. Power Window

A: DIAGNOSTICS PROCEDURE-1

Trouble symptom A: All door windows do not operate.

1. Check fuse and power supply.	Not OK →	● Replace fuse or circuit breaker. ● Repair or replace wiring harness.
↓ OK		
2. Check power window relay.	Not OK →	Replace power window relay.
↓ OK		
3. Check ground circuit of power window relay.	Not OK →	Repair or replace wiring harness.
↓ OK		
4. Check harness connector between power window relay and power window main switch (driver's door switch).	Not OK →	Repair or replace wiring harness.
↓ OK		
5. Check power window main switch.	Not OK →	Replace power window main switch.
↓ OK		
6. Check ground circuit of power window main switch.	Not OK →	Repair or replace wiring harness.
↓ OK		
System is OK.		

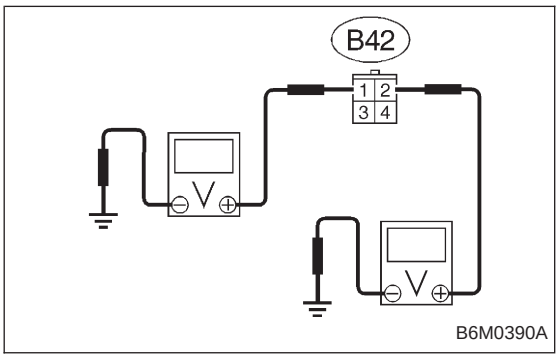

1. CHECK FUSE AND POWER SUPPLY.

1) Check fuse No. 15.
2) Disconnect connector of power window relay.
3) Turn ignition switch to ON.
4) Measure voltage between power window relay connector and body.

Connector & terminal / Specified voltage:
(B42) No. 1 — Body / 10 V, or more
(B42) No. 2 — Body / 10 V, or more

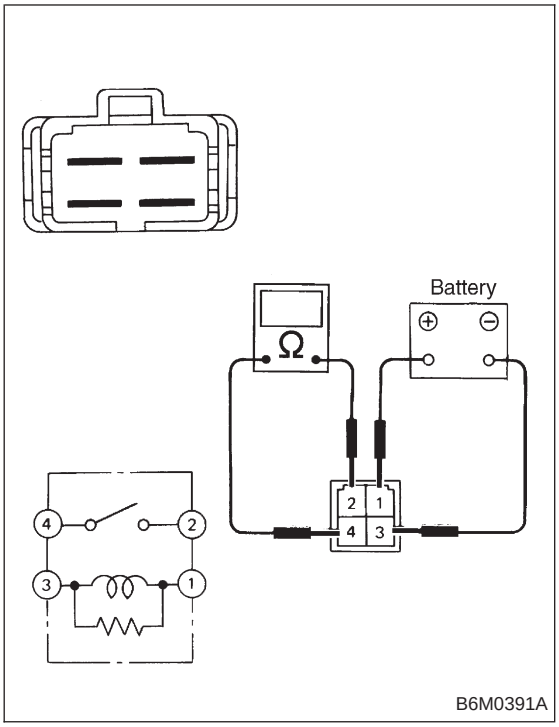

2. CHECK POWER WINDOW RELAY.

1) Disconnect connector of power window relay.
2) Connect battery to terminal No. 1 and ground terminal No. 3.
3) Check continuity between terminals as indicated in table below:

When current flows.	Between terminals No. 2 and No. 4	Continuity exists.
When current does not flow.	Between terminals No. 2 and No. 4	Continuity does not exist.
	Between terminals No. 1 and No. 3	Continuity exists.

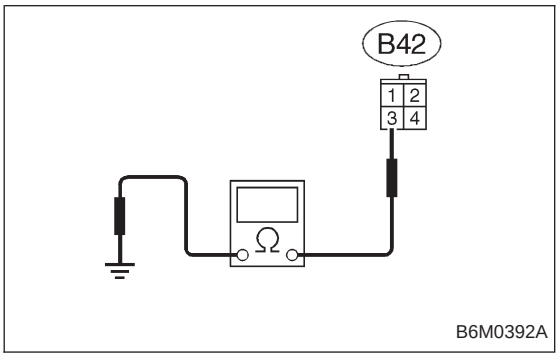

3. CHECK GROUND CIRCUIT OF POWER WINDOW RELAY.

1) Disconnect connector of power window relay.
2) Measure resistance of harness connector between power window relay and body.

Connector & terminal / Specified resistance:
(B42) No. 3 — Body / 10 Ω, max.

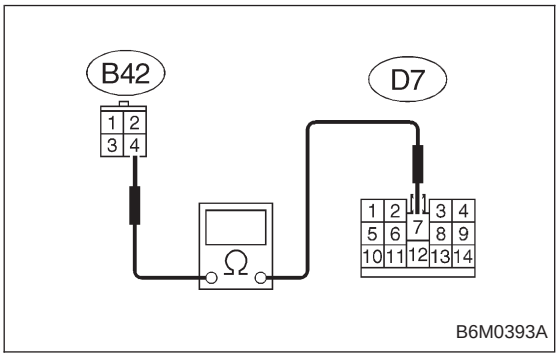

4. CHECK HARNESS CONNECTOR BETWEEN POWER WINDOW RELAY AND POWER WINDOW MAIN SWITCH (DRIVER'S DOOR SWITCH).

1) Disconnect connectors of power window relay and power window main switch.
2) Measure resistance of harness connector between power window relay and power window main switch.

Connector & terminal / Specified resistance:
(B42) No. 4 — (D7) No. 7 / 10 Ω, max.

5. CHECK POWER WINDOW MAIN SWITCH.

Refer to 6-2 [W16B1] for inspection of power window main switch.

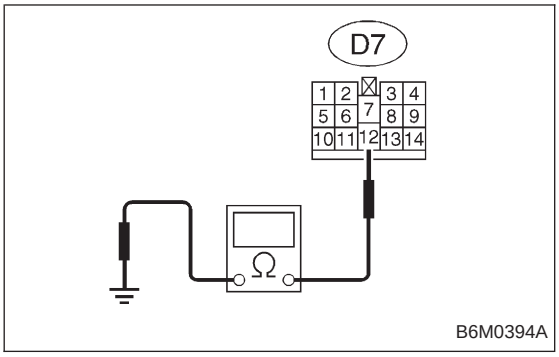

6. CHECK GROUND CIRCUIT OF POWER WINDOW MAIN SWITCH.

1) Disconnect connector of power window main switch.
2) Measure resistance of harness connector between power window main switch and body.

Connector & terminal / Specified resistance:
(D7) No. 12 — Body / 10 Ω, max.

B: DIAGNOSTICS PROCEDURE-2

Trouble symptom B: Only driver's door window does not operate.

1. Check power supply for power window main switch.
- Not OK → Go to diagnostics procedure of trouble symptom A. <Ref. to 6-2 [K4A0].>
- OK ↓

2. Check power window main switch (driver's door switch).
- Not OK → Replace power window main switch.
- OK ↓

3. Check ground circuit of power window main switch.
- Not OK → Repair or replace wiring harness.
- OK ↓

4. Check driver's door window motor.
- Not OK → Replace power window motor.
- OK ↓

5. Check harness connector between power window main switch and driver's door window motor.
- Not OK → Repair or replace wiring harness.
- OK ↓

- System circuit is OK.
- Mechanical trouble may be caused in door window system such as break of window regulator.

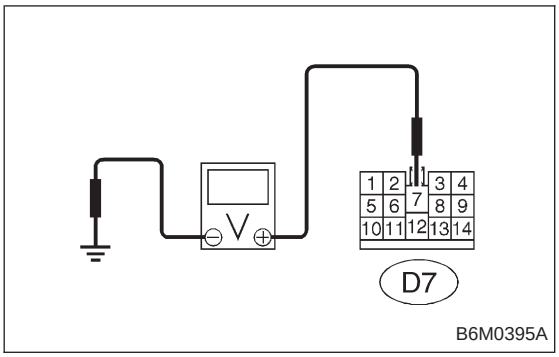

1. CHECK POWER SUPPLY FOR POWER WINDOW MAIN SWITCH.

1) Disconnect connector of power window main switch.
2) Turn ignition switch to ON.
3) Measure voltage between power window main switch connector and body.

Connector & terminal / Specified voltage:
(D7) No. 7 — Body / 10 V, or more

2. CHECK POWER WINDOW MAIN SWITCH (DRIVER'S DOOR SWITCH).

Refer to 6-2 [W16B1] for inspection of power window main switch.

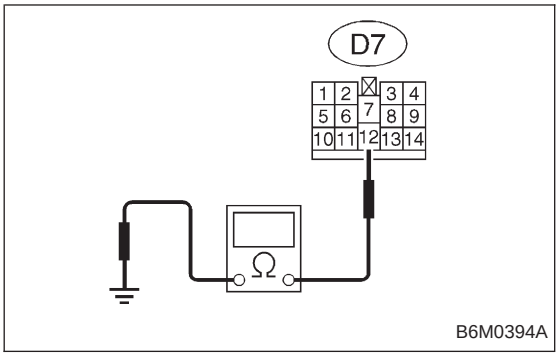

3. CHECK GROUND CIRCUIT OF POWER WINDOW MAIN SWITCH.

1) Disconnect connector of power window main switch.
2) Measure resistance of harness connector between power window main switch and body.

Connector & terminal / Specified resistance:
(D7) No. 12 — Body / 10 Ω, max.

4. CHECK DRIVER'S DOOR WINDOW MOTOR.

1) Disconnect connector of power window motor (driver's door).
2) Make sure that power window motor rotates properly when battery voltage is applied to terminals of motor connector.
3) Change polarity of battery connections to terminals to ensure that motor rotates in reverse direction.

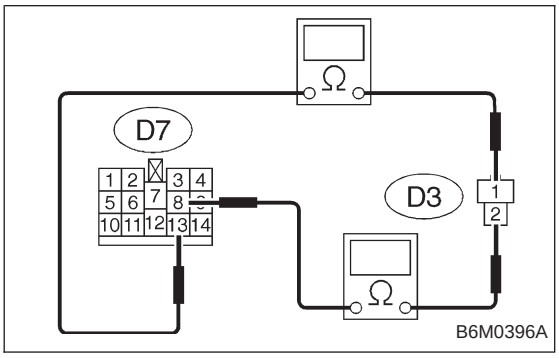

5. CHECK HARNESS CONNECTOR BETWEEN POWER WINDOW MAIN SWITCH AND DRIVER'S DOOR WINDOW MOTOR.

1) Disconnect connectors of power window main switch and power window motor (driver's door).
2) Measure resistance of harness connector between power window main switch and power window motor.

Connector & terminal / Specified resistance:
LHD model:
(D7) No. 8 — (D3) No. 2 / 10 Ω, max.
(D7) No. 13 — (D3) No. 1 / 10 Ω, max.
RHD model:
(D7) No. 6 — (D3) No. 2 / 10 Ω, max.
(D7) No. 11 — (D3) No. 1 / 10 Ω, max.

C: DIAGNOSTICS PROCEDURE-3

Trouble symptom C: One or more of passenger's door window do not operate.

1. Check power supply for power window sub switch which is out of order.
- Not OK → Repair or replace wiring harness.
- OK ↓

2. Check power window sub switch which is out of order.
- Not OK → Replace power window sub switch.
- OK ↓

3. Check power window motor which is out of order.
- Not OK → Replace power window motor.
- OK ↓

4. Check harness connector between power window sub switch and power window motor.
- Not OK → Repair or replace wiring harness.
- OK ↓

5. Check harness connector between power window sub switch and main switch.
- Not OK → Repair or replace wiring harness.
- OK ↓

6. Check power window main switch.
- Not OK → Replace power window main switch.
- OK ↓

7. Check ground circuit of power window main switch.
- Not OK → Repair or replace wiring harness.
- OK ↓

- System circuit is OK.
- Mechanical trouble may be caused in door window system such as break of window regulator.

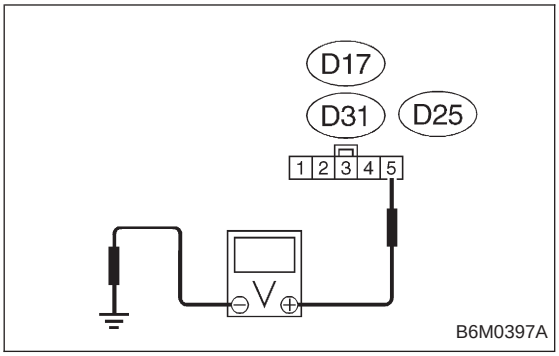

1. CHECK POWER SUPPLY FOR POWER WINDOW SUB SWITCH WHICH IS OUT OF ORDER.

1) Disconnect connector of power window sub switch.
2) Turn ignition switch to ON.
3) Measure voltage between power window sub switch connector and body.

Connector & terminal / Specified voltage:
(D17) No. 5 — Body / 10 V, or more (Front passenger)
(D31) No. 5 — Body / 10 V, or more (Rear RH)
(D25) No. 5 — Body / 10 V, or more (Rear LH)

2. CHECK POWER WINDOW SUB SWITCH WHICH IS OUT OF ORDER.

Refer to 6-2 [W16B2] for inspection of power window sub switch.

3. CHECK POWER WINDOW MOTOR WHICH IS OUT OF ORDER.

1) Disconnect connector of power window motor.
2) Make sure that power window motor rotates properly when battery voltage is applied to terminals of motor connector.
3) Change polarity of battery connections to terminals to ensure that motor rotates in reverse direction.

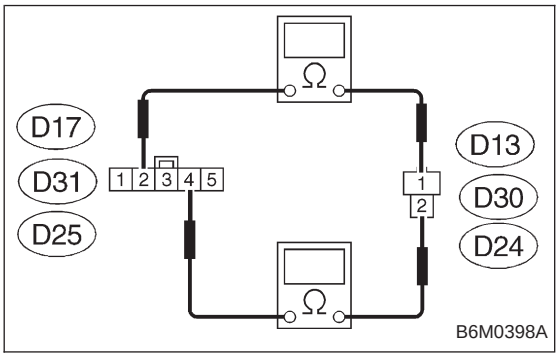

4. CHECK HARNESS CONNECTOR BETWEEN POWER WINDOW SUB SWITCH AND POWER WINDOW MOTOR.

1) Disconnect connectors of power window sub switch and power window motor.
2) Measure resistance of harness connector between power window sub switch and power window motor.

Connector & terminal / Specified resistance:
(D17) No. 2 — (D13) No. 1 / 10 Ω, max. (Front passenger)
(D17) No. 4 — (D13) No. 2 / 10 Ω, max. (Front passenger)
(D31) No. 2 — (D30) No. 1 / 10 Ω, max. (Rear RH)
(D31) No. 4 — (D30) No. 2 / 10 Ω, max. (Rear RH)
(D25) No. 2 — (D24) No. 1 / 10 Ω, max. (Rear LH)
(D25) No. 4 — (D24) No. 2 / 10 Ω, max. (Rear LH)

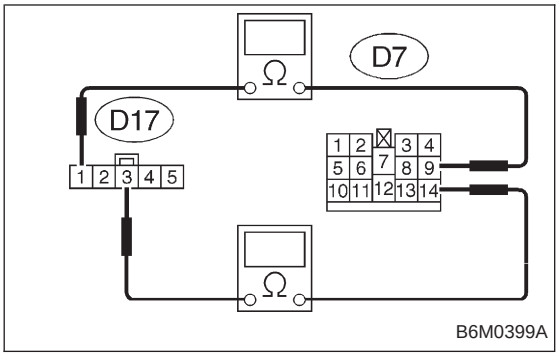

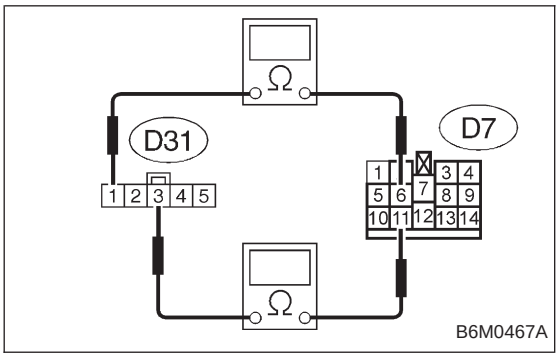

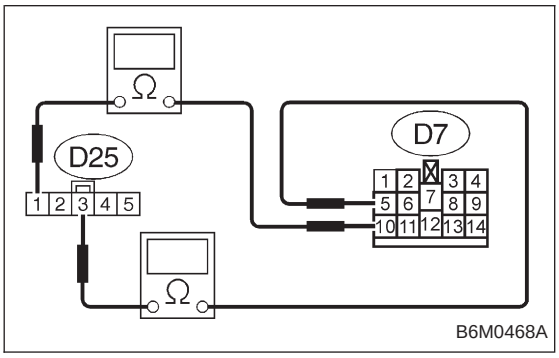

5. CHECK HARNESS CONNECTOR BETWEEN POWER WINDOW SUB SWITCH AND MAIN SWITCH.

1) Disconnect connectors of power window sub switch and main switch.
2) Measure resistance of harness connector between power window sub switch and main switch.

Connector & terminal / Specified resistance:

LHD model:

(D17) No. 1 — (D7) No. 9 / 10 Ω, max. (Front passenger)
(D17) No. 3 — (D7) No. 14 / 10 Ω, max. (Front passenger)
(D31) No. 1 — (D7) No. 6 / 10 Ω, max. (Rear RH)
(D31) No. 3 — (D7) No. 11 / 10 Ω, max. (Rear RH)
(D25) No. 1 — (D7) No. 10 / 10 Ω, max. (Rear LH)
(D25) No. 3 — (D7) No. 5 / 10 Ω, max. (Rear LH)

RHD model:

(D17) No. 1 — (D7) No. 10 / 10 Ω, max. (Front passenger)
(D17) No. 3 — (D7) No. 5 / 10 Ω, max. (Front passenger)
(D31) No. 1 — (D7) No. 9 / 10 Ω, max. (Rear RH)
(D31) No. 3 — (D7) No. 14 / 10 Ω, max. (Rear RH)
(D25) No. 1 — (D7) No. 13 / 10 Ω, max. (Rear LH)
(D25) No. 3 — (D7) No. 8 / 10 Ω, max. (Rear LH)

6. CHECK POWER WINDOW MAIN SWITCH.

Refer to 6-2 [W16B1] for inspection of power window main switch.

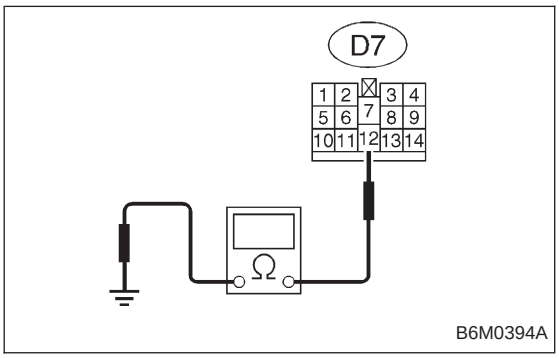

7. CHECK GROUND CIRCUIT OF POWER WINDOW MAIN SWITCH.

1) Disconnect connector of power window main switch.
2) Measure resistance of harness connector between power window main switch and body.

Connector & terminal / Specified resistance:

(D7) No. 12 — Body / 10 Ω, max.