5. Remote Controlled Rearview Mirror

A: DIAGNOSTICS PROCEDURE

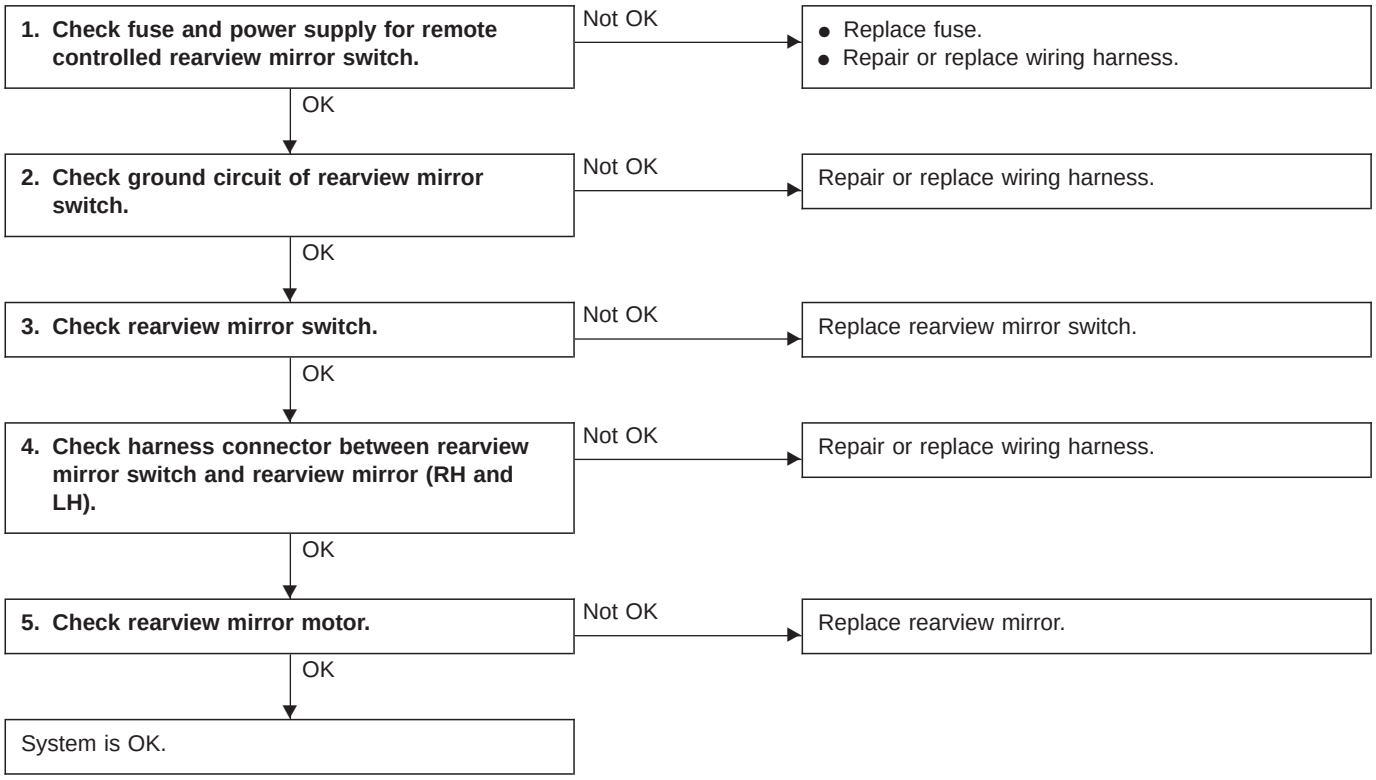

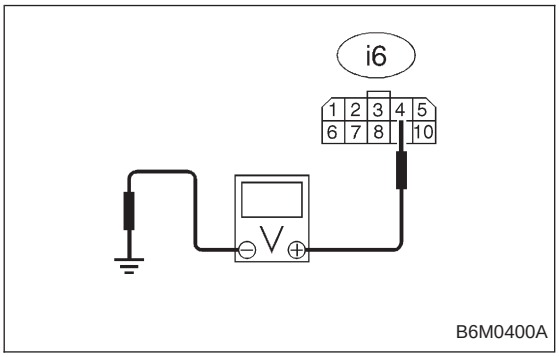

1. CHECK FUSE AND POWER SUPPLY FOR REMOTE CONTROLLED REARVIEW MIRROR SWITCH.

1) Check fuse No. 3.
2) Disconnect connector of rearview mirror switch.
3) Turn ignition switch to ON.
4) Measure voltage between rearview mirror switch connector and body.

Connector & terminal / Specified voltage:
(i6) No. 4 — Body / 10 V, or more

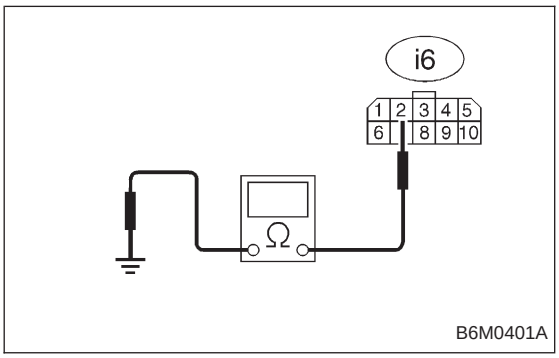

2. CHECK GROUND CIRCUIT OF REARVIEW MIRROR SWITCH.

1) Disconnect connector of rearview mirror switch.
2) Measure resistance of harness connector between rearview mirror switch and body.

Connector & terminal / Specified resistance:
(i6) No. 2 — Body / 10 Ω, max.

3. CHECK REARVIEW MIRROR SWITCH.

Refer to 6-2 [W18B1] for inspection of rearview mirror switch.

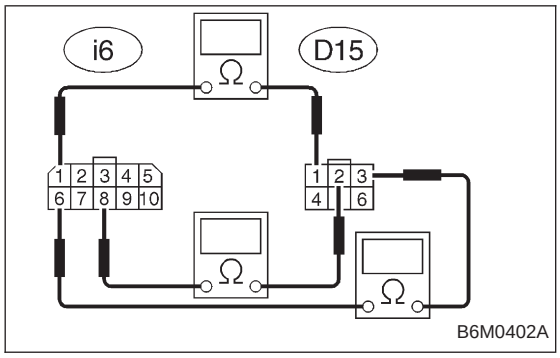

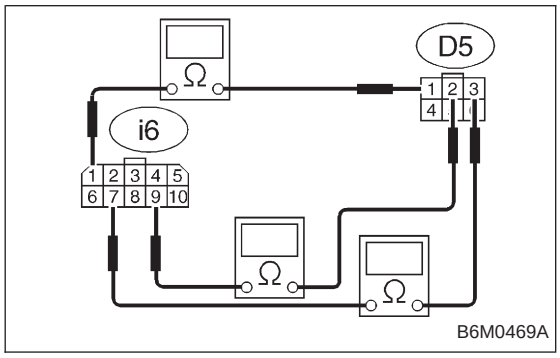

4. CHECK HARNESS CONNECTOR BETWEEN REARVIEW MIRROR SWITCH AND REARVIEW MIRROR (RH AND LH).

1) Disconnect connectors of rearview mirror switch and rearview mirror.
2) Measure resistance of harness connector between rearview mirror switch and rearview mirror.

Connector & terminal / Specified resistance:

LHD model:

(i6) No. 1 — (D15) No. 1 / 10 Ω, max. (RH)
(i6) No. 8 — (D15) No. 2 / 10 Ω, max. (RH)
(i6) No. 6 — (D15) No. 3 / 10 Ω, max. (RH)
(i6) No. 1 — (D 5) No. 1 / 10 Ω, max. (LH)
(i6) No. 9 — (D 5) No. 2 / 10 Ω, max. (LH)
(i6) No. 7 — (D 5) No. 3 / 10 Ω, max. (LH)

RHD model:

(i6) No. 1 — (D5) No. 1 / 10 Ω, max. (RH)
(i6) No. 8 — (D5) No. 2 / 10 Ω, max. (RH)
(i6) No. 6 — (D5) No. 3 / 10 Ω, max. (RH)
(i6) No. 1 — (D15) No. 1 / 10 Ω, max. (LH)
(i6) No. 9 — (D15) No. 2 / 10 Ω, max. (LH)
(i6) No. 7 — (D15) No. 3 / 10 Ω, max. (LH)

5. CHECK REARVIEW MIRROR MOTOR.

Refer to 6-2 [W18B2] for inspection of rearview mirror motor.