6. Security System

A: ELECTRICAL COMPONENTS LOCATION

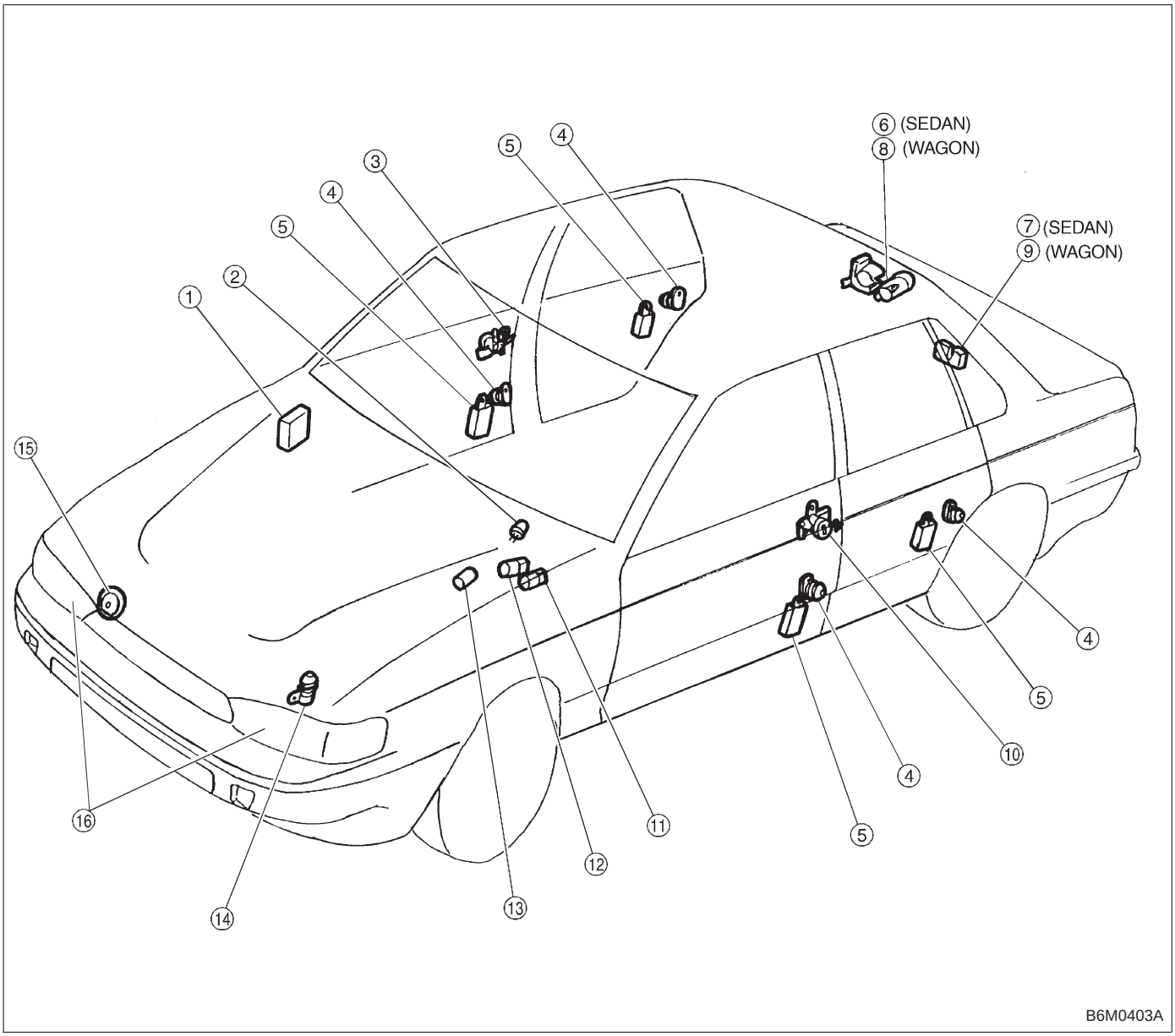

① Security control module
② Security indicator light
③ RH door key cylinder lock/unlock switch (built-in tamper switch)
④ Door switch
⑤ Door lock/unlock switch
⑥ Trunk lid key cylinder unlock switch (SEDAN) (built-in tamper switch)
⑦ Trunk lid switch (SEDAN)
⑧ Rear gate key cylinder lock/unlock switch (WAGON)
⑨ Rear gate switch (WAGON)
⑩ LH door key cylinder lock/unlock switch (built-in tamper switch)
⑪ Starter interrupt relay
⑫ Headlight alarm relay
⑬ Ignition switch (ACC position)
⑭ Engine hood switch
⑮ Horn
⑯ Headlight

B: SCHEMATIC

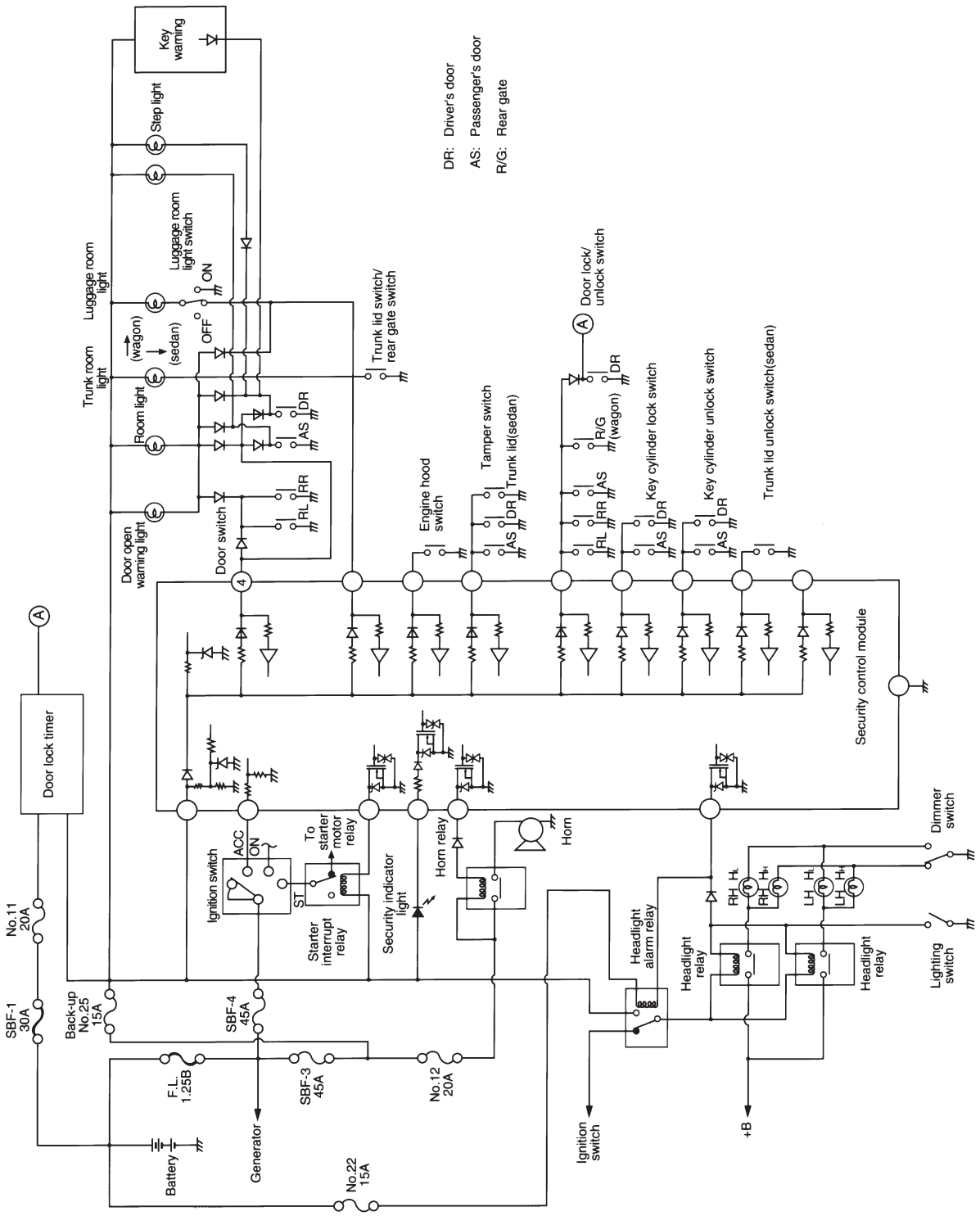

B6H0319

C: CONTROL MODULE I/O SIGNAL

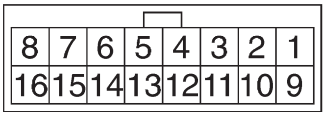

B6M0405

Content	Terminal No.	Measuring conditions and I/O signals (Ignition switch ACC position)
Door lock/unlock switch	1 (INPUT)	● Battery voltage is present when all doors and rear gate (WAGON) are locked. ● “0” volt is present when one of the doors or rear gate (WAGON) is unlocked.
Key cylinder lock switch	2 (INPUT)	● “0” volt is present when key cylinder is turned to LOCK position. ● Battery voltage is present when key cylinder is in positions other than LOCK.
Tamper switch	3 (INPUT)	● Battery voltage is present when key cylinder switch is installed to key cylinder. ● “0” volt is present when key cylinder switch is removed from key cylinder.
Door switch	4 (INPUT)	● Battery voltage is present when all doors are closed. ● “0” volt is present when one of the doors is open.
Starter interrupt relay	5 (OUTPUT)	● Battery voltage is present when ignition switch is turned ACC or ON. ● “0” volt is present when security system is in alarm state.
Ignition switch (ACC)	6 (INPUT)	● Battery voltage is present when ignition switch is turned ACC or ON. ● “0” volt is present when ignition switch is turned OFF.
Security indicator light	7 (OUTPUT)	● Battery voltage is present when indicator light goes off. ● “0” volt is present when indicator light illuminates.
Power supply (back-up)	8	Battery voltage is constantly present.
Ground	9	—
Engine hood switch	10 (INPUT)	● Battery voltage is present when engine hood is closed. ● “0” volt is present when engine hood is open.
Trunk lid switch (SEDAN) Rear gate switch (WAGON)	11 (INPUT)	● Battery voltage is present when trunk lid or rear gate is closed. ● “0” volt is present when trunk lid or rear gate is open.
Headlight alarm relay	12 (OUTPUT)	● Battery voltage is present when ignition switch is turned ACC or ON. ● “0” volt and battery voltage repeats in alarm state. (Headlights flash intermittently at 0.2 sec. ON and 0.6 sec. OFF intervals).
Horn relay	13 (OUTPUT)	● Battery voltage is present when ignition switch is turned ACC or ON. ● “0” volt and battery voltage repeats in alarm state. (Horn sounds intermittently at 0.2 sec. ON and 0.6 sec. OFF intervals.)
Key cylinder unlock switch	14 (INPUT)	● “0” volt is present when key cylinder is turned to UNLOCK position. ● Battery voltage is present when key cylinder is in positions other than UNLOCK.
Trunk lid key cylinder unlock switch (SEDAN)	15 (INPUT)	● “0” volt is present when trunk lid key cylinder is turned to UNLOCK position. ● Battery voltage is present when trunk lid key cylinder is in positions other than UNLOCK.

D: BASIC DIAGNOSTICS PROCEDURE

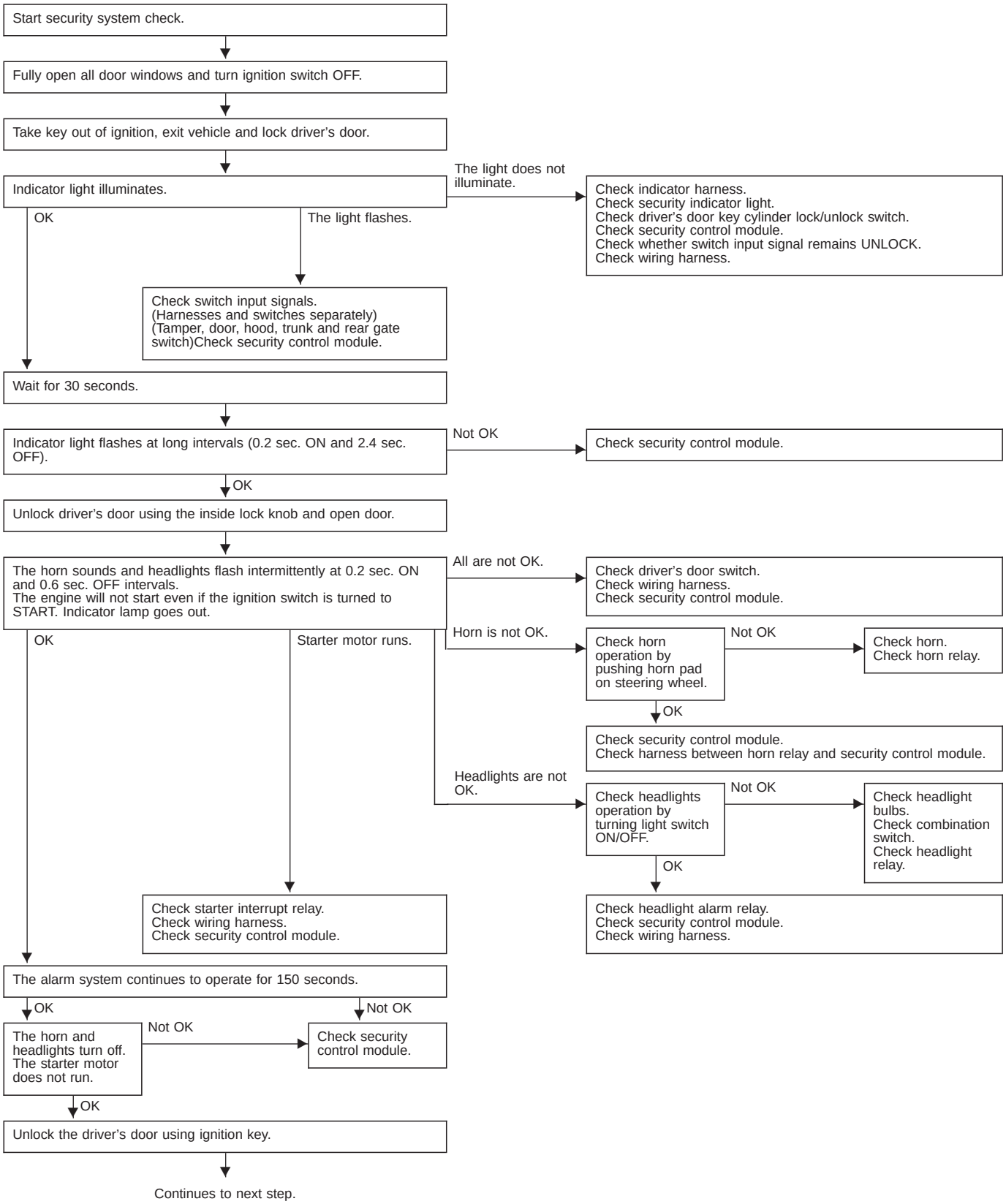

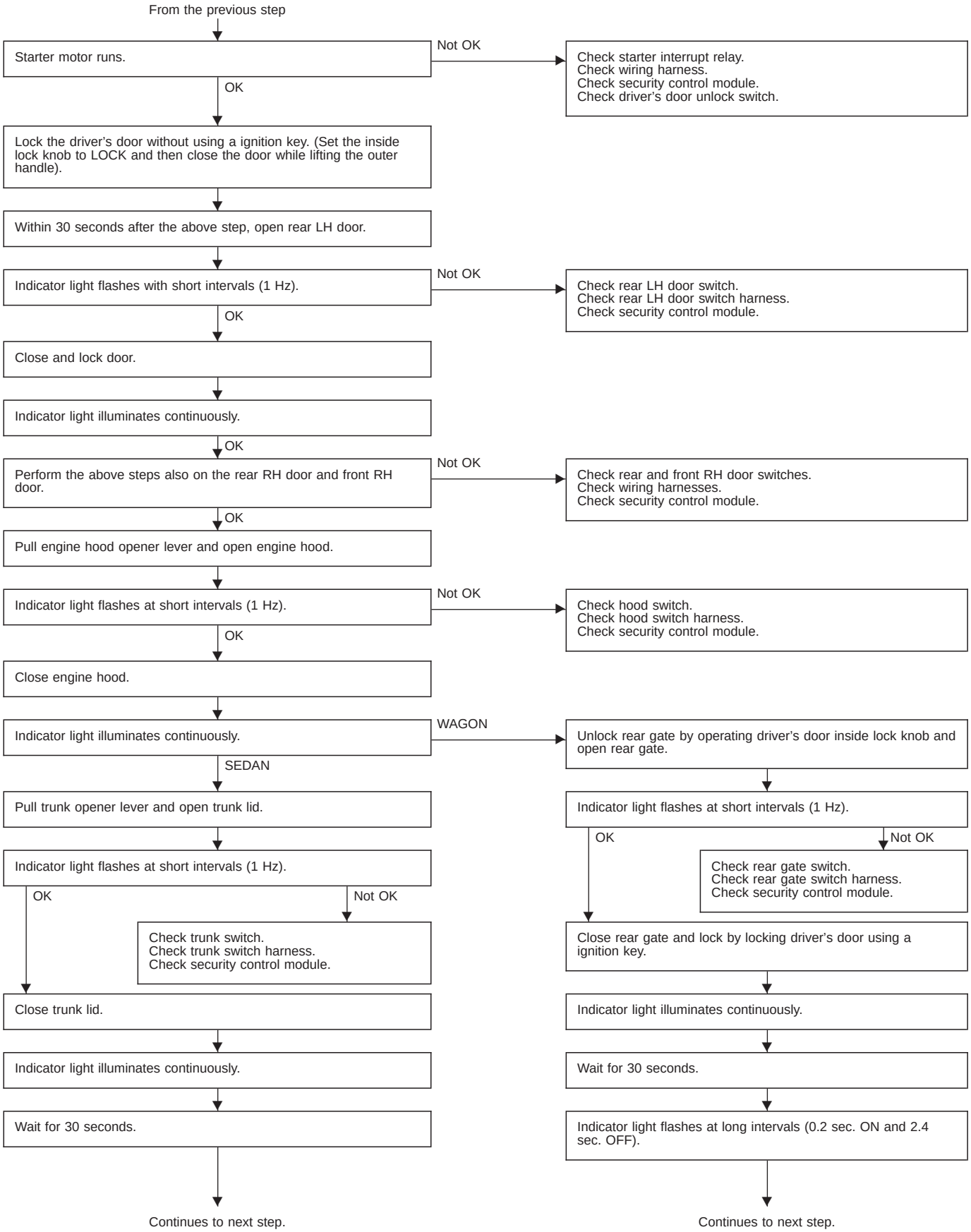
From the previous step
Starter motor runs.
Not OK
Check starter interrupt relay.
Check wiring harness.
Check security control module.
Check driver's door unlock switch.
OK
Lock the driver's door without using a ignition key. (Set the inside lock knob to LOCK and then close the door while lifting the outer handle).
Within 30 seconds after the above step, open rear LH door.
Indicator light flashes with short intervals (1 Hz).
Not OK
Check rear LH door switch.
Check rear LH door switch harness.
Check security control module.
OK
Close and lock door.
Indicator light illuminates continuously.
OK
Perform the above steps also on the rear RH door and front RH door.
Not OK
Check rear and front RH door switches.
Check wiring harnesses.
Check security control module.
OK
Pull engine hood opener lever and open engine hood.
Indicator light flashes at short intervals (1 Hz).
Not OK
Check hood switch.
Check hood switch harness.
Check security control module.
OK
Close engine hood.
Indicator light illuminates continuously.
WAGON
Unlock rear gate by operating driver's door inside lock knob and open rear gate.
Indicator light flashes at short intervals (1 Hz).
OK
Not OK
Check rear gate switch.
Check rear gate switch harness.
Check security control module.
Close rear gate and lock by locking driver's door using a ignition key.
Indicator light illuminates continuously.
Wait for 30 seconds.
Indicator light flashes at long intervals (0.2 sec. ON and 2.4 sec. OFF).
Continues to next step.
SEDAN
Pull trunk opener lever and open trunk lid.
Indicator light flashes at short intervals (1 Hz).
OK
Not OK
Check trunk switch.
Check trunk switch harness.
Check security control module.
Close trunk lid.
Indicator light illuminates continuously.
Wait for 30 seconds.
Continues to next step.

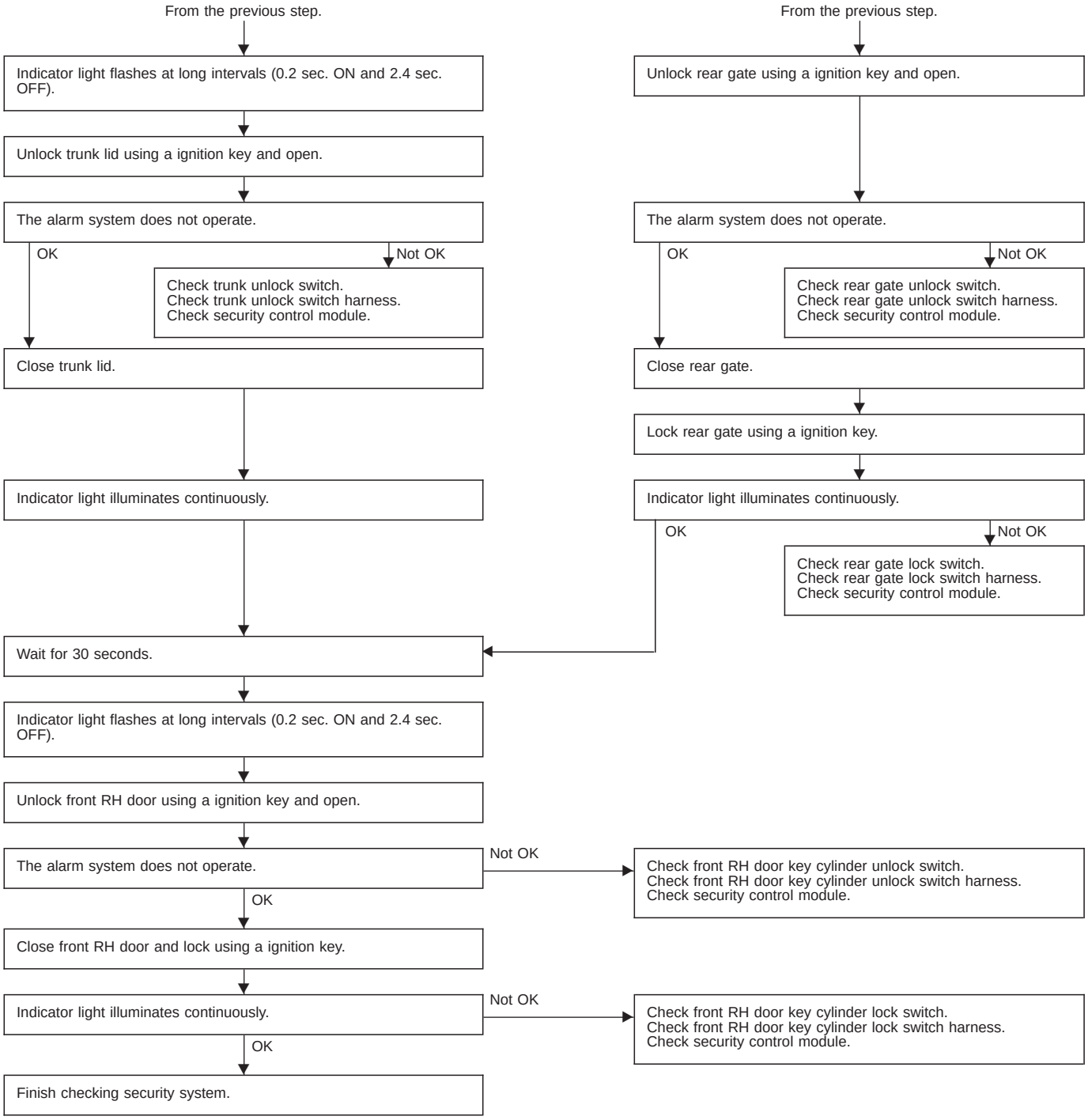
From the previous step.
Indicator light flashes at long intervals (0.2 sec. ON and 2.4 sec. OFF).
Unlock trunk lid using a ignition key and open.
The alarm system does not operate.
OK
Not OK
Check trunk unlock switch.
Check trunk unlock switch harness.
Check security control module.
Close trunk lid.
Indicator light illuminates continuously.
From the previous step.
Unlock rear gate using a ignition key and open.
The alarm system does not operate.
OK
Not OK
Check rear gate unlock switch.
Check rear gate unlock switch harness.
Check security control module.
Close rear gate.
Lock rear gate using a ignition key.
Indicator light illuminates continuously.
OK
Not OK
Check rear gate lock switch.
Check rear gate lock switch harness.
Check security control module.
Wait for 30 seconds.
Indicator light flashes at long intervals (0.2 sec. ON and 2.4 sec. OFF).
Unlock front RH door using a ignition key and open.
The alarm system does not operate.
Not OK
Check front RH door key cylinder unlock switch.
Check front RH door key cylinder unlock switch harness.
Check security control module.
OK
Close front RH door and lock using a ignition key.
Indicator light illuminates continuously.
Not OK
Check front RH door key cylinder lock switch.
Check front RH door key cylinder lock switch harness.
Check security control module.
OK
Finish checking security system.

E: DIAGNOSTICS PROCEDURE FOR SECURITY CONTROL MODULE POWER SUPPLY/GROUND CIRCUIT

1. Check fuse and power supply circuit.
- Not OK → ● Replace fuse. ● Repair or replace wiring harness.
- OK ↓

2. Check ground circuit between security control module and body.
- Not OK → Repair or replace wiring harness.
- OK ↓

Go to next step on basic diagnostics procedure.
<Ref. to 6-2 [K6D0].>

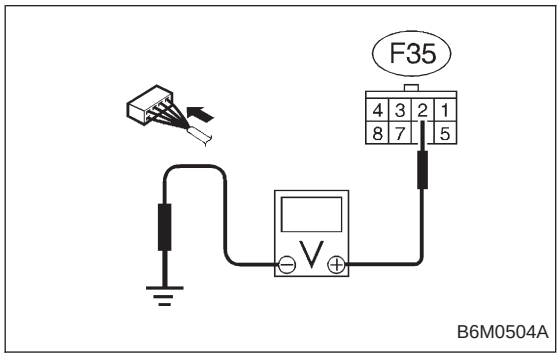

1. CHECK FUSE AND POWER SUPPLY CIRCUIT.

1) Check fuse No. 25.
2) Measure voltage between main fuse box connector and body.

Connector & terminal / Specified voltage:
(F35) No. 2 — Body / 10 V, or more

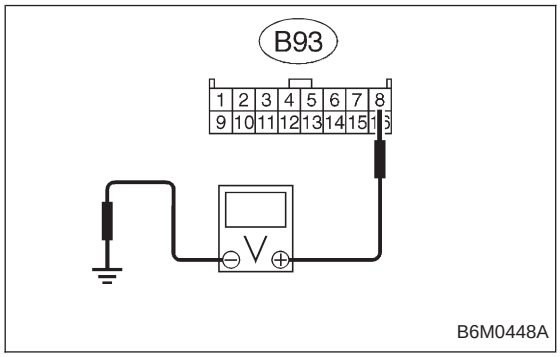

3) Disconnect connector from security control module.
4) Measure voltage between security control module connector and body.

Connector & terminal / Specified voltage:
(B93) No. 8 — Body / 10 V, or more

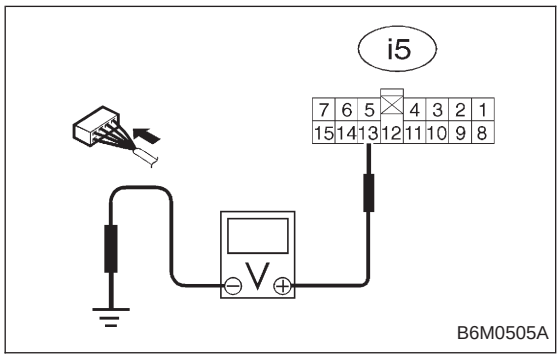

5) Check fuse No. 3.
6) Turn ignition switch to ACC.
7) Measure voltage between fuse and relay box connector and body.

Connector & terminal / Specified voltage:
(i5) No. 13 — Body / 10 V, or more

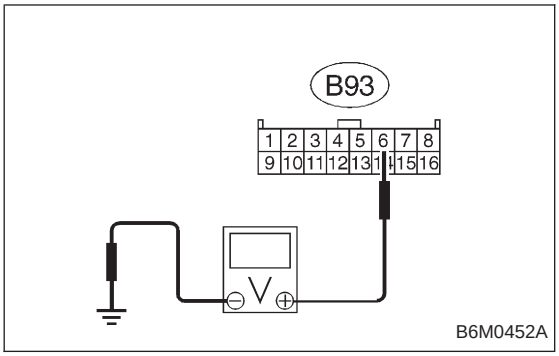

8) Disconnect connector from security control module.
9) Measure voltage between security control module connector and body.

Connector & terminal / Specified voltage:
(B93) No. 6 — Body / 10 V, or more

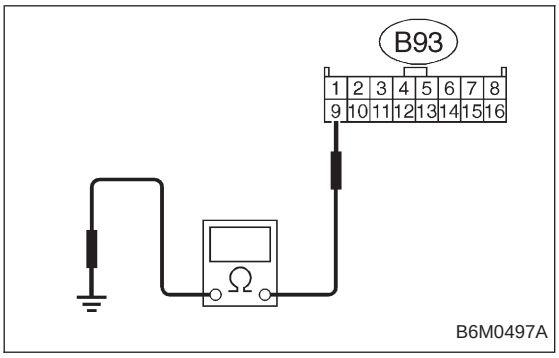

2. CHECK GROUND CIRCUIT BETWEEN SECURITY CONTROL MODULE AND BODY.

1) Turn ignition switch to OFF.
2) Disconnect connector of security control module.
3) Measure resistance of harness connector between security control module and body.

Connector & terminal / Specified resistance:
(B93) No. 9 — Body / 10 Ω, max.

F: DIAGNOSTICS PROCEDURE FOR SECURITY INDICATOR LIGHT AND INDICATOR LIGHT CIRCUIT

1. Check security indicator light.
- Not OK → Replace indicator light.
- OK ↓

2. Check power supply for indicator light.
- Not OK → Repair or replace wiring harness.
- OK ↓

3. Check harness connector between security indicator light and security control module.
- Not OK → Repair or replace wiring harness.
- OK ↓

Go to next step on basic diagnostics procedure.
<Ref. to 6-2 [K6D0].>

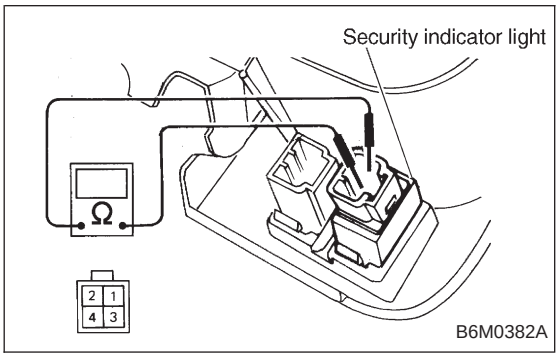

1. CHECK SECURITY INDICATOR LIGHT.

1) Remove security indicator light.
2) Measure resistance between security indicator light connector terminals.

Terminals / Specified resistance:
No. 2 — No. 4 / Approx. 120 Ω

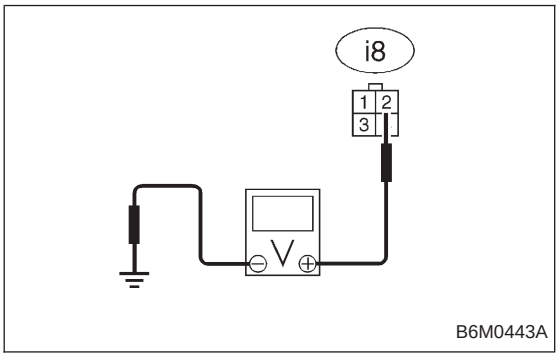

2. CHECK POWER SUPPLY FOR INDICATOR LIGHT.

1) Disconnect connector of security indicator light.
2) Measure voltage between security indicator light connector and body.

Connector & terminal / Specified voltage:
(i8) No. 2 — Body / 10 V, or more

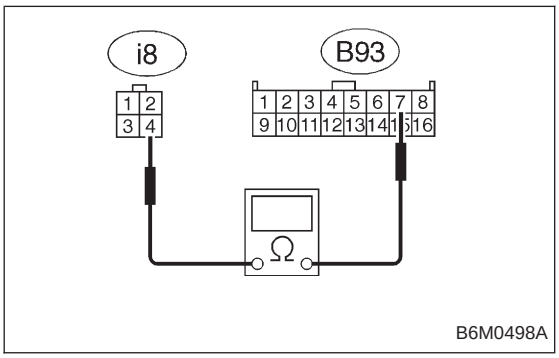

3. CHECK HARNESS CONNECTOR BETWEEN SECURITY INDICATOR LIGHT AND SECURITY CONTROL MODULE.

1) Disconnect connectors of security indicator light and security control module.
2) Measure resistance of harness connector between security indicator light and security control module.

Connector & terminal / Specified resistance:
(i8) No. 4 — (B93) No. 7 / 10 Ω, max.

G: DIAGNOSTICS PROCEDURE FOR DOOR SWITCH SIGNAL

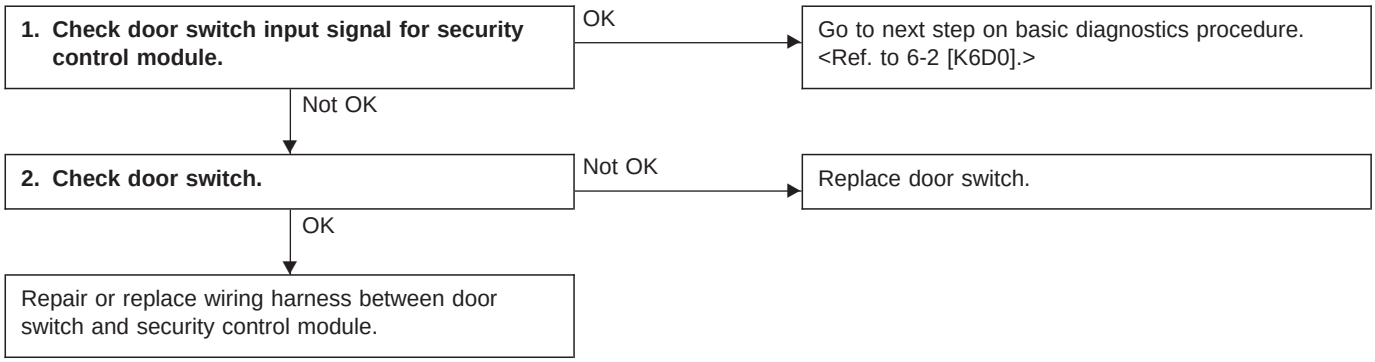

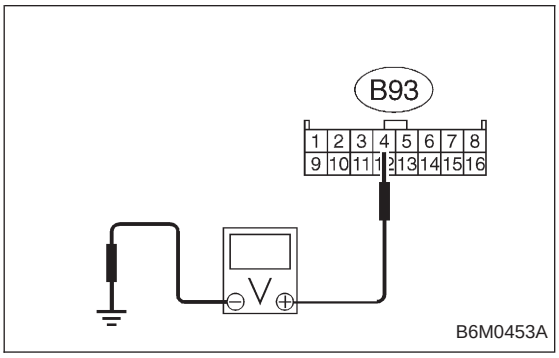

1. CHECK DOOR SWITCH INPUT SIGNAL FOR SECURITY CONTROL MODULE.

1) Remove security control module without disconnecting connector.
2) Turn door switch ON/OFF and measure voltage between security control module connector and body.

Connector & terminal / Specified voltage:
(B93) No. 4 — Body / 10 V, or more (Door closed)
/ 1 V, max. (Door opened)

NOTE:
When one of the doors is open, the voltage may be 1 V, max.

2. CHECK DOOR SWITCH.

Refer to 6-2 [W8B1] for inspection of door switch.

NOTE:
The door switch is used for interior light also.

H: DIAGNOSTICS PROCEDURE FOR ENGINE HOOD SWITCH SIGNAL

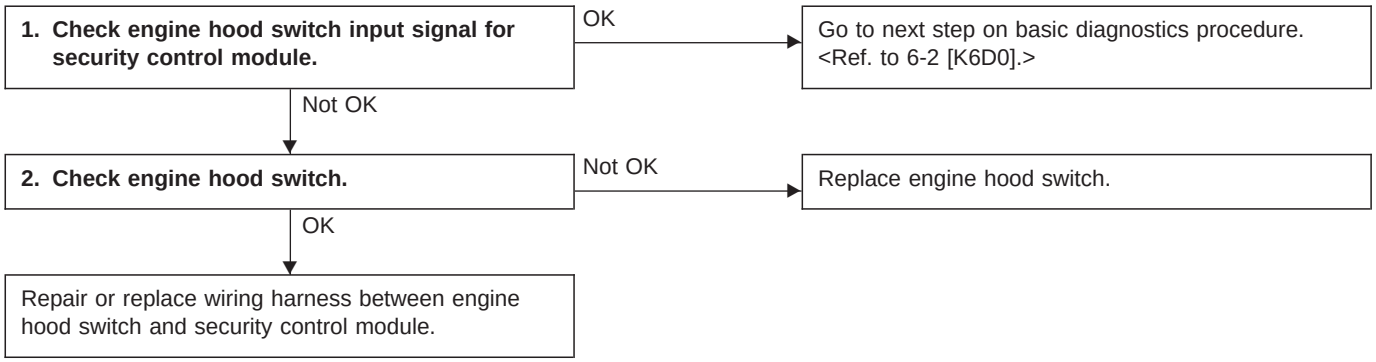

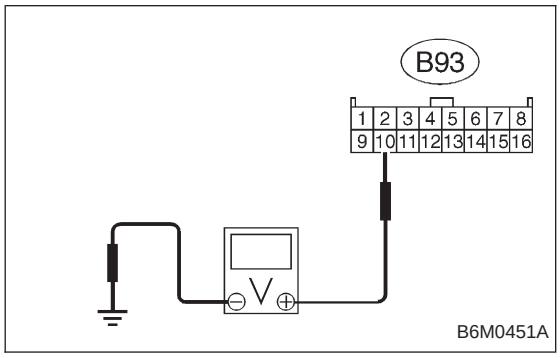

1. CHECK ENGINE HOOD SWITCH INPUT SIGNAL FOR SECURITY CONTROL MODULE.

1) Remove security control module without disconnecting connector.
2) Turn engine hood switch ON/OFF and measure voltage between security control module connector and body.

Connector & terminal / Specified voltage:
(B93) No. 10 — Body / 10 V, or more (Hood closed)
/ 1 V, max. (Hood opened)

2. CHECK ENGINE HOOD SWITCH.

Refer to 6-2 [W22B3] for inspection of engine hood switch.

I: DIAGNOSTICS PROCEDURE FOR TRUNK LID SWITCH (SEDAN) OR REAR GATE SWITCH (WAGON) SIGNAL

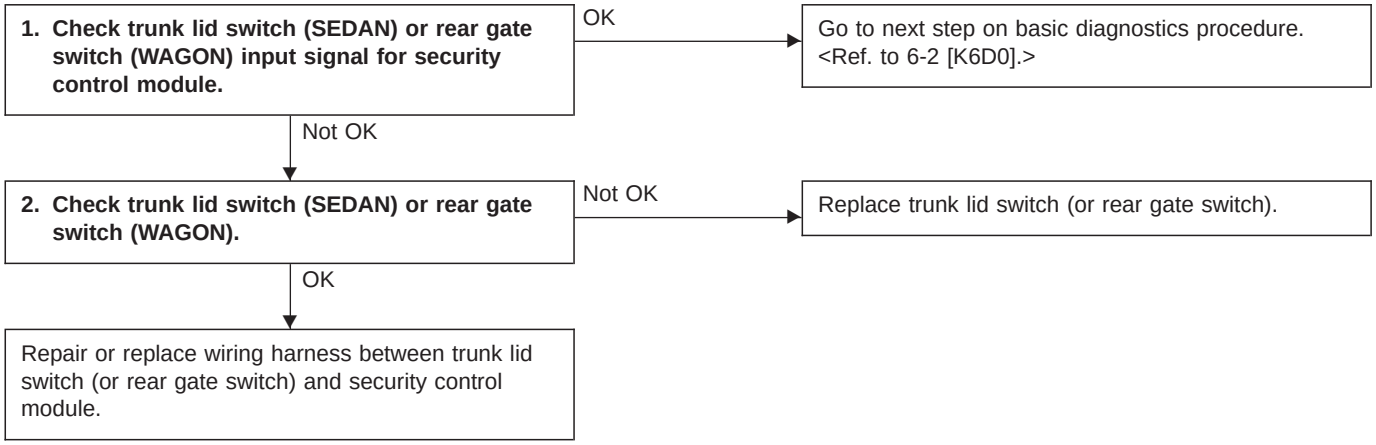

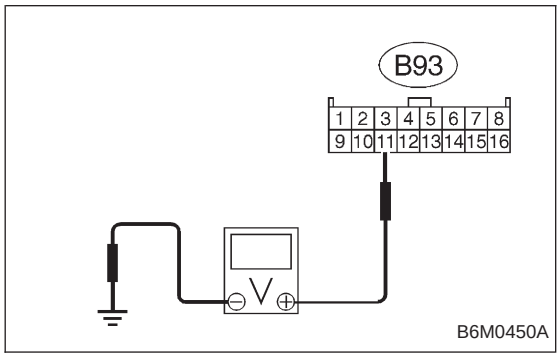

1. CHECK TRUNK LID SWITCH (SEDAN) OR REAR GATE SWITCH (WAGON) INPUT SIGNAL FOR SECURITY CONTROL MODULE.

1) Remove security control module without disconnecting connector.
2) Turn trunk lid switch (or rear gate switch) ON/OFF and measure voltage between security control module connector and body.

Connector & terminal / Specified voltage:
(B93) No. 11 — Body / 10 V, or more (Lid or gate closed) / 1 V, max. (Lid or gate opened)

2. CHECK TRUNK LID SWITCH (SEDAN) OR REAR GATE SWITCH (WAGON).

Refer to 6-2 [W8B2/W8B3] for inspection of trunk lid switch/rear gate switch.

NOTE:
The trunk lid switch/rear gate switch is used for both trunk room light/luggage room light.

J: DIAGNOSTICS PROCEDURE FOR DOOR LOCK/UNLOCK SWITCH SIGNAL

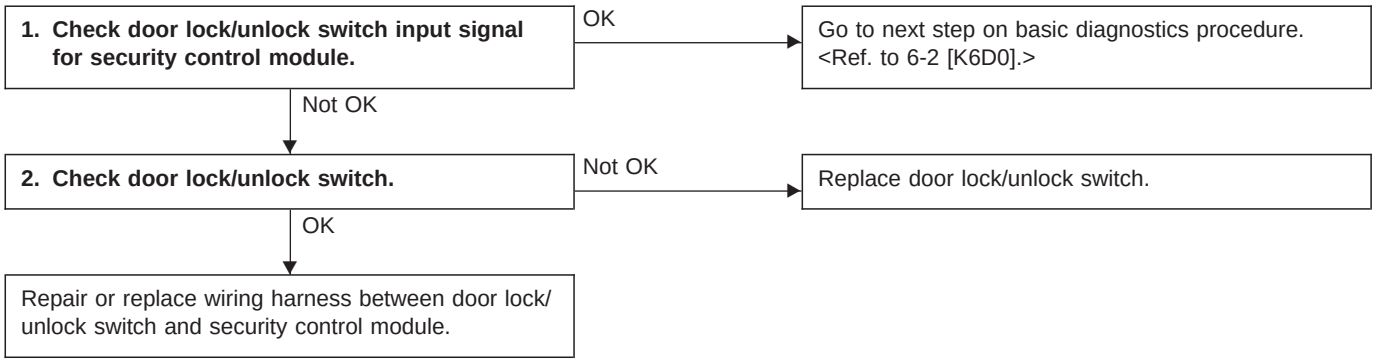

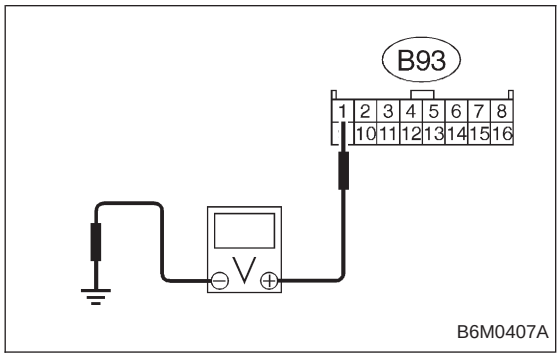

1. CHECK DOOR LOCK/UNLOCK SWITCH INPUT SIGNAL FOR SECURITY CONTROL MODULE.

1) Remove security control module without disconnecting connector.
2) Close all the doors and rear gate (WAGON), and lock with ignition key.
3) Measure voltage between security control module connector and body.

Connector & terminal / Specified voltage:
(B93) No. 1 — Body / 10 V, or more

NOTE:
When one of the door (driver, passenger or rear gate) lock knobs is in unlocked position, the voltage may be 1 V, max.

4) Unlock the door with ignition key.
5) Measure voltage between security control module connector and body.

Connector & terminal / Specified voltage:
(B93) No. 1 — Body / 1 V, max.

2. CHECK DOOR LOCK/UNLOCK SWITCH.

Refer to 6-2 [W22B5] for inspection of door lock/unlock switch.

K: DIAGNOSTICS PROCEDURE FOR KEY CYLINDER LOCK/UNLOCK SWITCH AND TAMPER SWITCH SIGNAL

NOTE:
Key cylinder lock switch, key cylinder unlock switch and tamper switch are combined as a unit.

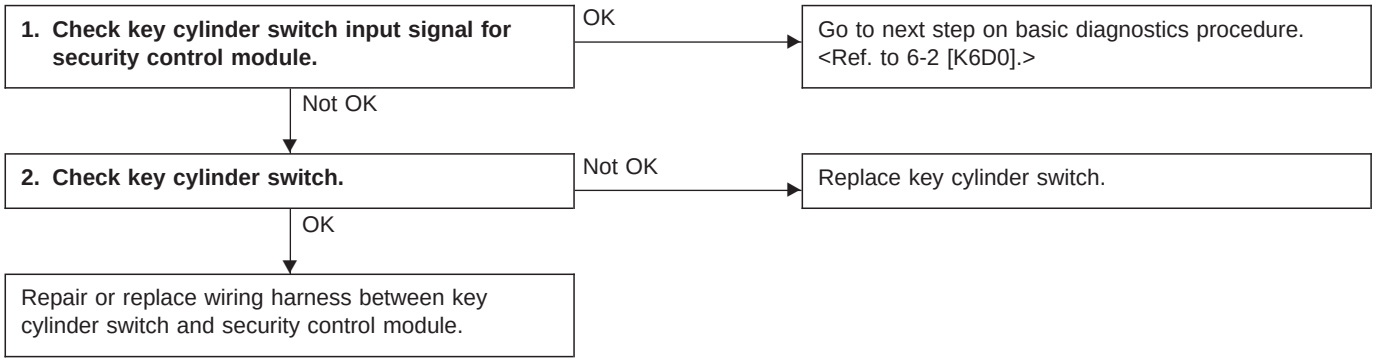

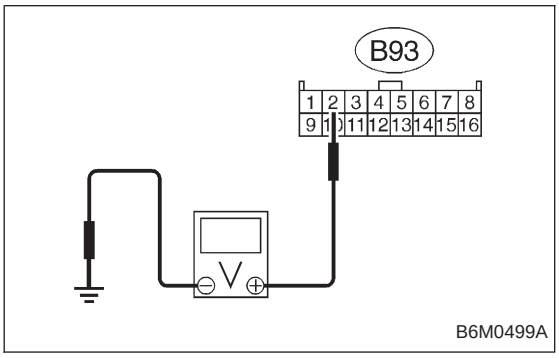

1. CHECK KEY CYLINDER SWITCH INPUT SIGNAL FOR SECURITY CONTROL MODULE.

1) Remove security control module without disconnecting connector.
2) Measure voltage between security control module connector and body while turning each key cylinder with ignition key.

Doors (RH and LH), and rear gate (WAGON)

Connector & terminal / Specified voltage:
(B93) No. 2 — Body / 1 V, max. (LOCK position) / 10 V, or more (other than LOCK position)

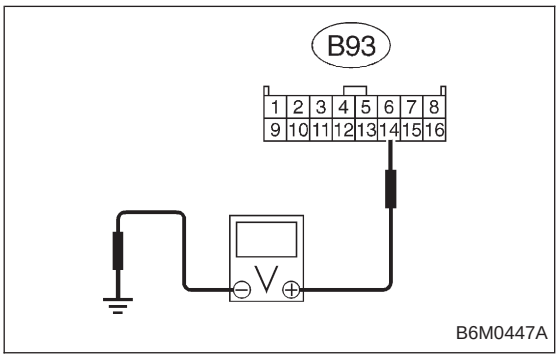

(B93) No. 14 — Body / 1 V, max. (UNLOCK position) / 10 V, or more (other than UNLOCK position)

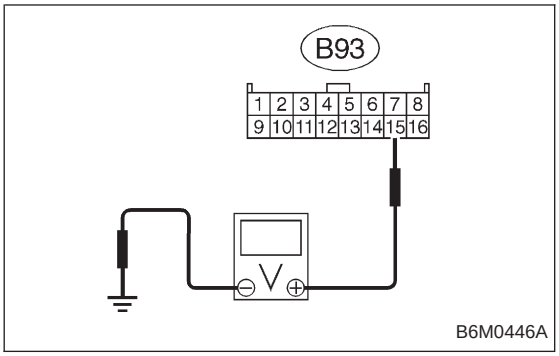

Trunk lid (SEDAN)

Connector & terminal / Specified voltage:
(B93) No. 15 — Body / 1 V, max. (UNLOCK position) / 10 V, or more (other than UNLOCK position)

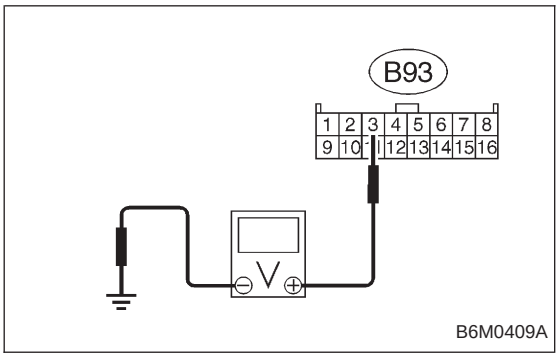

3) Measure voltage between security control module connector and body while removing/installing key cylinder switch from/to door outer handle.

Connector & terminal / Specified voltage:
(B93) No. 3 — Body / 10 V, or more (Switch is installed.) / 1 V, max. (Switch is removed.)

NOTE:
For SEDAN vehicles, remove key cylinder switch from trunk lid key cylinder to perform the above inspection.

2. CHECK KEY CYLINDER SWITCH.

Refer to 6-2 [W22B4] for inspection of key cylinder lock/unlock switch and tamper switch.

L: DIAGNOSTICS PROCEDURE FOR STARTER INTERRUPT SIGNAL

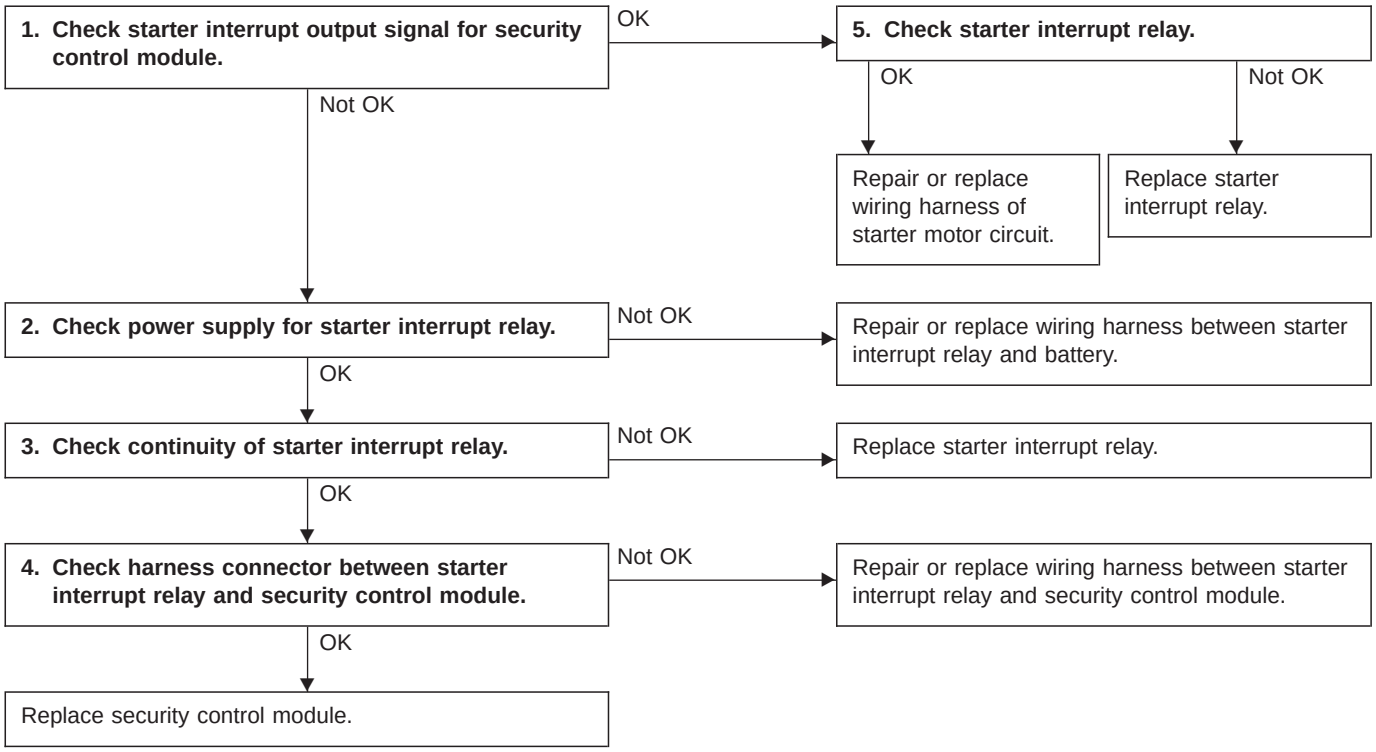

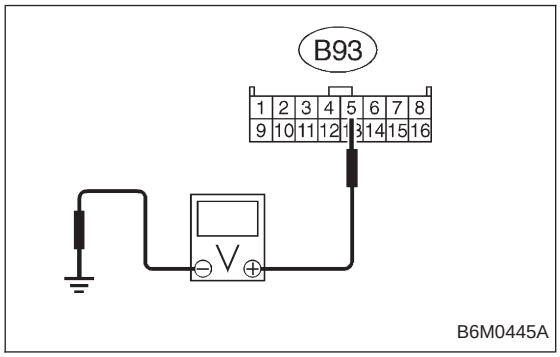

1. CHECK STARTER INTERRUPT OUTPUT SIGNAL FOR SECURITY CONTROL MODULE.

1) Remove security control module without disconnecting connector.
2) Measure voltage between security control module connector and body.

Connector & terminal / Specified voltage:
(B93) No. 5 — Body / 10 V, or more

3) Set security system in armed state.
4) Open the door without ignition key to operate the security system (alarm state).
5) Measure voltage between security control module and body during alarm state.

Connector & terminal / Specified voltage:
(B93) No. 5 — Body / 1 V, max.

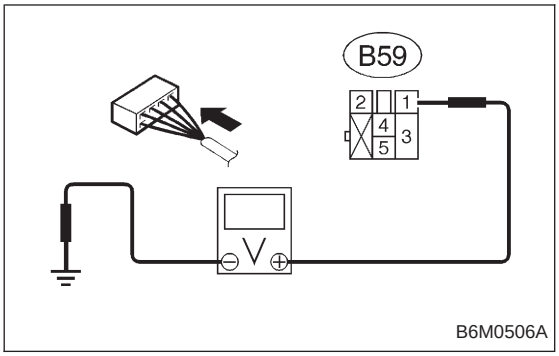

2. CHECK POWER SUPPLY FOR STARTER INTERRUPT RELAY.

1) Remove starter interrupt relay without disconnecting connector.
2) Measure voltage between starter interrupt relay connector and body.

Connector & terminal / Specified voltage:
(B59) No. 1 — Body / 10 V, or more

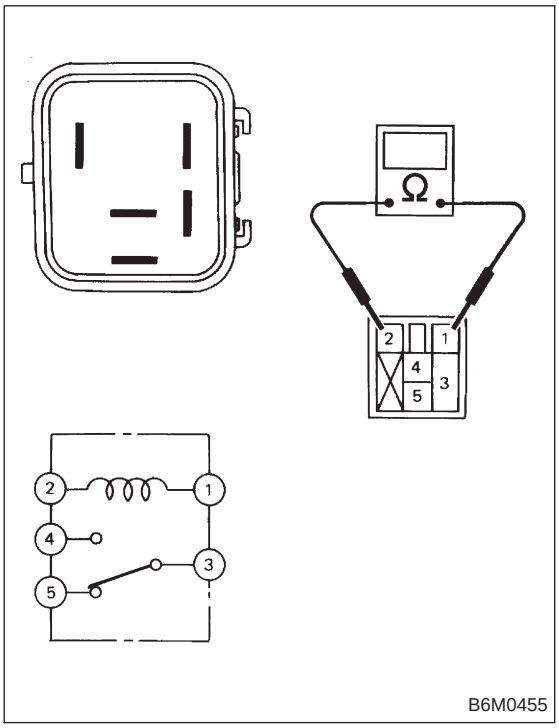

3. CHECK CONTINUITY OF STARTER INTERRUPT RELAY.

1) Remove starter interrupt relay.
2) Check continuity between terminals No. 1 and No. 2 of starter interrupt relay.

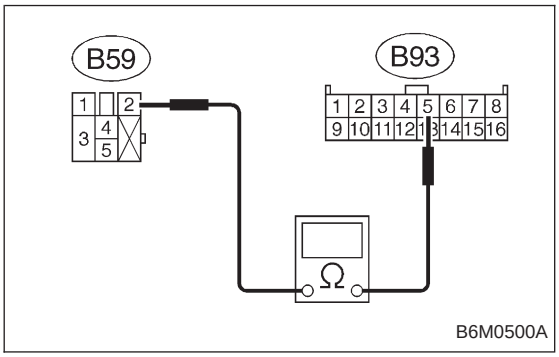

4. CHECK HARNESS CONNECTOR BETWEEN STARTER INTERRUPT RELAY AND SECURITY CONTROL MODULE.

1) Disconnect connectors of starter interrupt relay and security control module.
2) Measure resistance of harness connector between starter interrupt relay and security control module.

Connector & terminal / Specified resistance:
(B59) No. 2 — (B93) No. 5 / 10 Ω, max.

5. CHECK STARTER INTERRUPT RELAY.

Refer to 6-2 [W22B1] for inspection of starter interrupt relay.

M: DIAGNOSTICS PROCEDURE FOR HORN ALARM SIGNAL

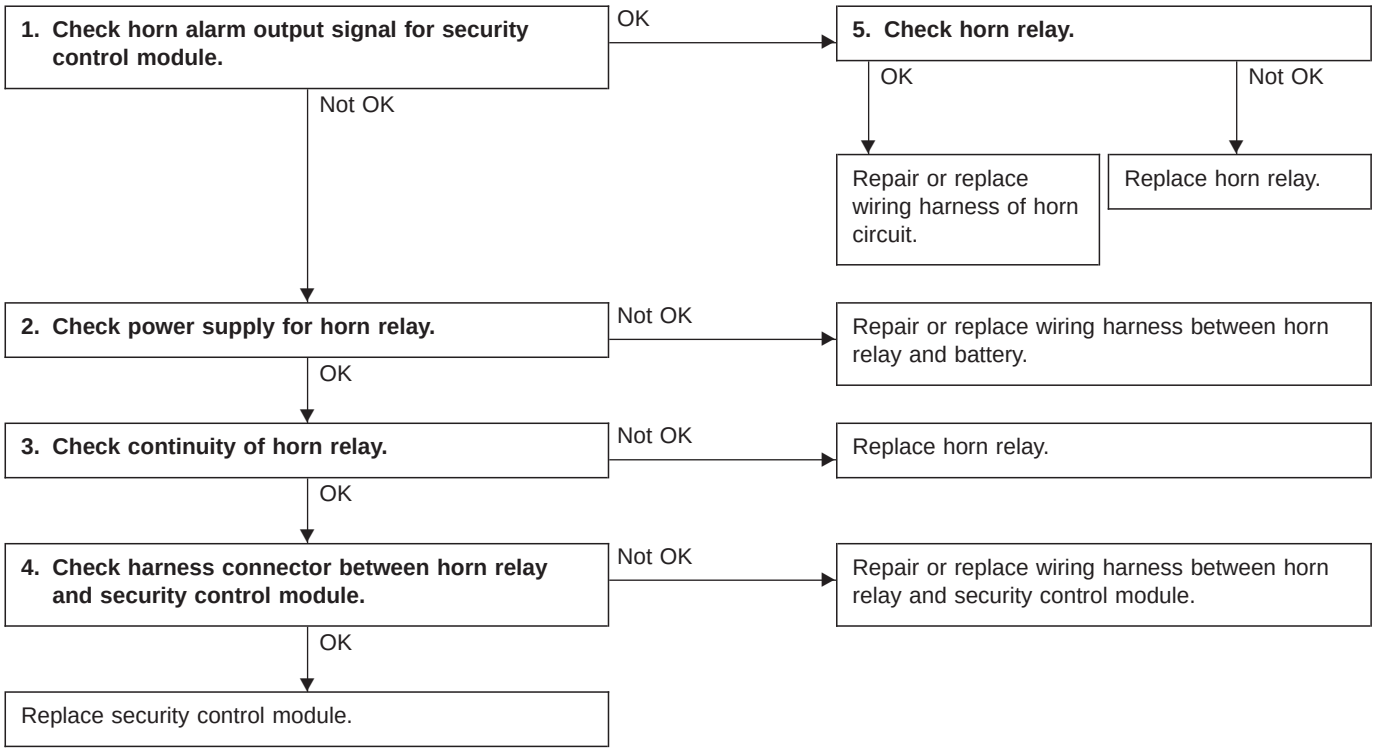

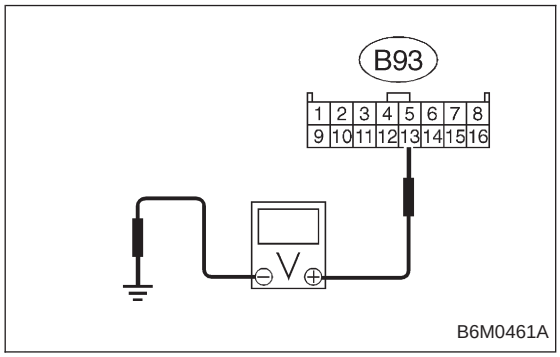

1. CHECK HORN ALARM OUTPUT SIGNAL FOR SECURITY CONTROL MODULE.

1) Remove security control module without disconnecting connector.
2) Measure voltage between security control module connector and body.

Connector & terminal / Specified voltage:
(B93) No. 13 — Body / 10 V, or more

3) Set security system in armed state.
4) Open the door without ignition key to operate the security system (alarm state).
5) Measure voltage between security control module and body during alarm state.

Connector & terminal / Specified voltage:
(B93) No. 13 — Body / repeats 1 V, max. (0.2 sec.) and 10 V, or more (0.6 sec.) intervals

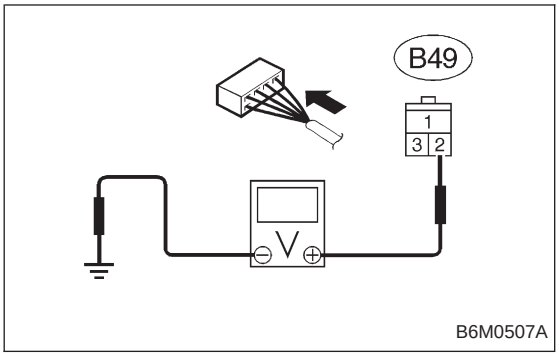

2. CHECK POWER SUPPLY FOR HORN RELAY.

1) Check fuse No. 12.
2) Remove horn relay without disconnecting connector.
3) Measure voltage between horn relay connector and body.

Connector & terminal / Specified voltage:
(B49) No. 2 — Body / 10 V, or more

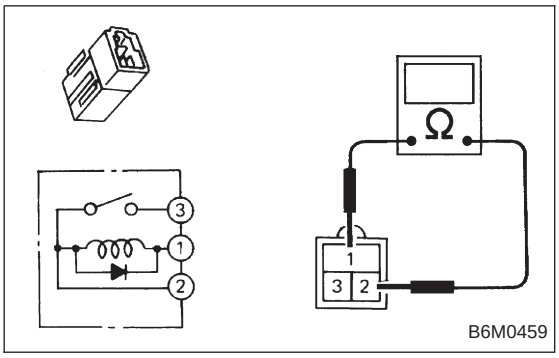

3. CHECK CONTINUITY OF HORN RELAY.

1) Remove horn relay.
2) Check continuity between terminals No. 1 and No. 2 of horn relay.

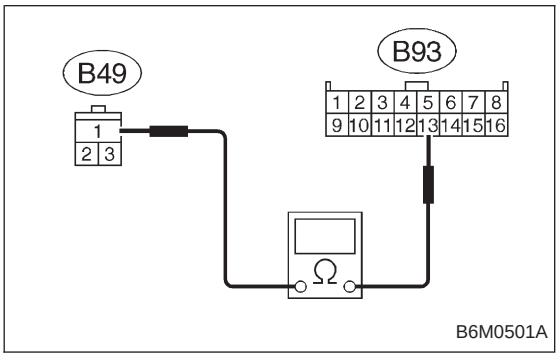

4. CHECK HARNESS CONNECTOR BETWEEN HORN RELAY AND SECURITY CONTROL MODULE.

1) Disconnect connectors of horn relay and security control module.
2) Measure resistance of harness connector between horn relay and security control module.

Connector & terminal / Specified resistance:
(B49) No. 1 — (B93) No. 13 / 10 Ω, max.

5. CHECK HORN RELAY.

Refer to 6-2 [W15B2] for inspection of horn relay.

N: DIAGNOSTICS PROCEDURE FOR HEADLIGHT ALARM SIGNAL

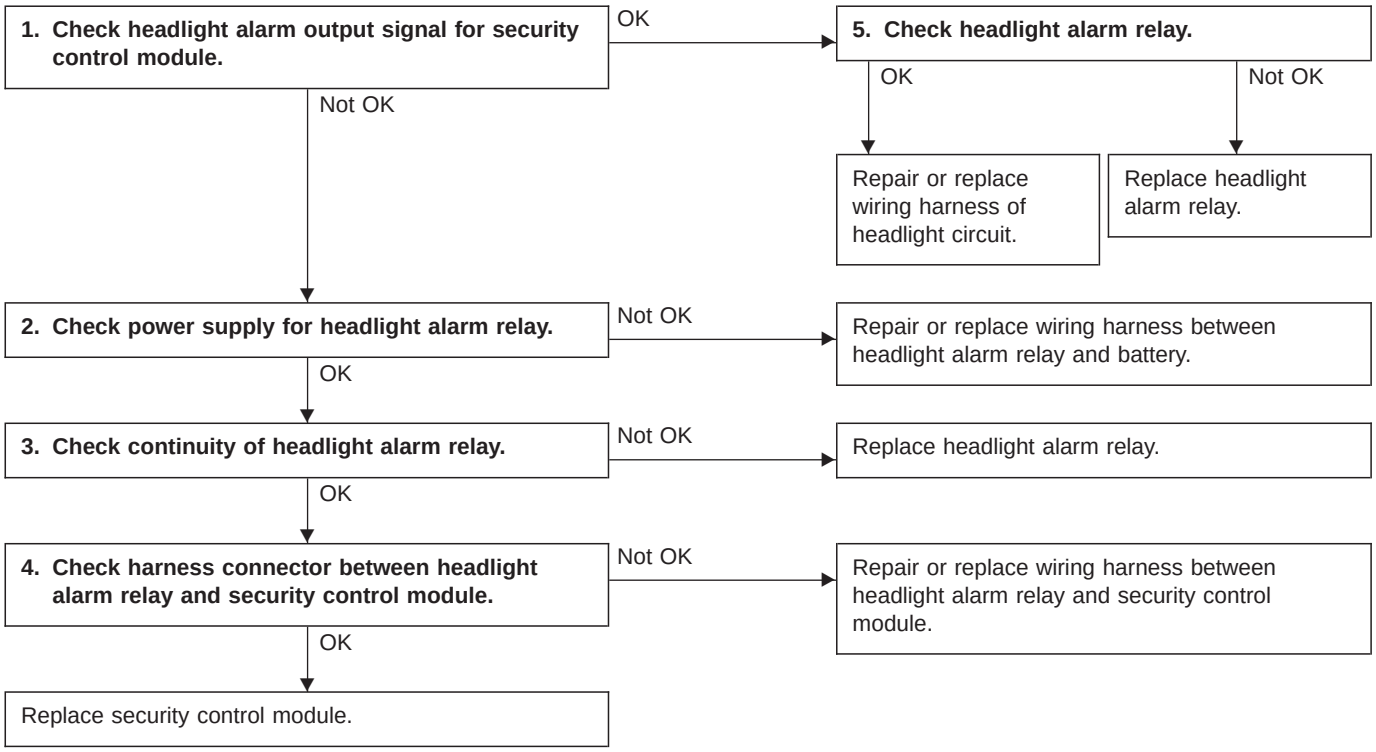

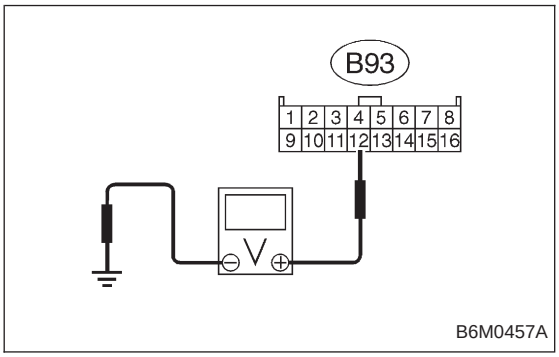

1. CHECK HEADLIGHT ALARM OUTPUT SIGNAL FOR SECURITY CONTROL MODULE.

1) Remove security control module without disconnecting connector.
2) Measure voltage between security control module connector and body.

Connector & terminal / Specified voltage:
(B93) No. 12 — Body / 10 V, or more

3) Set security system in armed state.
4) Open the door without ignition key to operate the security system (alarm state).
5) Measure voltage between security control module and body during alarm state.

Connector & terminal / Specified voltage:
(B93) No. 12 — Body / repeats 1 V, max. (0.2 sec.) and 10 V, or more (0.6 sec.) intervals

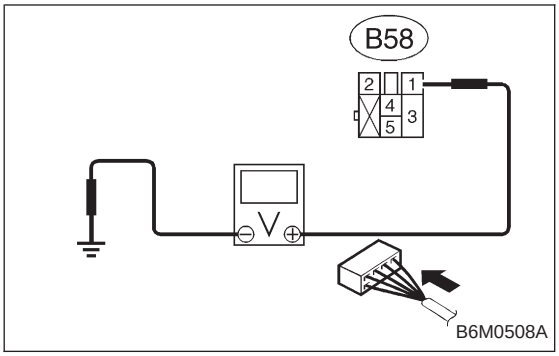

2. CHECK POWER SUPPLY FOR HEADLIGHT ALARM RELAY.

1) Remove headlight alarm relay without disconnecting connector.
2) Measure voltage between headlight alarm relay connector and body.

Connector & terminal / Specified voltage:
(B58) No. 1 — Body / 10 V, or more

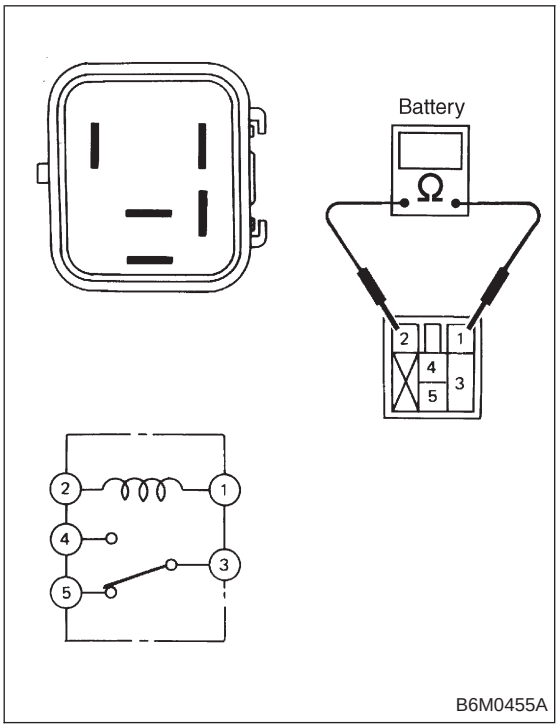

3. CHECK CONTINUITY OF HEADLIGHT ALARM RELAY.

1) Remove headlight alarm relay.
2) Check continuity between terminals No. 1 and No. 2 of headlight alarm relay.

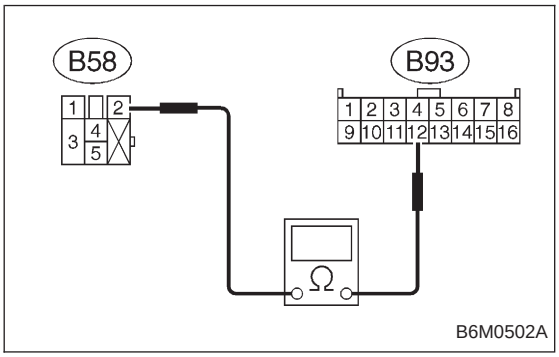

4. CHECK HARNESS CONNECTOR BETWEEN HEADLIGHT ALARM RELAY AND SECURITY CONTROL MODULE.

1) Disconnect connectors of headlight alarm relay and security control module.
2) Measure resistance of harness connector between headlight alarm relay and security control module.

Connector & terminal / Specified resistance:
(B58) No. 2 — (B93) No. 12 / 10 Ω, max.

5. CHECK HEADLIGHT ALARM RELAY.

Refer to 6-2 [W22B2] for inspection of headlight alarm relay.