1. Starter Interlock System (MT Model)

A: DIAGNOSTICS PROCEDURE

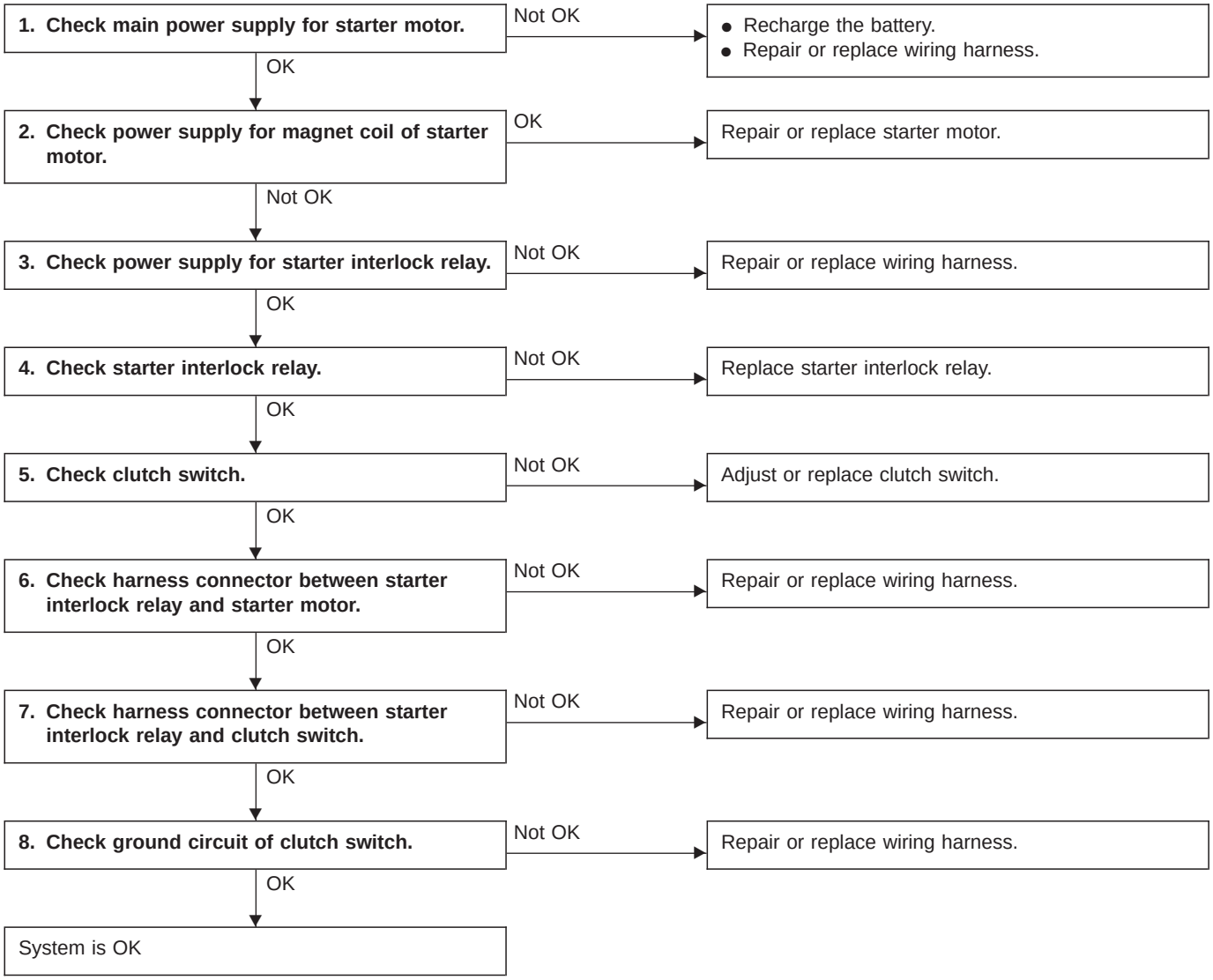

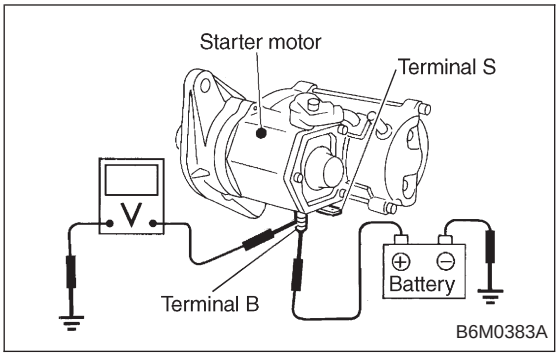

1. CHECK MAIN POWER SUPPLY FOR STARTER MOTOR.

Measure voltage between starter motor terminal B and body.

Connector & terminal / Specified voltage:
Terminal B — Body / 10 V, or more

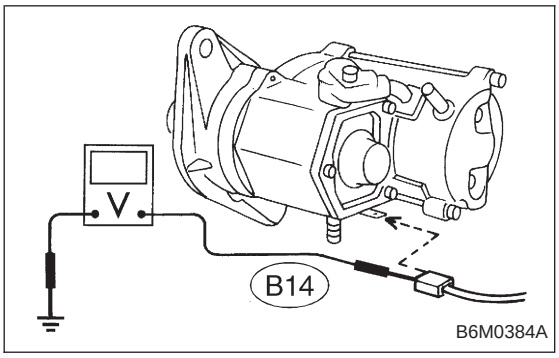

2. CHECK POWER SUPPLY FOR MAGNET COIL OF STARTER MOTOR.

1) Disconnect all connectors from starter motor.
2) Turn ignition switch to ST (START).
3) Depress clutch pedal.
4) Measure voltage between starter motor terminal S connector and body.

Connector & terminal / Specified voltage:
(B14) Terminal S — Body / 10 V, or more

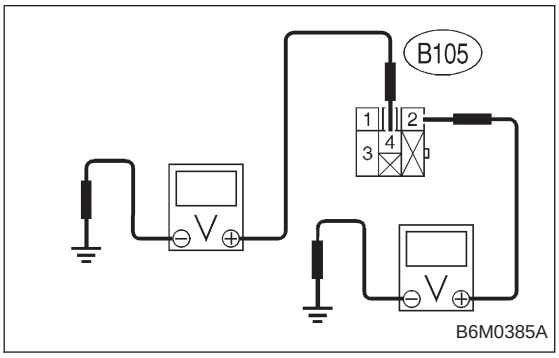

3. CHECK POWER SUPPLY FOR STARTER INTERLOCK RELAY.

1) Disconnect all connectors from starter motor.
2) Disconnect connector of starter interlock relay.
3) Turn ignition switch to ST (START).
4) Measure voltage between starter interlock relay connector and body.

Connector & terminal / Specified voltage:
(B105) No. 2 — Body / 10 V, or more
(B105) No. 4 — Body / 10 V, or more

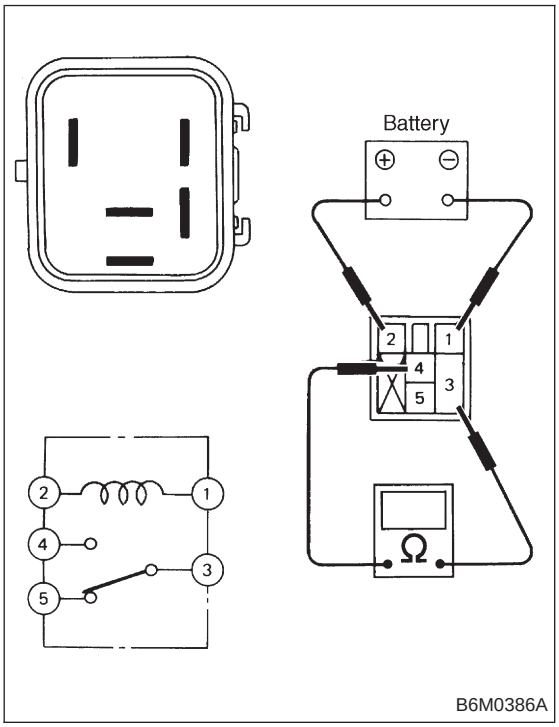

4. CHECK STARTER INTERLOCK RELAY.

1) Disconnect connector of starter interlock relay.
2) Connect battery to terminal No. 2 and ground terminal No. 1.
3) Check continuity between terminals as indicated in table below:

When current flows.	Between terminals No. 3 and No. 4	Continuity exists.
When current does not flow.	Between terminals No. 3 and No. 4	Continuity does not exist.
	Between terminals No. 1 and No. 2	Continuity exists.

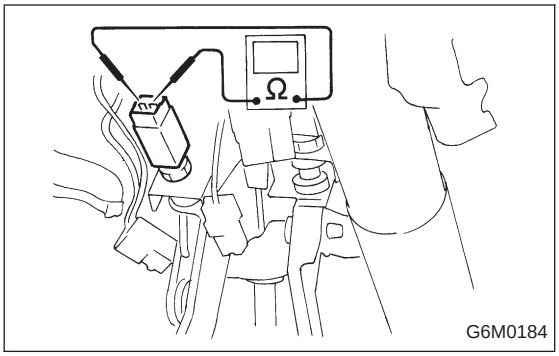

5. CHECK CLUTCH SWITCH.

1) Disconnect connector of clutch switch.
2) Check continuity between terminals when clutch pedal is depressed/released.

Terminals / Specified resistance:
No. 1 — No. 2 / 10 Ω, max.
(Without pedal depressing.)
/ 1 MΩ, min. (Pedal depressing.)

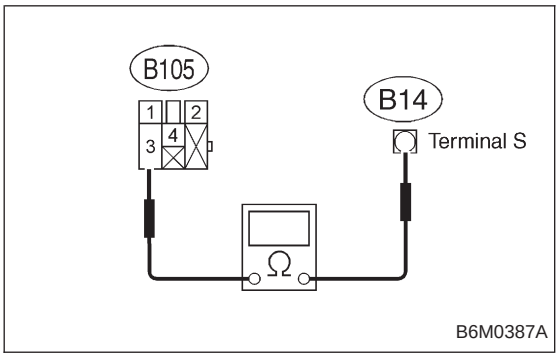

6. CHECK HARNESS CONNECTOR BETWEEN STARTER INTERLOCK RELAY AND STARTER MOTOR.

1) Disconnect connectors of starter interlock relay and starter motor.
2) Measure resistance of harness connector between starter interlock relay and starter motor.

Connector & terminal / Specified resistance:
(B105) No. 3 — (B14) terminal S / 10 Ω, max.

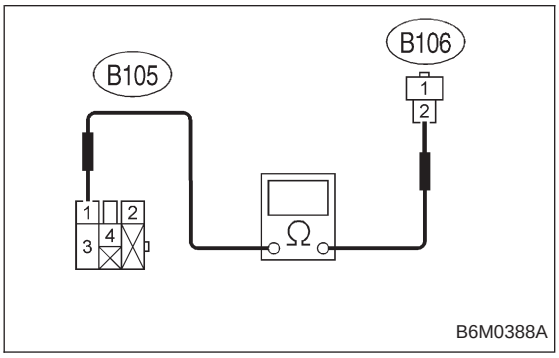

7. CHECK HARNESS CONNECTOR BETWEEN STARTER INTERLOCK RELAY AND CLUTCH SWITCH.

1) Disconnect connectors of starter interlock relay and clutch switch.
2) Measure resistance of harness connector between starter interlock relay and clutch switch.

Connector & terminal / Specified resistance:
(B105) No. 1 — (B106) No. 2 / 10 Ω, max.

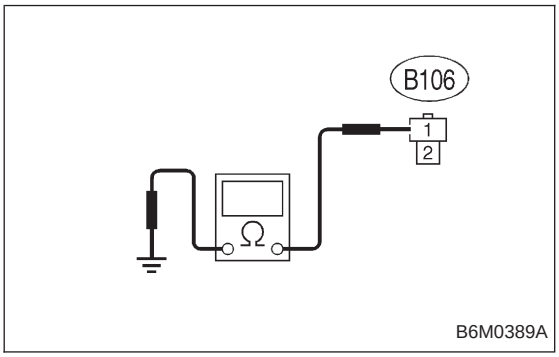

8. CHECK GROUND CIRCUIT OF CLUTCH SWITCH.

1) Disconnect connector of clutch switch.
2) Measure resistance of harness connector between clutch switch and body.

Connector & terminal / Specified resistance:
(B106) No. 1 — Body / 10 Ω, max.