7. Back-up Light

A: REMOVAL AND INSTALLATION

1. BACK-UP LIGHT

Refer to 6-2 [W5A2] as for removal and installation of rear finisher.

2. BACK-UP LIGHT SWITCH (MT MODEL)

Refer to 3-1 [W2B1 (AWD) or W3A0 (FWD)] as for removal and installation of back-up light switch.

3. INHIBITOR SWITCH (AT MODEL)

Refer to 3-2 [W4A4] as for removal and installation of inhibitor switch (R position switch).

B: INSPECTION

1. INHIBITOR SWITCH (AT MODEL)

Refer to 3-2 [W2B2] as for inspection of inhibitor switch.

8. Room Light and Door Switch

A: REMOVAL AND INSTALLATION

1. ROOM LIGHT

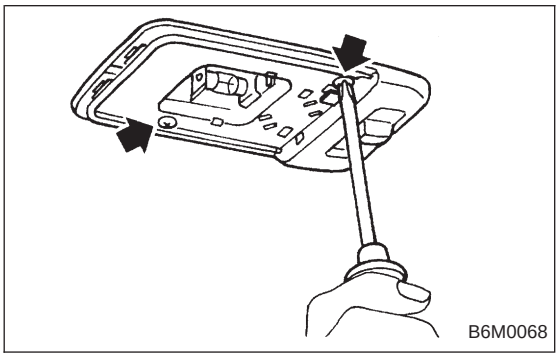

1) Pry room light lens off using a screwdriver.
2) Remove screws which secure room light body.
3) Remove room light body while disconnecting connector.

2. TRUNK ROOM LIGHT (SEDAN)

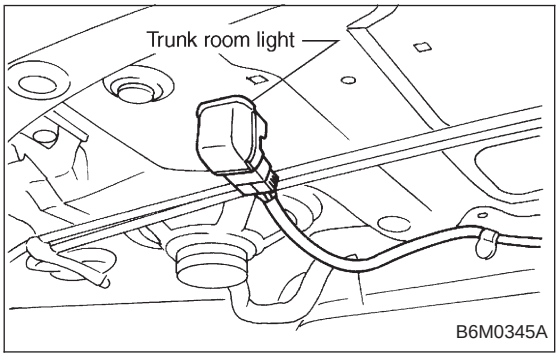

1) Turn trunk room light body by hand and remove it from rear shelf panel.
2) Disconnect connector of trunk room light.

3. LUGGAGE ROOM LIGHT (WAGON)

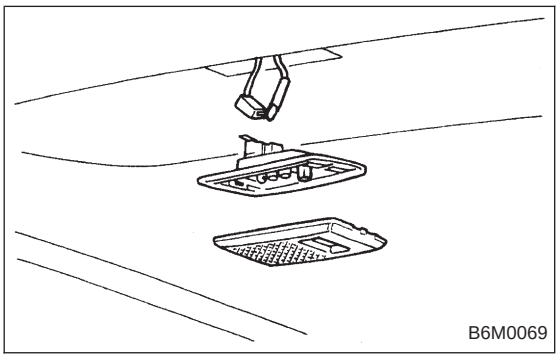

1) Pry luggage room light lens off using a screwdriver.
2) Remove screws which secure luggage room light body.
3) Remove luggage room light body while disconnecting connector.