1. Precaution

● Before disassembling or reassembling parts, always disconnect battery ground cable. When repairing radio, control modules, etc. which are provided with memory functions, record memory contents before disconnecting battery ground cable. Otherwise, these contents are cancelled upon disconnection.
● Reassemble parts in reverse order of disassembly procedure unless otherwise indicated.
● Adjust parts to specifications contained in this manual if so designated.
● Connect connectors and hoses securely during reassembly.
● After reassembly, ensure functional parts operate smoothly.

CAUTION:
● Airbag system wiring harness is routed near the electrical parts and switch.
● All Airbag system wiring harness and connectors are colored yellow. Do not use electrical test equipment on these circuit.
● Be careful not to damage Airbag system wiring harness when servicing the ignition key cylinder.

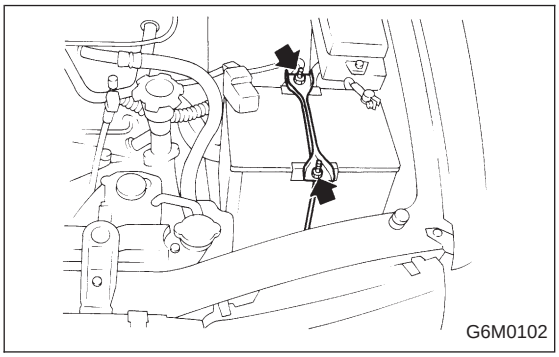

2. Battery

A: REMOVAL AND INSTALLATION

1. BATTERY

1) Disconnect the positive (+) terminal after disconnecting the negative (−) terminal of battery.
2) Remove flange nuts from battery rods and take off battery holder.
3) Remove battery.

Tightening torque:
3.4±1.0 N·m (0.35±0.1 kg-m, 2.5±0.7 ft-lb)

NOTE:
● Clean battery cable terminals and apply grease to retard the formation of corrosion.
● Connect the positive (+) terminal of battery and then the negative (−) terminal of the battery.

B: INSPECTION

1. BATTERY

1) External parts

Check for the existence of dirt or cracks on the battery case, top cover, vent plugs, and terminal posts. If necessary, clean with water and wipe with a dry cloth.
Apply a thin coat of grease on the terminal posts to prevent corrosion.

2) Electrolyte level

Check the electrolyte level in each cell. If the level is below MIN LEVEL, bring the level to MAX LEVEL by pouring distilled water into the battery cell. Do not fill beyond MAX LEVEL.

WARNING:

- **Electrolyte has toxicity; be careful handling the fluid.**
- **Avoid contact with skin, eyes or clothing. Especially at contact with eyes, blush with water for 15 minutes and get prompt medical attention.**
- **Batteries produce explosive gasses. Keep sparks, flame, cigarettes away.**
- **Ventilate when charging or using in enclosed space.**
- **For safety, in case an explosion does occur, wear eye protection or shield your eyes when working near any battery. Never lean over a battery.**
- **Do not let battery fluid contact eyes, skin, fabrics, or paint-work because battery fluid is corrosive acid.**
- **To lessen the risk of sparks, remove rings, metal watch-bands, and other metal jewelry. Never allow metal tools to contact the positive battery terminal and anything connected to it while you are at the same time in contact with any other metallic portion of the vehicle because a short circuit will be caused.**

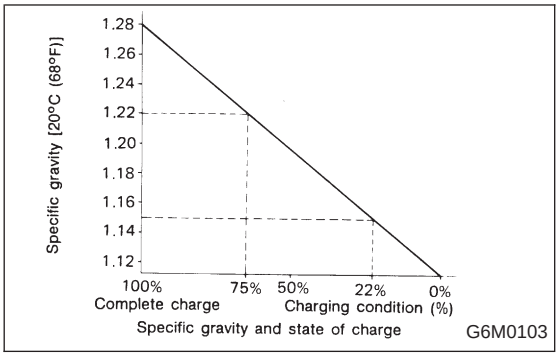

3) Specific gravity of electrolyte
Measure specific gravity of electrolyte using a hydrometer and a thermometer.
Specific gravity varies with temperature of electrolyte so that it must be corrected at 20°C (68°F) using the following equation:

S_{20} = St + 0.0007 x (t − 20)

S_{20}:Specific gravity corrected at electrolyte temperature of 20°C (68°F)
St :Measured specific gravity
t :Measured temperature °C

Determine whether or not battery must be charged, according to corrected specific gravity.
Standard specific gravity: 1.220 — 1.290 [at 20°C (68°F)]

Measuring the specific gravity of the electrolyte in the battery will disclose the state of charge of the battery. The relation between the specific gravity and the state of charge is as shown in figure.

C: CHARGING

WARNING:
- **Do not bring an open flame close to the battery at this time.**

CAUTION:
- **Prior to charging, corroded terminals should be cleaned with a brush and common baking soda solution.**
- **Be careful since battery electrolyte overflows while charging the battery.**
- **Observe instructions when handling battery charger.**
- **Before charging the battery on vehicle, disconnect battery ground terminal. Failure to follow this rule may damage generator's diodes or other electrical units.**

1. NORMAL CHARGING

Charge the battery at current value specified by manufacturer or at approximately 1/10 of battery's ampere hour rating.

2. QUICK CHARGING

Quick charging is a method in which the battery is charged in a short period of time with a relatively large current by using a quick charger.
Since a large current flow raises electrolyte temperature, the battery is subject to damage if the large current is used for prolonged time. For this reason, the quick charging must be carried out within a current range that will not increase the electrolyte temperature above 40°C (104°F).
It should be also remembered that the quick charging is a temporary means to bring battery voltage up to a fair value and, as a rule, a battery should be charged slowly with a low current.

CAUTION:
● Observe the items in 1. NORMAL CHARGING 6-2 [W2C1].
● Never use more than 10 amperes when charging the battery because that will shorten battery life.

3. JUDGMENT OF BATTERY IN CHARGED CONDITION

1) Specific gravity of electrolyte is held at a specific value in a range from 1.250 to 1.290 for more than one hour.
2) Voltage per battery cell is held at a specific value in a range from 2.5 to 2.8 volts for more than one hour.

4. CHECK HYDROMETER FOR STATE OF CHARGE

Hydrometer indicator	State of charge	Required action
Green dot	Above 65%	Load test
Dark dot	Below 65%	Charge battery
Clear dot	Low electrolyte	Replace battery.* (If cranking complaint)

*: Check electrical system before replacement.

3. Ignition Switch

A: REMOVAL AND INSTALLATION

1. IGNITION SWITCH

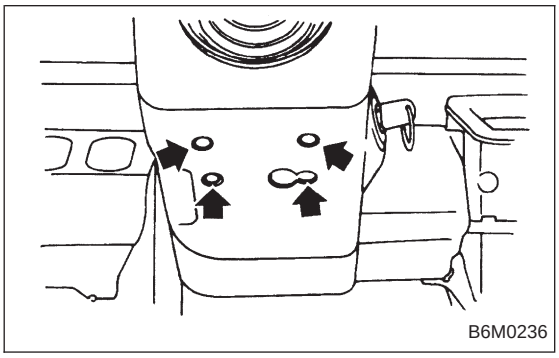

1) Remove screws, separate upper column cover and lower column cover.
2) Remove instrument panel lower cover.

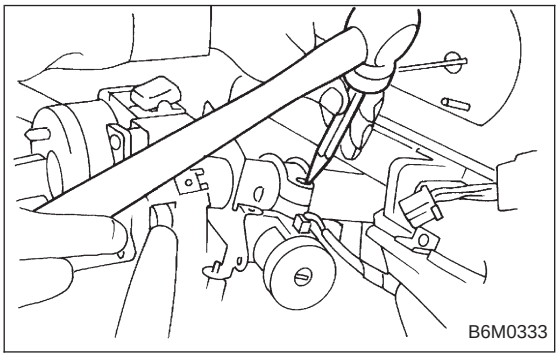

3) Disconnect ignition switch connector from body harness.
4) Using a drift and hammer, hit the torn bolt head to loosen and remove the ignition switch.

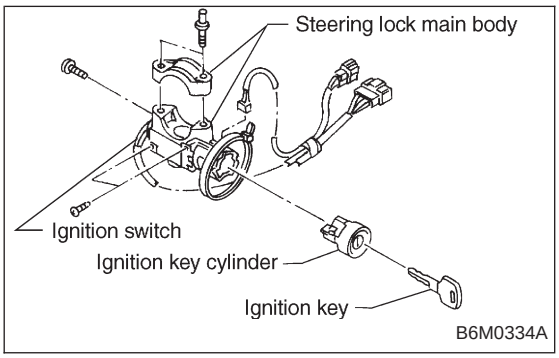

5) When installing, tighten the connecting bolt until its head twists off.