21. Cruise Control

A: ADJUSTMENT

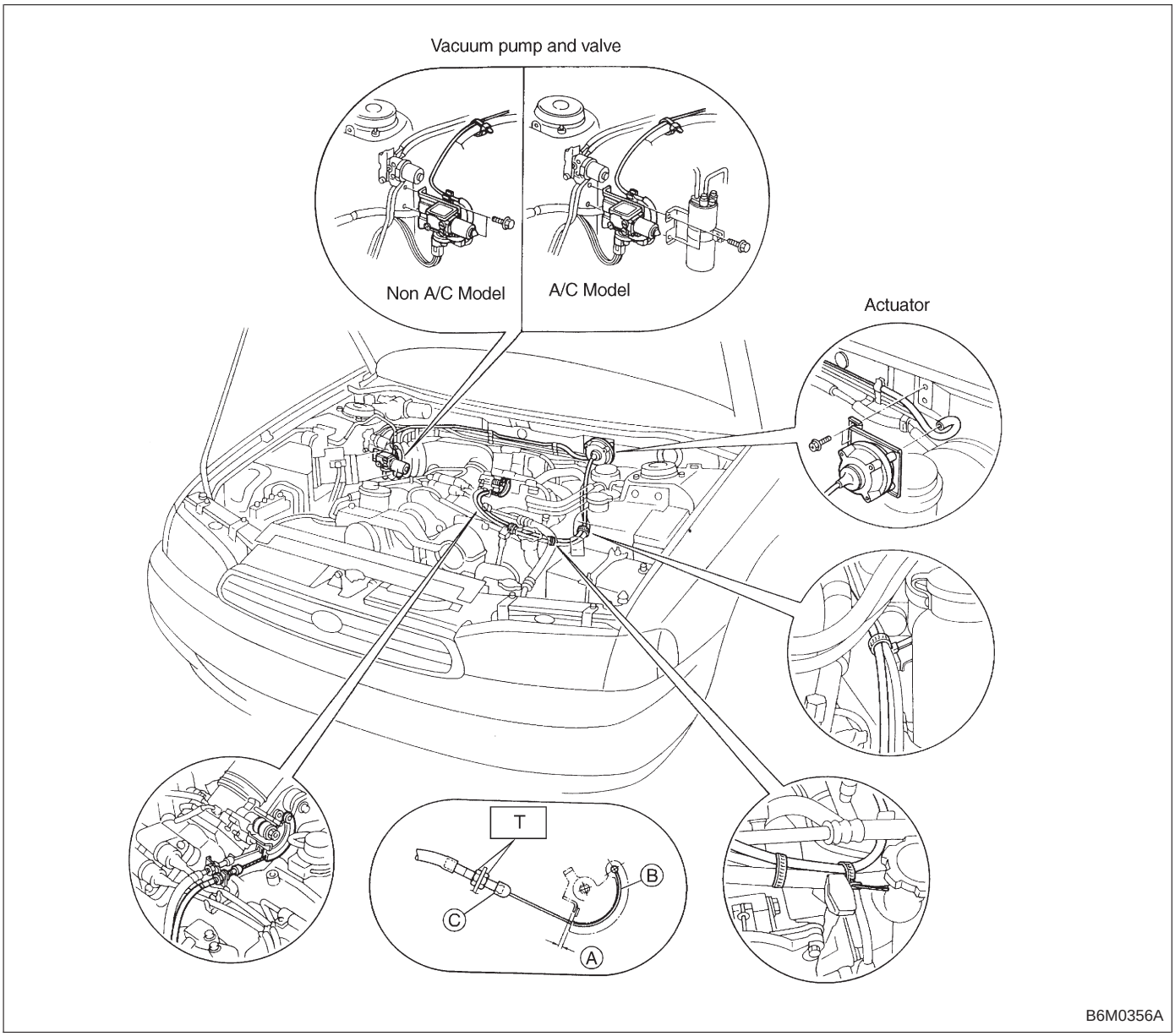

CAUTION:

Ⓐ: Must be adjusted when cable end outer is fixed in place, so that gap between throttle cam and lever is 1^{0}_{-1} mm ($0.04^{0}_{-0.04}$ in).
(Must be attached while throttle cam is being pulled by wire cable.)

Ⓑ: Must be coated evenly on cam end inner connection.

Ⓒ: Cover must be inserted securely, until tip of cable touches cover stopper.

Tightening torque: N·m (kg-m, ft-lb)
T: 6.4 — 11.3 (0.65 — 1.15, 4.7 — 8.3)

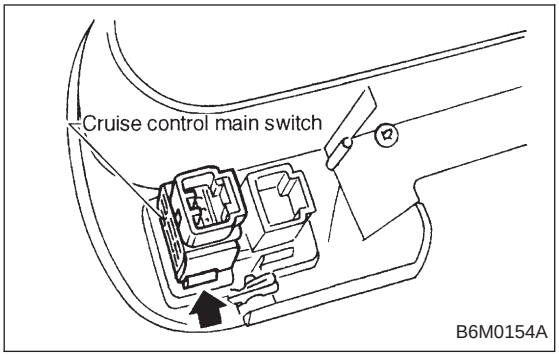

B: REMOVAL AND INSTALLATION

1. CRUISE CONTROL MAIN SWITCH

1) Remove screws which secure meter visor.
2) Remove meter visor from instrument panel while disconnecting connectors.
3) Remove cruise control main switch from meter visor.

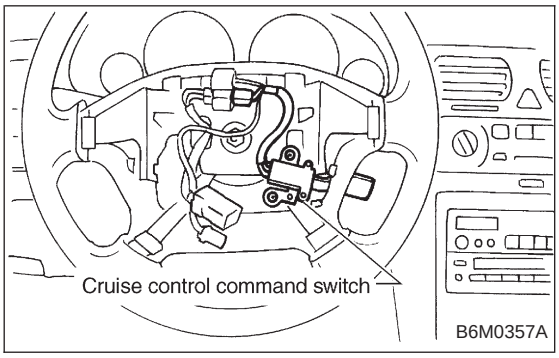

2. CRUISE CONTROL COMMAND SWITCH

1) Remove screw which secures horn pad to the base of steering wheel.
2) Remove horn pad from steering wheel while disconnecting connector.
3) Disconnect connector of cruise control command switch.
4) Remove screws which secure cruise control command switch to steering wheel, and then remove command switch.

WARNING:
Refer to 5-5 when removing or installing the module from the airbag equipped model.

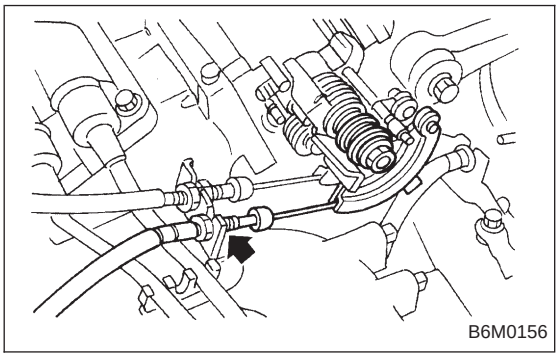

3. ACTUATOR

1) Loosen nut which secures cruise control cable end to throttle cam, and then remove cable from engine throttle cam.
2) Remove clip bands from cruise control cable.

CAUTION:
- **Be careful not to apply excessive load to the wire cable when adjusting and/or installing; otherwise, the actuator may be deformed or damaged.**
- **Do not bend cable sharply with a radius less than 100 mm (3.94 in); otherwise, cable may bend permanently, resulting in poor performance.**
- **When installing cable, be careful not to sharply bend or pinch the inner cable; otherwise, the cable may break.**

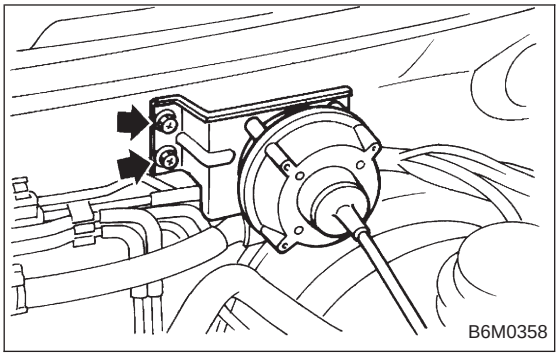

3) Remove nuts which secure actuator.
4) Remove actuator while disconnecting vacuum hose.

Tightening torque:
7.4±1.5 N·m (0.75±0.15 kg-m, 5.4±1.1 ft-lb)

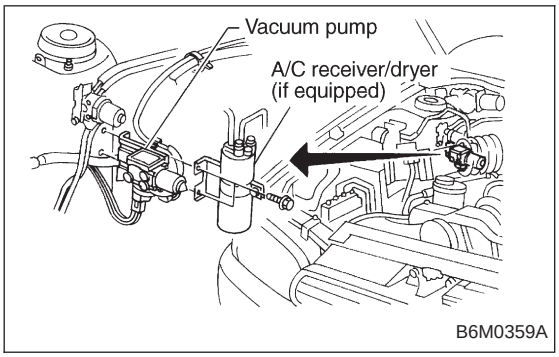

4. VACUUM PUMP AND VALVES

1) Disconnect connector from vacuum pump.
2) Remove bolts which secure vacuum pump.
3) Remove A/C receiver/drier bracket.
4) Remove vacuum pump while disconnecting vacuum hose.

Tightening torque:
7.4±1.5 N·m (0.75±0.15 kg-m, 5.4±1.1 ft-lb)

5. STOP AND BRAKE SWITCH

Refer to 4-5 [C101] (MT) or 4-5 [C201] (AT) as for removal and installation of stop and brake switch.

6. CLUTCH SWITCH (MT)

Refer to 4-5 [C101] as for removal and installation of clutch switch.

7. INHIBITOR SWITCH (AT)

Refer to 3-2 [W4A3] as for removal and installation of inhibitor switch.

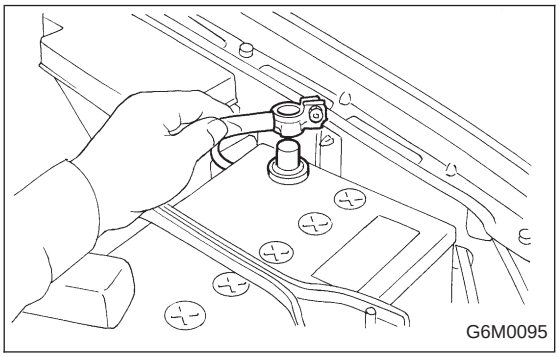

8. CRUISE CONTROL MODULE

1) Disconnect battery ground cable.

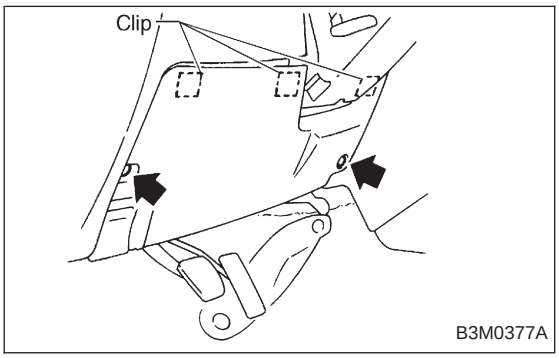

2) Remove lower cover and then disconnect connector.

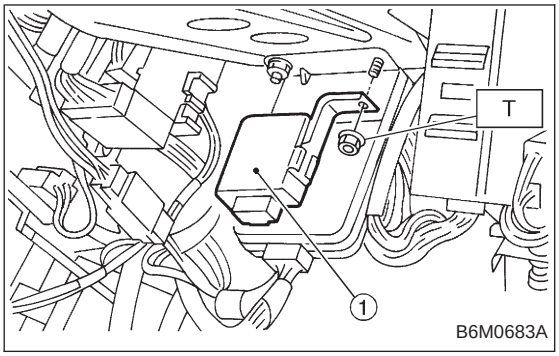

3) Remove door lock timer ① while disconnecting connector.

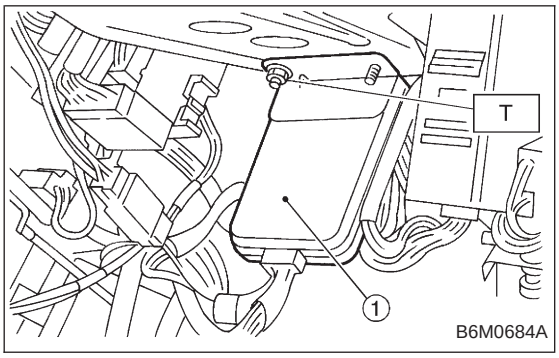

4) Remove cruise control module ① while disconnecting connector.
5) Installation is in the reverse order of removal.

Tightening torque:
7.4±2.5 N·m (0.75±0.25 kg-m, 5.4±1.8 ft-lb)

C: DRIVING TESTS

Conduct road tests by selecting a smooth, flat road or use free rollers as road test simulation.

1. MAIN SWITCH

1) Turn ignition switch ON.
2) Check that indicator light comes on when main switch is pressed (ON).
3) Check that indicator light goes out when main switch is pressed again (OFF).
4) Turn ignition switch OFF with main switch ON (which is indicated by illumination.).
5) Turn ignition switch ON again to ensure that indicator light remains OFF.

2. COMMAND SWITCH

1) Check that command switch is properly set in “SET/COAST”, “RESUME/ACCEL” or “CANCEL” mode.
2) Also check that command switch returns to the original position when released.

3. CONSTANT SPEED TEST

1) Turn main switch ON.
2) Drive vehicle at speed greater than 40 km/h (25 MPH).
3) Press command switch to set in “SET/COAST” mode.
4) Ensure that vehicle is maintained at the speed set when command switch was pressed.

4. ACCELERATION TEST

1) Set vehicle speed at speed greater than 40 km/h (25 MPH).
2) Ensure that vehicle continues to accelerate while holding command switch in RESUME/ACCEL mode, and that vehicle maintains that optional speed when command switch is released.

5. DECELERATION TEST

1) Set vehicle speed at optional speed greater than 40 km/h (25 MPH).
2) Ensure that vehicle continues to decelerate while holding command switch in SET/COAST mode, and that it maintains that optional speed when command switch is released.

NOTE:
When vehicle speed reaches the lower speed limit of 30 km/h (19 MPH) during deceleration, cruise control will be released.