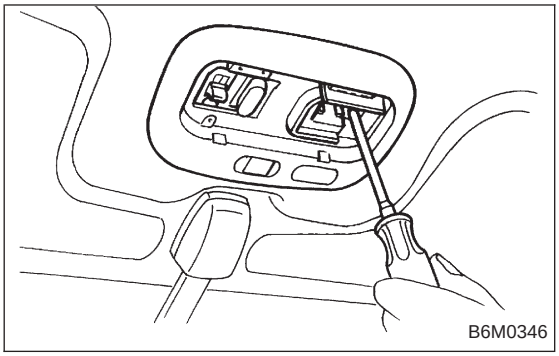

9. Spot Light

A: REMOVAL AND INSTALLATION

1. SPOT LIGHT AND SWITCH

1) Pry spot light lens off using a screwdriver.
2) Remove screws which secure spot light body.
3) Remove spot light body while disconnecting connector(s).

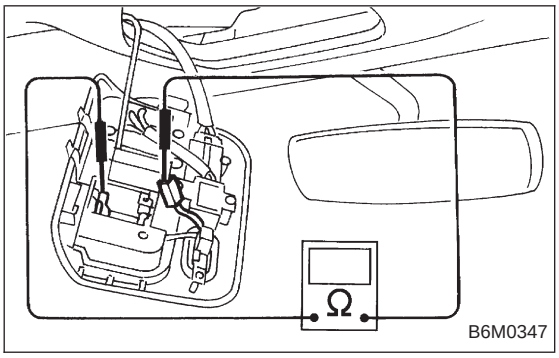

B: INSPECTION

1. SPOT LIGHT SWITCH

Move switch and check continuity between terminal of spot light switch connector and steel plate as shown.

Switch position	Connector terminal	Plate
Open (OFF)		
Push in (ON)	○	○

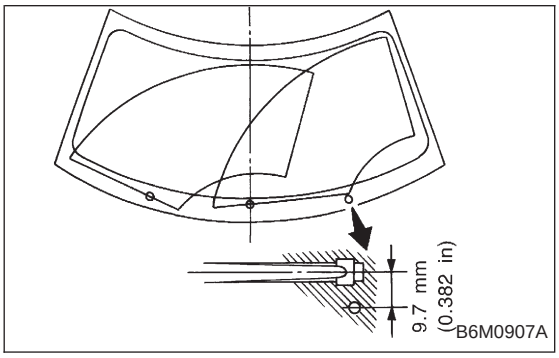

10. Front Wiper and Washer

A: ON-CAR SERVICES

1. ADJUSTMENT

1) Turn the wiper switch to OFF position.
2) Adjust blades in original position as shown in figure by changing wiper arm installation.

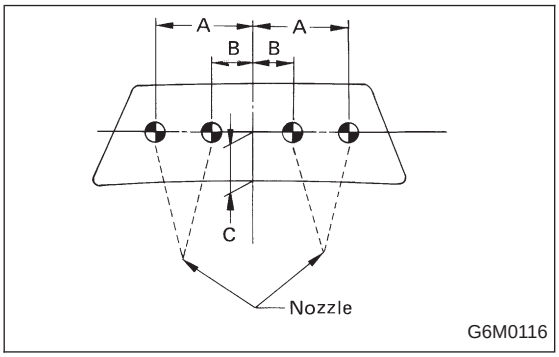

3) Stop the vehicle.
4) Adjust washer ejecting point on windshield glass as shown in figure.

Ejecting point:
A: 375 mm (14.76 in)
B: 150 mm (5.91 in)
C: 380 mm (14.96 in)

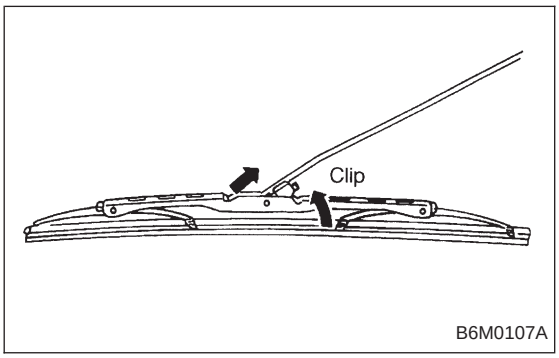

B: REMOVAL AND INSTALLATION

1. BLADE

Pull out blade following the arrow direction from arm while pushing up locking clip.

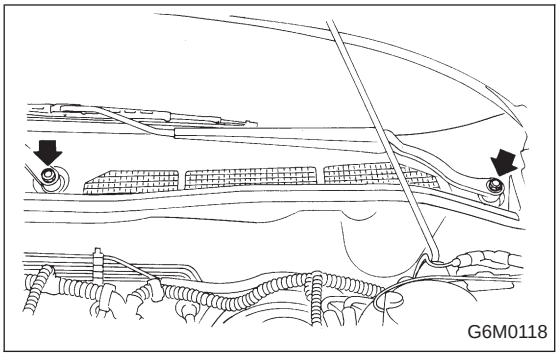

2. WIPER ARM

1) Open engine hood.
2) Remove cap of wiper arm installation nut.
3) Remove the nut which secures wiper arm.
4) Remove wiper arm.
5) Installation is in the reverse order of removal.

NOTE:
Remove metal sludge from the wiper arm fixture before installing it.

Tightening torque:
20±3 N·m (2.0±0.3 kg-m, 14.5±2.2 ft-lb)

3. WIPER MOTOR AND LINK

1) Detach weatherstrip and cowl panel. <Ref. to 5-1 [W10A0].>

NOTE:
Apply silicone oil or soap water to both sides of cowl net to facilitate removal.

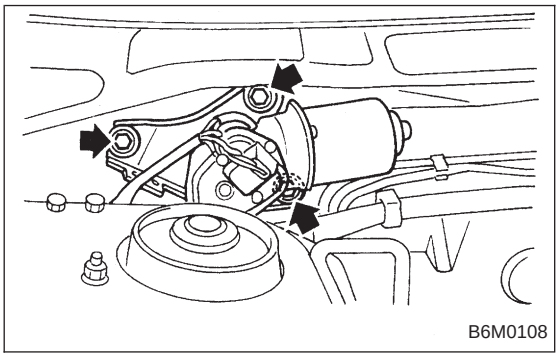

2) Disconnect connector of wiper motor.
3) Remove motor attaching bolts.

Tightening torque:
5.9±1.5 N·m (0.6±0.15 kg-m, 4.3±1.1 ft-lb)

4) Remove wiper link from back side of wiper motor using a screwdriver inserted into service hole in front panel.

CAUTION:
Do not pry wiper link off forcefully as this may scratch vehicle body.

5) Remove wiper motor.

6) Separate the driver's side wiper link from back side of the passenger's side wiper sleeve unit.

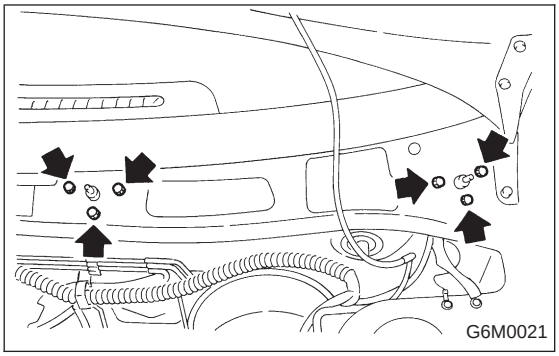

7) Remove nuts which secure sleeve unit.

Tightening torque:
5.9±1.5 N·m (0.6±0.15 kg-m, 4.3±1.1 ft-lb)

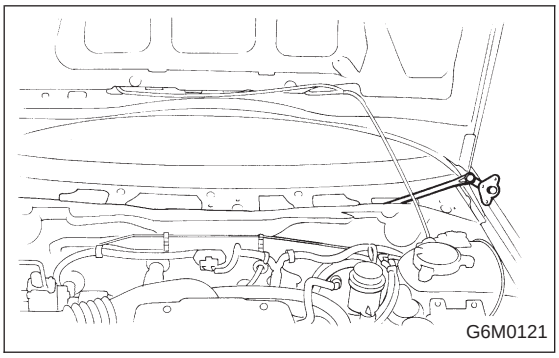

8) Remove wiper link from service hole in front panel.

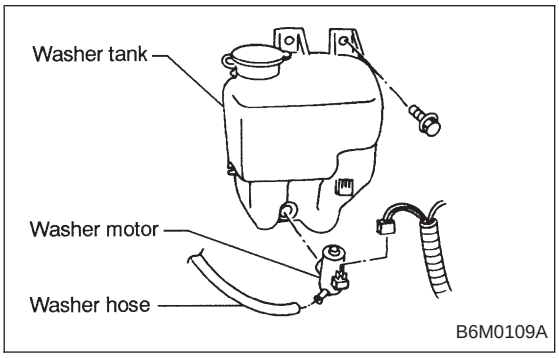

4. WASHER TANK AND WASHER MOTOR

1) Remove washer tank attaching bolts.
2) Disconnect connectors of washer motors.
3) Disconnect washer hoses from each washer motor.
4) Remove washer tank and washer motor as an unit.
5) Separate washer motor from washer tank.

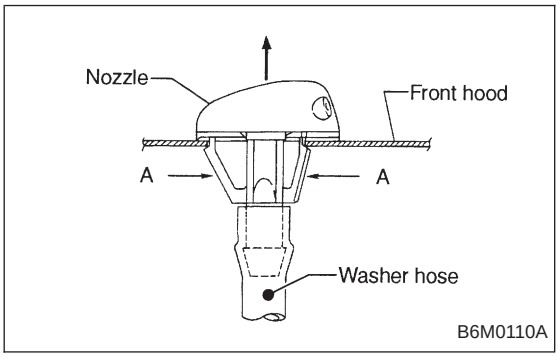

5. NOZZLE

1) Disconnect washer hose from nozzle.
2) Push nozzle clip in direction A as shown in figure.
3) Remove nozzle from engine hood.

CAUTION:
Do not pry nozzle off forcefully as this may scratch vehicle body.

6. COMBINATION SWITCH

Refer to 6-2 [W4B3] as for removal and installation of combination switch.

C: DISASSEMBLY AND ASSEMBLY

1. COMBINATION SWITCH AND INTERMITTENT UNIT

Refer to 6-2 [W4C1] as for disassembly and assembly of combination switch.

D: INSPECTION

1. COMBINATION SWITCH (ON-CAR)

1) Remove instrument panel lower cover.
2) Remove lower column cover.

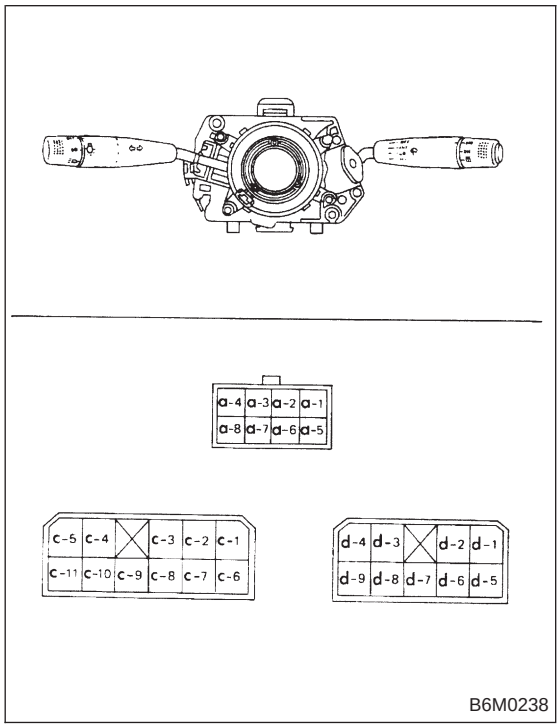

3) Unfasten holddown clip which secures harness, and disconnect connectors from body harness.
4) Set wiper switch to each position and check continuity between terminals as indicated in table below:

Wiper switch

Switch position \ Terminal		d-9	d-8	d-6	d-7	INT1	INT2
OFF	OFF	○	○				
	↕	x		x			
	MIST		○	○			
INT	OFF	○	○			○	○
	↕	x		x			
	MIST		○	○		○	○
	↕	x		x			
LO	OFF		○	○			
	MIST		○	○			
HI	OFF			○	○		
	MIST		○	○	○		

Washer switch

Switch position \ Terminal	d-5	d-2
OFF		
ON	○	○

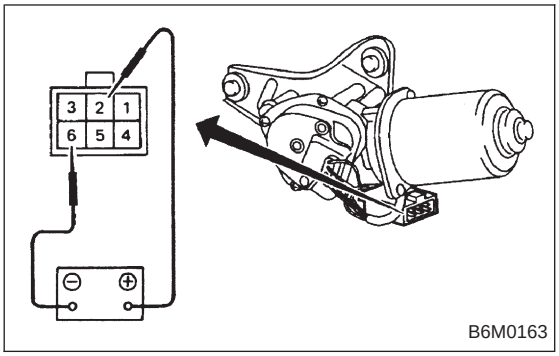

2. WIPER MOTOR

1) Check wiper motor operation at low speed.
Connect battery to wiper motor. Check wiper motor for proper operation at low speed.

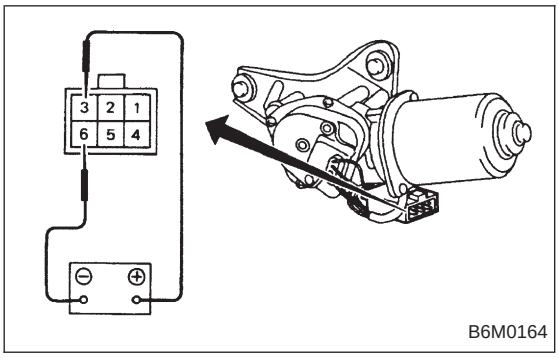

2) Check wiper motor operation at high speed.
Connect battery to wiper motor. Check wiper motor for proper operation at high speed.

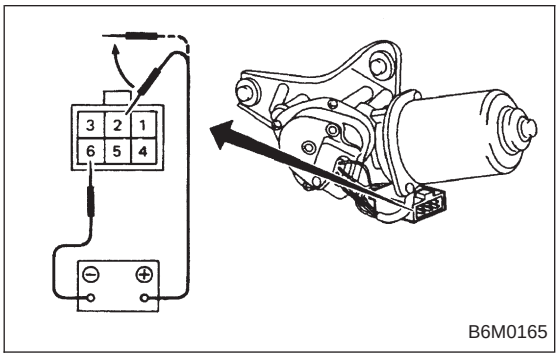

3) Check wiper motor for proper stoppage.
Connect battery to wiper motor. After operating wiper motor at low speed, disconnect battery to stop it.

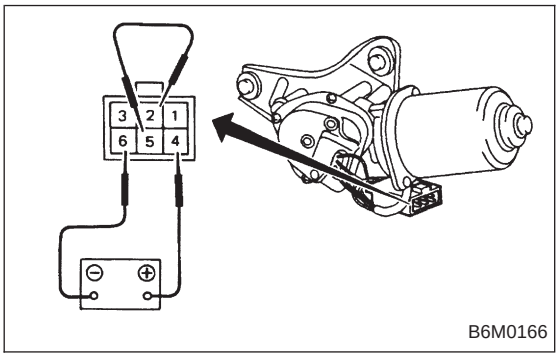

4) Reconnect battery and ensure that wiper motor stops at “AUTO STOP” after operating at low speed.

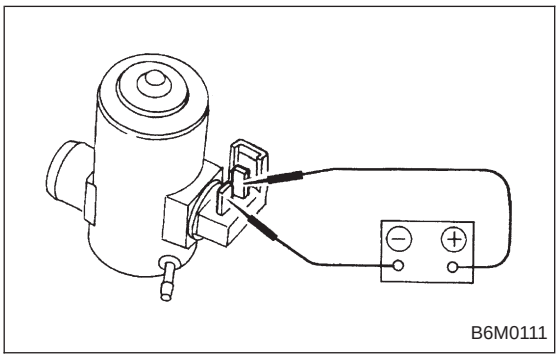

3. WASHER MOTOR

Apply battery voltage between terminals of washer motor connector and check that washer motor operates.