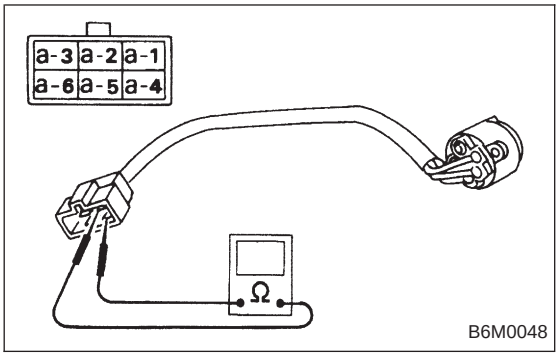

B: INSPECTION

1. IGNITION SWITCH (ON-CAR)

1) Remove instrument panel lower cover.
2) Remove lower column cover.
3) Unfasten holddown clip which secures harness, and disconnect connector of ignition switch from body harness.
4) Turn ignition key to each position and check continuity between terminals of ignition switch connector.

Terminal / Position	a-1	a-2	a-5	a-4
LOCK				
ACC	○	○		
ON	○	○	○	
START	○		○	○

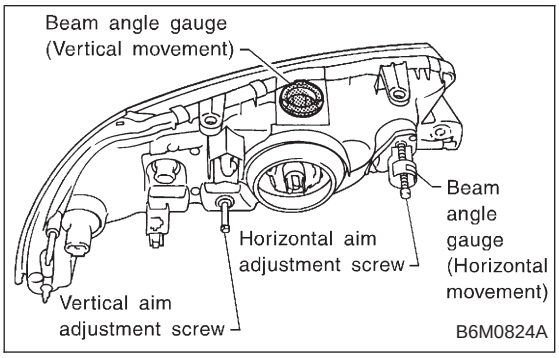

4. Headlight

A: ADJUSTMENT

1. HEADLIGHT AIMING

1) Adjust the headlight aiming by turning the adjusting screws.

CAUTION:
Before checking the headlight aiming, be sure of the following:
- **Turn off the light before adjusting headlight aiming. If the light is necessary to check aiming, do not turn on for more than two minutes.**
- **The area around the headlight has not sustained any accident, damage or other type of deformation.**
- **Vehicle is parked on level ground.**
- **The inflation pressure of tires is correct.**
- **Vehicle's gas tank is fully charged.**
- **Bounce the vehicle several times to normalize the suspension.**
- **Make certain that someone is seated in the driver's seat.**

NOTE:
Adjust vertical aim first, then horizontal aim.

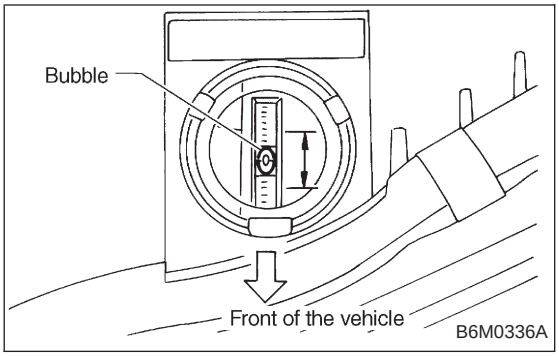

2) Look at the beam angle gauge (vertical movement). The bubble on the gauge should not deviate from the center of the gauge.

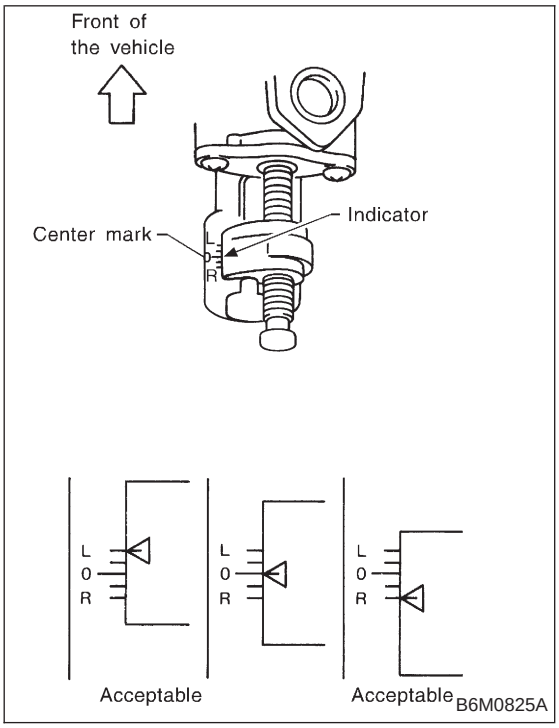

3) Look at the beam angle gauge (horizontal movement). The indicator should not deviate from the center of the gauge by more than two segments on either side of the gauge.

B: REMOVAL AND INSTALLATION

1. HEADLIGHT BULB

1) Disconnect the connector from inside of the engine compartment.
2) Remove rubber cap.
3) Remove the light bulb retaining spring to remove the bulb.
4) Replace the bulb with a new one and hook the spring.
5) Attach the rubber cap and connect the connector.

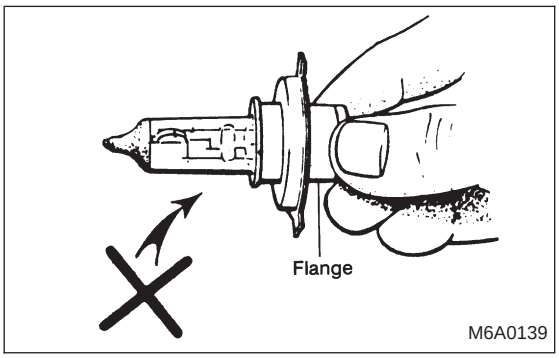

CAUTION:

- **Since the tungsten halogen bulb operates at high temperature, dirt and oil on the bulb surface decreases the bulb's useful life. When replacing the bulb, hold the flange portion and do not touch the glass portion.**

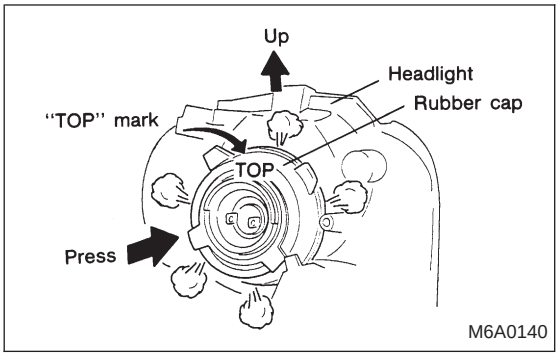

- **Attach the rubber cap with letters TOP on the top so that the drain hole will be on the lower side.**
- **To keep water out, correctly engage the groove portion of the rubber cap.**

2. HEADLIGHT

1) Remove front grille and disconnect connectors from headlight.

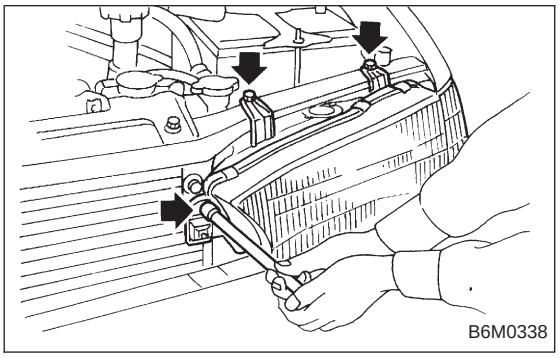

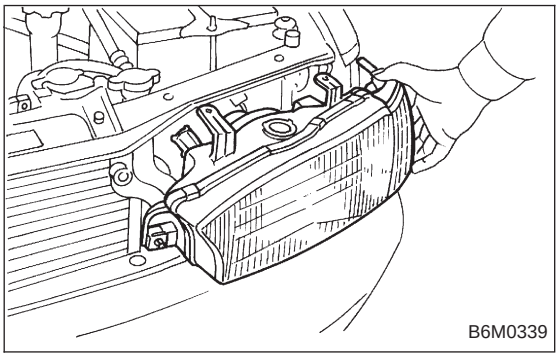

2) Remove bolts which secure headlight and remove headlight.

Tightening torque:
6.4±0.5 N·m (0.65±0.05 kg-m, 4.7±0.4 ft-lb)

NOTE:
When installing the headlight, securely fit clip into locating.

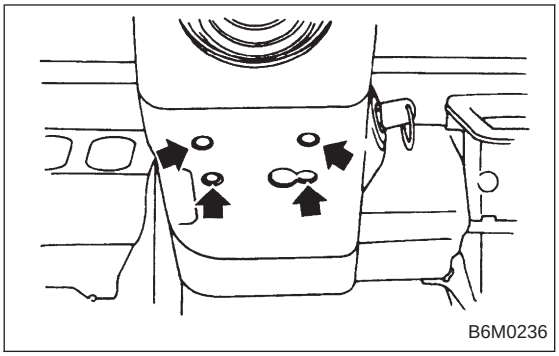
B6M0236

3. COMBINATION SWITCH (WITHOUT AIRBAG MODEL)

Refer to 5-5 [W7A0] as for removal of combination switch on airbag equipped model.

1) Remove steering wheel. <Ref. to 4-3 [W2A0].>
2) Remove screws which secure upper column cover to lower column cover.
3) Remove screws which secure knee protector and remove knee protector.

CAUTION:
When installing knee protector, ensure that harness is not caught by adjacent parts.

4) Disconnect connector from body harness and undo holddown band.

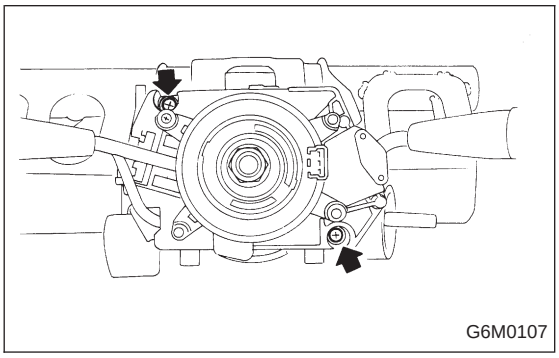
G6M0107

5) Remove screws which secure switch and remove switch.

CAUTION:
During installation (with key interlock)
- **When routing combination switch harness around steering system, do not place it over key interlock release knob.**
- **After installing lower column cover, ensure that key interlock release knob is accessible.**

C: DISASSEMBLY AND ASSEMBLY

1. COMBINATION SWITCH

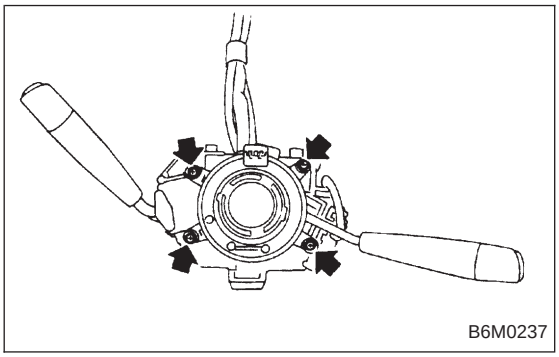
B6M0237

1) Remove screws which secure slip ring to combination switch, and remove slip ring.

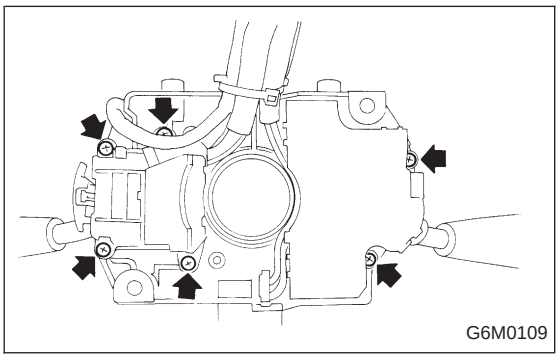
G6M0109

2) Remove screws which secure lighting switch, wiper and washer switch. Remove both switches.

Assembly is in the reverse order of disassembly.

D: INSPECTION

1. COMBINATION SWITCH (ON-CAR)

1) Remove instrument panel lower cover.
2) Remove lower column cover.

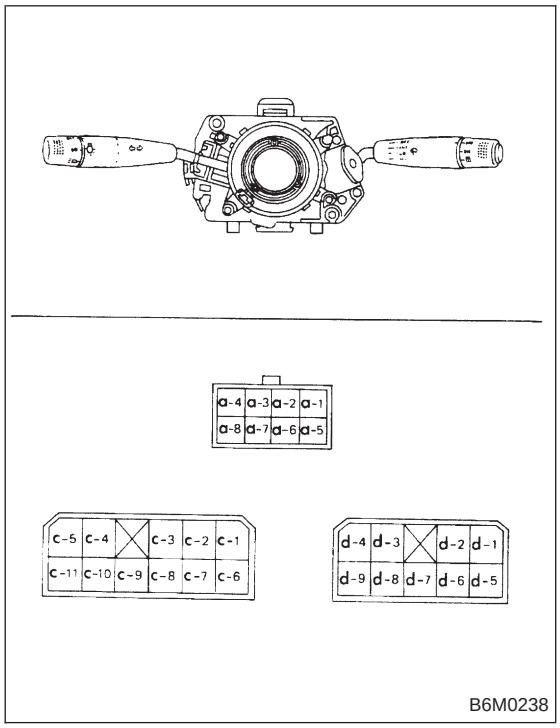

3) Unfasten holddown clip which secures harness, and disconnect connectors from body harness.

4) Move combination switch to respective positions and check continuity between terminals as indicated in the following tables:

Lighting switch

Terminal / Switch position	c-1	c-2	c-3
OFF			
Tail	○	○	
↕	○	○	
Head	○	○	○

Parking switch

Terminal / Switch position	c-10	c-11	c-9
OFF	○	○	
↕	X		X
ON		○	○

Dimmer and passing switch

Terminal / Switch position	a-3	a-2	a-1	a-4
Flash	○		○	○
↕	○	○	○	
Low beam	○	○		
↕	○	○	○	
HI-beam	○		○	

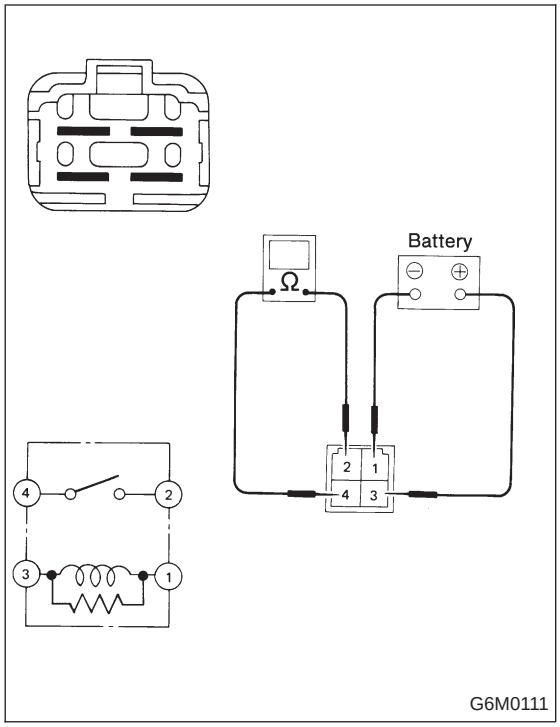

2. HEADLIGHT RELAY

Check continuity between terminals as indicated in table below, when connecting the battery to terminal No. 1 and No. 3.

When current flows.	Between terminals No. 2 and No. 4	Continuity exists.
When current does not flow.	Between terminals No. 2 and No. 4	Continuity does not exist.
	Between terminals No. 1 and No. 3	Continuity exists.

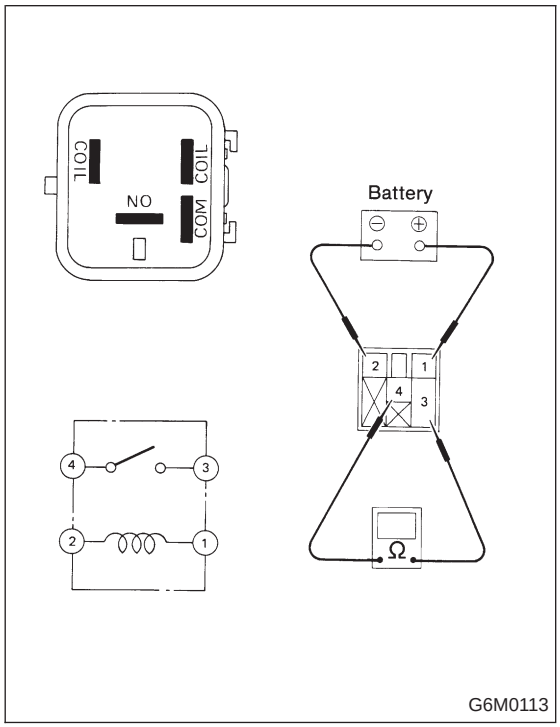

3. DAYTIME RUNNING LIGHT RELAY

Check continuity between terminals (indicated in table below) when terminal No. 1 is connected to battery and terminal No. 2 is grounded.

When current flows.	Between terminals No. 3 and No. 4	Continuity exists.
When current does not flow.	Between terminals No. 3 and No. 4	Continuity does not exist.
	Between terminals No. 1 and No. 2	Continuity exists.

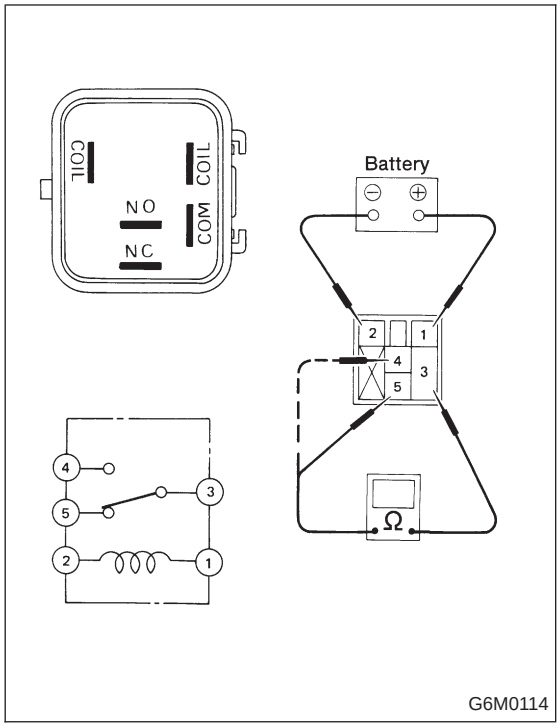

Check continuity between terminals (indicated in table below) when terminal No. 1 is connected to battery and terminal No. 2 is grounded.

When current flows.	Between terminals No. 3 and No. 5	Continuity does not exist.
	Between terminals No. 3 and No. 4	Continuity exists.
When current does not flow.	Between terminals No. 3 and No. 5	Continuity exists.
	Between terminals No. 3 and No. 4	Continuity does not exist.
	Between terminals No. 1 and No. 2	Continuity exists.