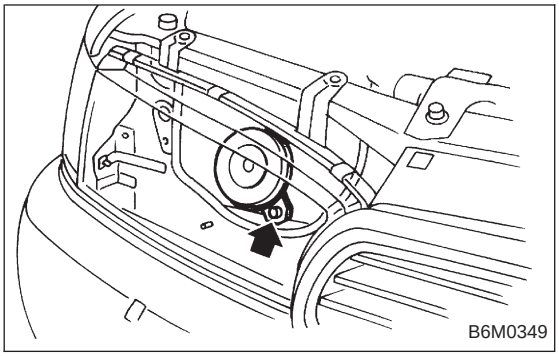

15. Horn and Cigarette Lighter

A: REMOVAL AND INSTALLATION

1. HORN

1) Open the engine hood.
2) Disconnect connector of horn.
3) Remove the horn.

Tightening torque:
18±5 N·m (1.8±0.5 kg-m, 13.0±3.6 ft-lb)

CAUTION:
After installing horn, connect connector, fit firmly wiring harness to prevent from disconnecting due to vibration.

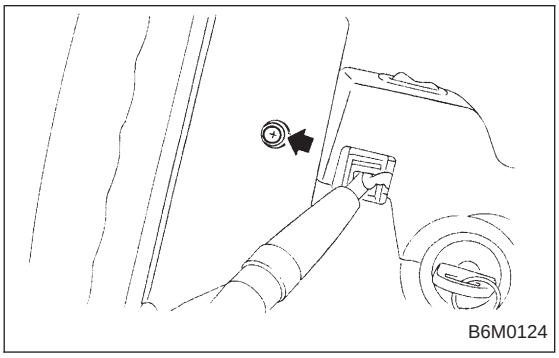

2. HORN SWITCH (HORN PAD)

1) Remove screw which secures horn switch (steering pad) to the base of steering wheel.
2) Remove horn switch (steering pad) from steering wheel while disconnecting connector.

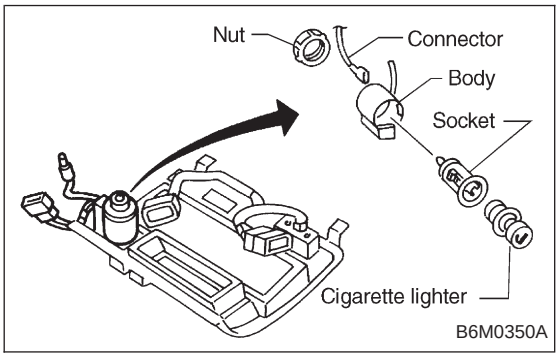

3. CIGARETTE LIGHTER

1) Remove center panel from instrument panel. <Ref. to 5-4 [W1A0].>
2) Disconnect connector from cigarette lighter.
3) Turn illumination socket 45° counterclockwise and remove it.
4) Loosen nut, and then remove cigarette lighter body.

CAUTION:
- **Align socket with cutout portion of instrument panel during installation.**
- **In case of replacing cigarette lighter, use genuine part only and always replace both plug and socket combination.**

B: INSPECTION

1. HORN SWITCH

Ensure that horn switch is free from the following defects:
1) Burned or shorted contacts
2) Broken or weak spring
3) Damaged harness
4) Worn or corroded mating surface of horn plate

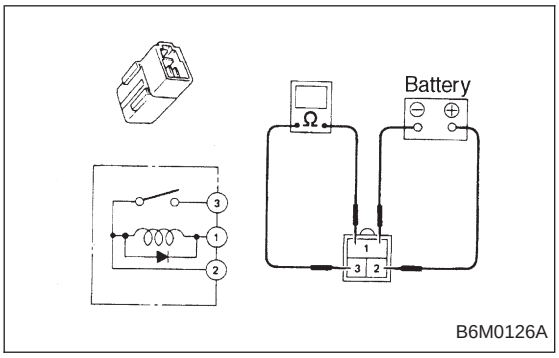

B6M0126A

2. HORN RELAY

Check continuity between terminals as indicated in table below, when connecting the battery to terminals No. 1 and No. 2.

When current flows.	Between terminals No. 2 and No. 3	Continuity exists.
When current does not flow.	Between terminals No. 2 and No. 3	Continuity does not exist.
	Between terminals No. 1 and No. 2	Continuity exists.

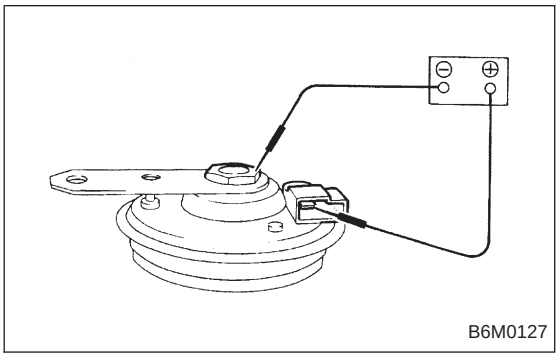
B6M0127

3. HORN

Make sure that horn sounds when battery voltage is applied between connector terminal and horn body.

4. CIGARETTE LIGHTER

1) Remove plug. Then, check element's contact for wear, and element for accumulation of ashes, foreign particles, etc.
2) Check element for discontinuity.
3) Remove socket and clean element. Then, check for wear or foreign particles on element's contact and mating surface.
4) Ensure that cigarette lighter returns within 20 seconds after it is turned to ON.

16. Power Window

A: REMOVAL AND INSTALLATION

1. MAIN SWITCH, SUB SWITCH AND POWER WINDOW MOTOR

Refer to 5-2 [W2A2] as for removal and installation of power window main switch, sub switch and motor.

NOTE:
To remove the power window motor, it is necessary to disassemble the door component parts.