CAUTION:
● Observe the items in 1. NORMAL CHARGING 6-2 [W2C1].
● Never use more than 10 amperes when charging the battery because that will shorten battery life.

3. JUDGMENT OF BATTERY IN CHARGED CONDITION

1) Specific gravity of electrolyte is held at a specific value in a range from 1.250 to 1.290 for more than one hour.
2) Voltage per battery cell is held at a specific value in a range from 2.5 to 2.8 volts for more than one hour.

4. CHECK HYDROMETER FOR STATE OF CHARGE

Hydrometer indicator	State of charge	Required action
Green dot	Above 65%	Load test
Dark dot	Below 65%	Charge battery
Clear dot	Low electrolyte	Replace battery.* (If cranking complaint)

*: Check electrical system before replacement.

3. Ignition Switch

A: REMOVAL AND INSTALLATION

1. IGNITION SWITCH

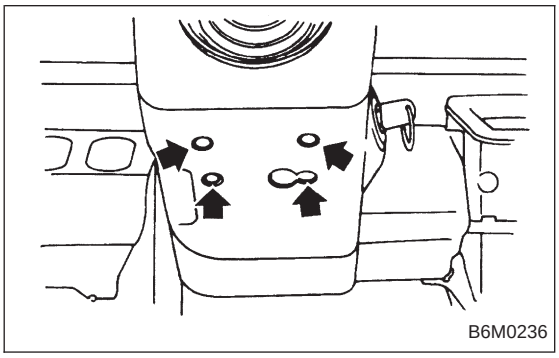

1) Remove screws, separate upper column cover and lower column cover.
2) Remove instrument panel lower cover.

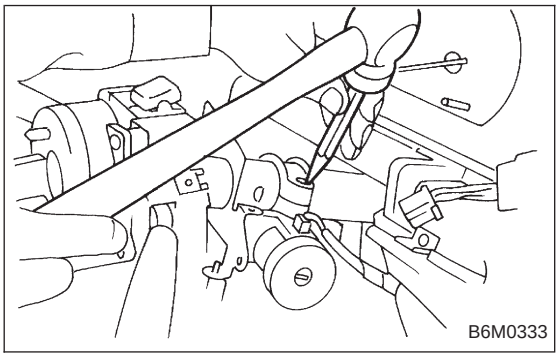

3) Disconnect ignition switch connector from body harness.
4) Using a drift and hammer, hit the torn bolt head to loosen and remove the ignition switch.

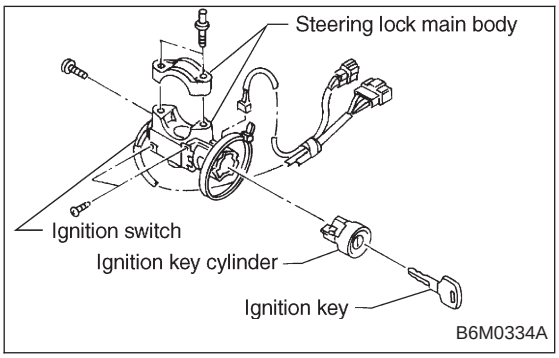

5) When installing, tighten the connecting bolt until its head twists off.

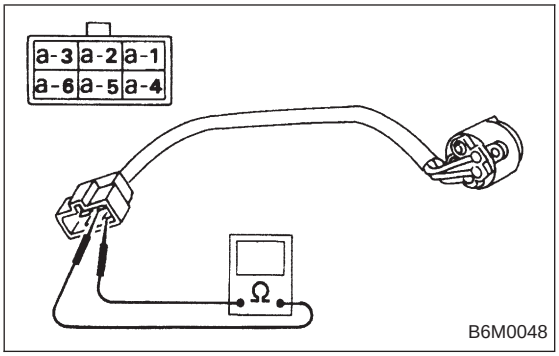

B: INSPECTION

1. IGNITION SWITCH (ON-CAR)

1) Remove instrument panel lower cover.
2) Remove lower column cover.
3) Unfasten holddown clip which secures harness, and disconnect connector of ignition switch from body harness.
4) Turn ignition key to each position and check continuity between terminals of ignition switch connector.

Terminal / Position	a-1	a-2	a-5	a-4
LOCK				
ACC	○	○		
ON	○	○	○	
START	○		○	○

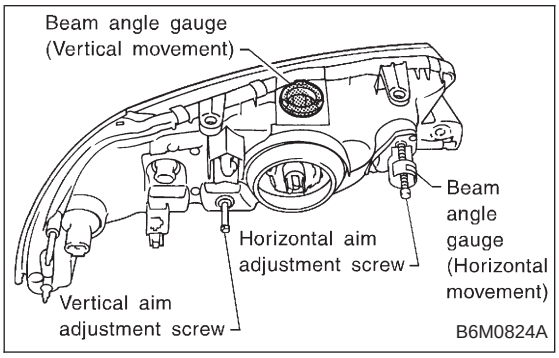

4. Headlight

A: ADJUSTMENT

1. HEADLIGHT AIMING

1) Adjust the headlight aiming by turning the adjusting screws.

CAUTION:
Before checking the headlight aiming, be sure of the following:
- **Turn off the light before adjusting headlight aiming. If the light is necessary to check aiming, do not turn on for more than two minutes.**
- **The area around the headlight has not sustained any accident, damage or other type of deformation.**
- **Vehicle is parked on level ground.**
- **The inflation pressure of tires is correct.**
- **Vehicle's gas tank is fully charged.**
- **Bounce the vehicle several times to normalize the suspension.**
- **Make certain that someone is seated in the driver's seat.**

NOTE:
Adjust vertical aim first, then horizontal aim.