17. Power Door Lock

A: REMOVAL AND INSTALLATION

1. FRONT AND REAR DOOR, AND REAR GATE LOCK ACTUATOR

Refer to 5-2 [W2A7] as for removal and installation of front door lock actuator, rear door lock actuators, and rear gate lock actuator.

NOTE:
To remove and install the actuators, it is necessary to disassemble the door component parts.

2. DOOR LOCK TIMER

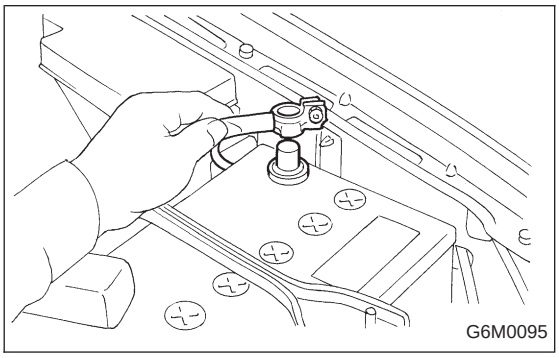

1) Disconnect battery ground cable.

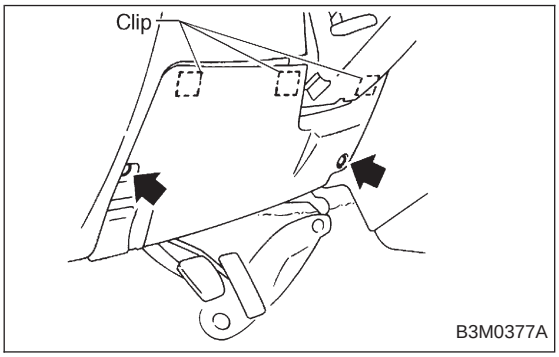

2) Remove lower cover and then disconnect connector.

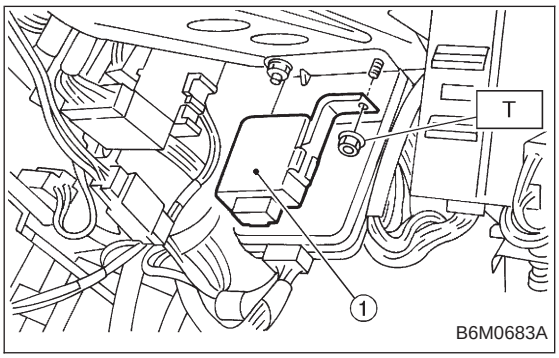

3) Remove door lock timer ① while disconnecting connector.
4) Installation is in the reverse order of removal.

Tightening torque:
T: 7.4±2.5 N·m (0.75±0.25 kg-m, 5.4±1.8 ft-lb)

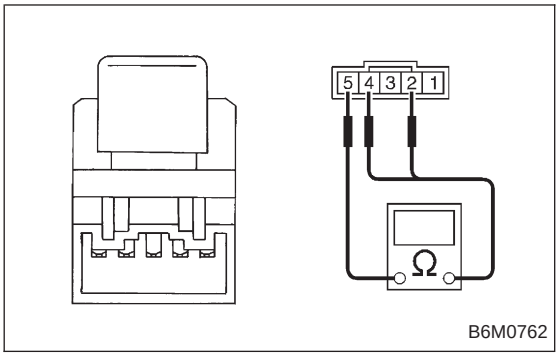

B: INSPECTION

1. DOOR LOCK SWITCH (DRIVER'S AND FRONT PASSENGER'S DOOR)

1) Remove door trim panel. <Ref. to 5-2 [W2A2].>
2) Set switch to each position and check continuity between terminals as indicated in table below:

Terminal / Switch position	5	4	2
UNLOCK	○	○	
LOCK	○		○

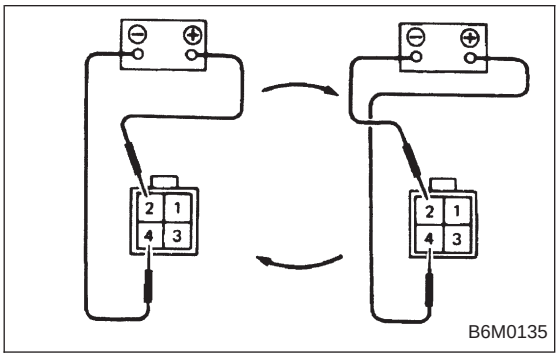

2. ACTUATOR

1) Remove door trim panel. <Ref. to 5-2 [W2A2].>
2) Disconnect connector of actuator.
3) Make sure that door link moves to LOCK or UNLOCK position when battery voltage is applied between terminals as described below:
- Connect battery positive (+) terminal to terminal No. 2, and negative (−) terminal to terminal No. 4 at a moment.
- Connect battery positive (+) terminal to terminal No. 4, and negative terminal (−) to terminal No. 2 at a moment.

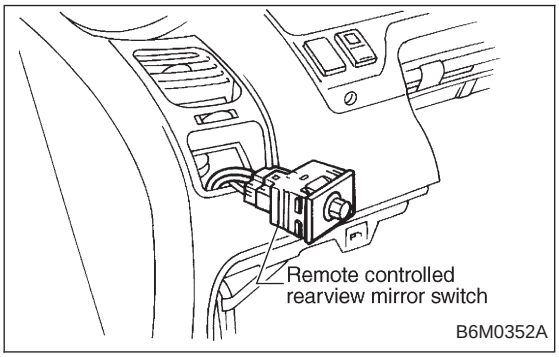

18. Remote Controlled Rearview Mirror

A: REMOVAL AND INSTALLATION

1. REMOTE CONTROLLED REARVIEW MIRROR SWITCH

1) Remove rearview mirror switch from instrument panel by using a small standard screwdriver.

CAUTION:
Do not pry rearview mirror switch forcefully as this may scratch instrument panel.

2) Remove rearview mirror switch while disconnecting connector.