B: INSPECTION

1. HORN SWITCH

Ensure that horn switch is free from the following defects:
1) Burned or shorted contacts
2) Broken or weak spring
3) Damaged harness
4) Worn or corroded mating surface of horn plate

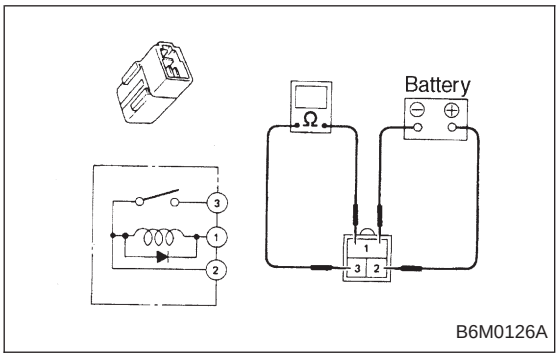

B6M0126A

2. HORN RELAY

Check continuity between terminals as indicated in table below, when connecting the battery to terminals No. 1 and No. 2.

When current flows.	Between terminals No. 2 and No. 3	Continuity exists.
When current does not flow.	Between terminals No. 2 and No. 3	Continuity does not exist.
	Between terminals No. 1 and No. 2	Continuity exists.

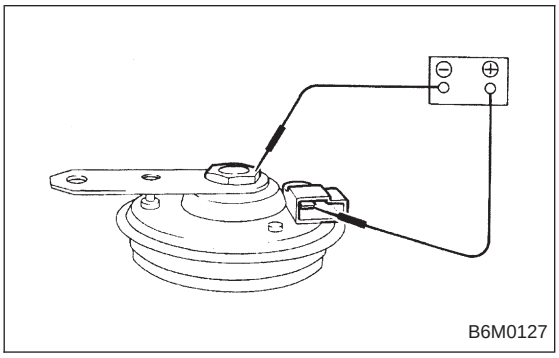
B6M0127

3. HORN

Make sure that horn sounds when battery voltage is applied between connector terminal and horn body.

4. CIGARETTE LIGHTER

1) Remove plug. Then, check element's contact for wear, and element for accumulation of ashes, foreign particles, etc.
2) Check element for discontinuity.
3) Remove socket and clean element. Then, check for wear or foreign particles on element's contact and mating surface.
4) Ensure that cigarette lighter returns within 20 seconds after it is turned to ON.

16. Power Window

A: REMOVAL AND INSTALLATION

1. MAIN SWITCH, SUB SWITCH AND POWER WINDOW MOTOR

Refer to 5-2 [W2A2] as for removal and installation of power window main switch, sub switch and motor.

NOTE:
To remove the power window motor, it is necessary to disassemble the door component parts.

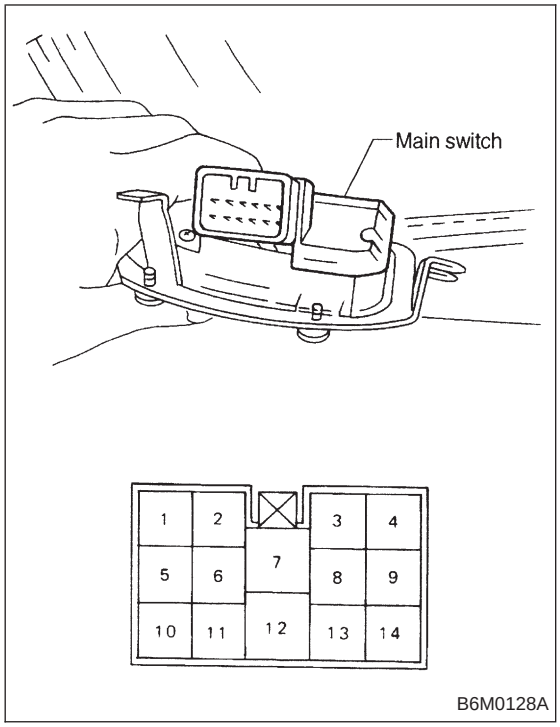

B: INSPECTION

1. MAIN SWITCH

Set power window main switch to each position and check continuity between terminals as indicated in table below:

LHD model

Window lock switch	Switch / Position	Front RH				Front LH				Rear RH				Rear LH			
		7	14	9	12	7	13	8	12	7	6	11	12	7	10	5	12
NORMAL	UP	○	○	○	○	○	○	○	○	○	○	○	○	○	○	○	○
	OFF		○	○	○		○	○	○		○	○	○		○	○	○
	DOWN	○		○		○		○		○		○		○		○	
			○		○		○		○		○		○		○		○
LOCK	UP	○	○			○	○	○	○	○	○			○	○		
	OFF		○	○			○	○	○		○	○			○	○	
	DOWN	○		○		○		○		○		○		○		○	
							○		○								

RHD model

Window lock switch	Switch / Position	Front RH				Front LH				Rear RH				Rear LH			
		7	11	6	12	7	10	5	12	7	9	14	12	7	13	8	12
AUTO UP		○	○	○	○												
UP		○	○	○	○	○	○	○	○	○	○	○	○	○	○	○	○
OFF			○	○	○		○	○	○		○	○	○		○	○	○
DOWN		○		○		○		○		○		○		○		○	
			○		○		○		○		○		○		○		○
AUTO DOWN		○		○													
			○		○												

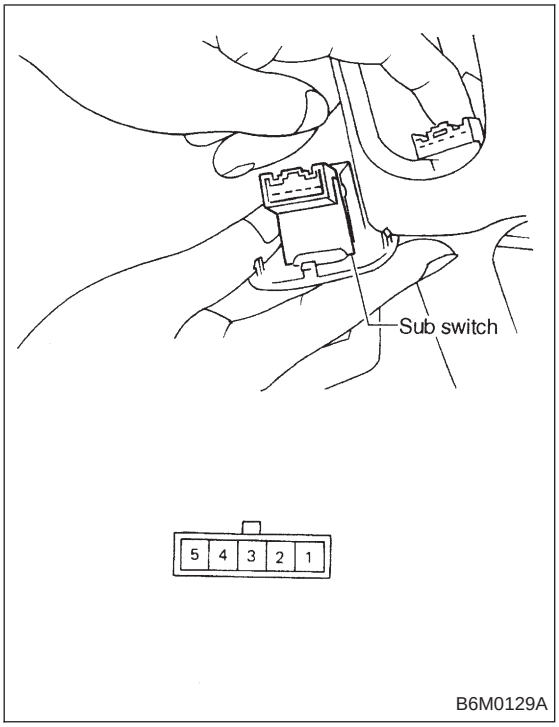

2. SUB SWITCH

Set power window sub switch to each position and check continuity between terminals as indicated in table below:

Terminal / Switch position	5	1	3	4	2
UP	○		○	○	○
↕					
OFF		○	○	○	○
↕					
DOWN	○	○		○	○

3. POWER WINDOW MOTOR

1) Make sure that power window motor rotates properly when battery voltage is applied to terminals of motor connector.
2) Change polarity of battery connections to terminals to ensure that motor rotates in reverse direction.

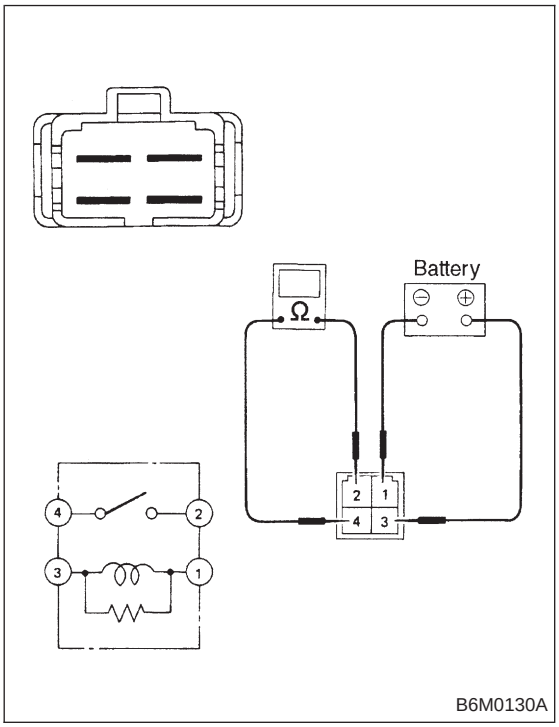

4. POWER WINDOW RELAY

Check continuity between terminals as indicated in table below, when connecting the battery to terminal No. 1 and No. 3.

When current flows.	Between terminals No. 2 and No. 4	Continuity exists.
When current does not flow.	Between terminals No. 2 and No. 4	Continuity does not exist.
	Between terminals No. 1 and No. 3	Continuity exists.