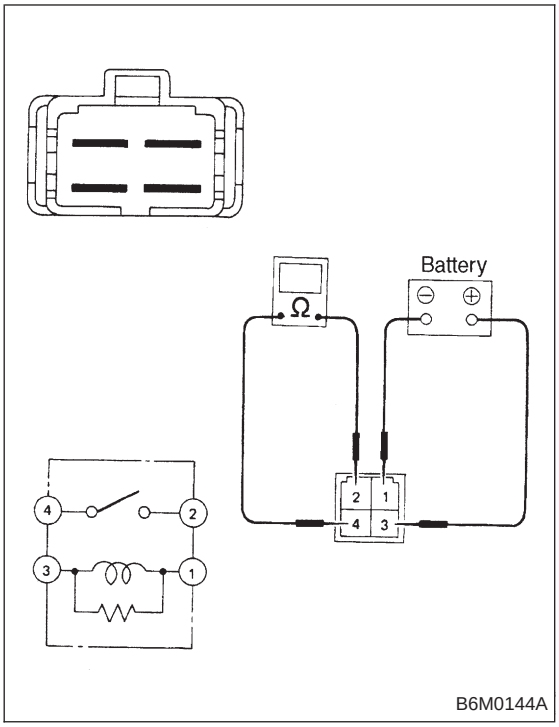

B6M0144A

3. SUNROOF RELAY

Check continuity between terminals as indicated in table below, when battery voltage is applied between terminals No. 1 and No. 3.

When current flows.	Between terminals No. 2 and No. 4	Continuity exists.
When current does not flow.	Between terminals No. 2 and No. 4	Continuity does not exist.
	Between terminals No. 1 and No. 3	Continuity exists.

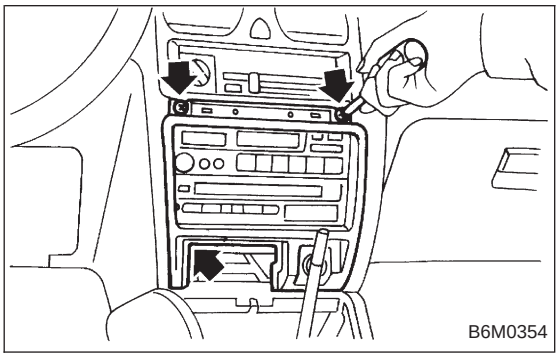
B6M0354

20. Radio, Speaker and Antenna

A: REMOVAL AND INSTALLATION

1. RADIO BODY

1) Remove hand brake cover.
2) Remove console cover.
3) Remove screws which secure center panel. Remove center panel.

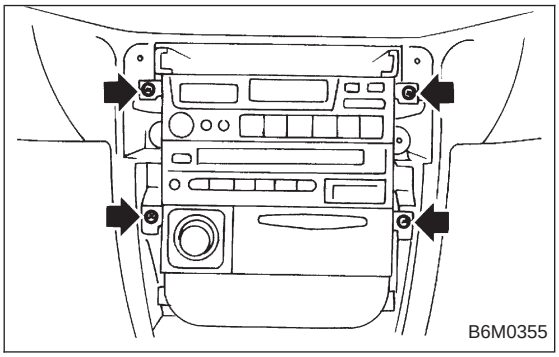
B6M0355

4) Remove fitting screws, and slightly pull radio out of instrument panel.
5) Disconnect connectors and antenna feeder cord.

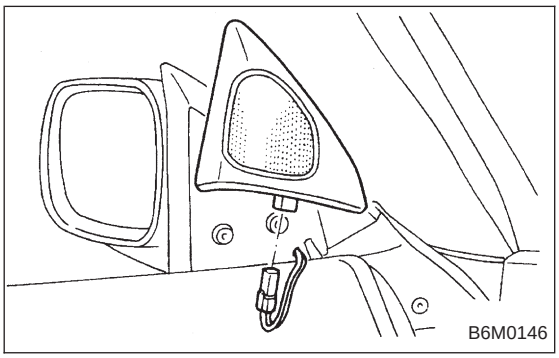
B6M0146

2. FRONT SPEAKER

1) Remove gusset speaker from behind the rearview mirror while disconnecting connector.
2) Remove door trim panel. <Ref. to 5-2 [W2A2].>

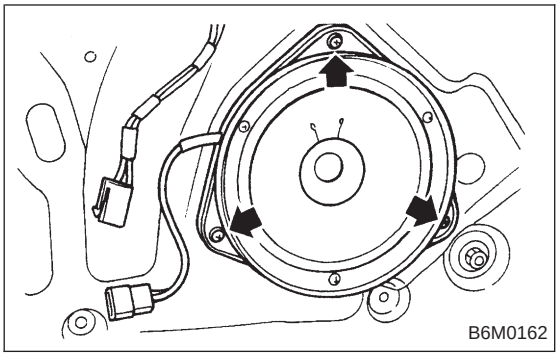

3) Disconnect connector from speaker.
4) Remove screws which secure the speaker.
5) Remove door mount speaker.

3. REAR SPEAKER (SEDAN)

1) Remove rear seat cushion and rear backrest.
2) Remove left and right rear quarter trim panels.
3) Remove rear shelf trim panel.
4) Remove screws which secure speaker.
5) Remove speaker while disconnecting connector from speaker.

4. REAR SPEAKER (WAGON)

1) Remove door trim panel. <Ref. to 5-2 [W2A2].>
2) Disconnect connector from speaker.
3) Remove screws which secure the speaker.
4) Remove speaker.

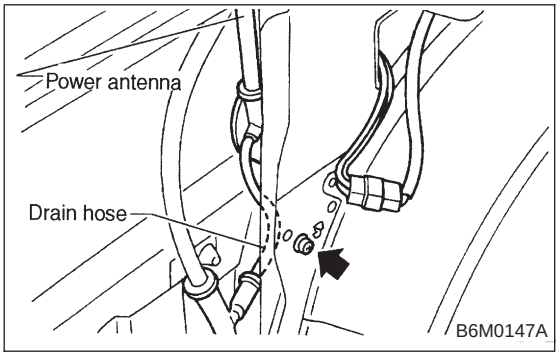

5. POWER ANTENNA

1) Remove left side trunk trim (SEDAN), or left side rear lower quarter trim (WAGON).
2) Remove special nut (SEDAN).
3) Remove bolt which secures power antenna.
4) Remove power antenna while disconnecting connector and water drain hose.

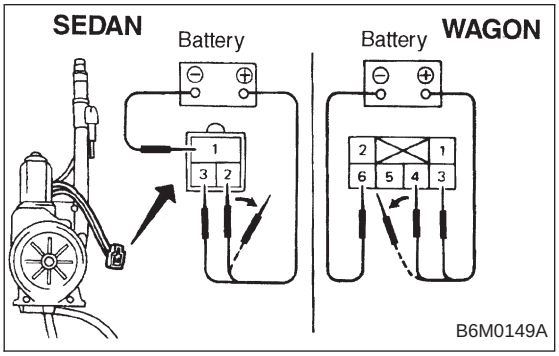

B: INSPECTION

1. POWER ANTENNA

1) Connect battery positive (+) terminal to terminal No. 3 and connect terminal No. 1 (SEDAN) or No. 6 (WAGON) to ground. Ensure that antenna rod extends properly when battery positive (+) terminal is connected to terminal No. 2 (SEDAN) or No. 4 (WAGON).
2) Ensure that antenna rod retracts properly when battery positive (+) terminal is disconnected from terminal No. 2 (SEDAN) or No. 4 (WAGON).