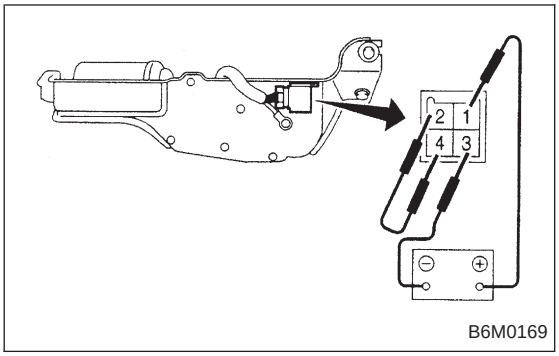

3) Reconnect battery and ensure that wiper motor stops at “AUTO STOP” after it has been operated.

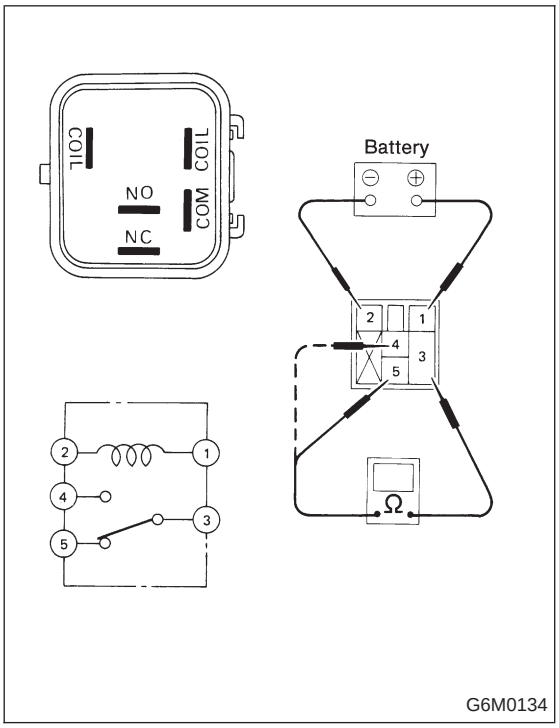

3. REAR WIPER RELAY

1) Connect battery to terminal No. 1 and ground terminal No. 2.
2) Check continuity between terminals as indicated in table below:

When current flows.	Between terminals No. 3 and No. 5	Continuity does not exist.
	Between terminals No. 3 and No. 4	Continuity exists.
When current does not flow.	Between terminals No. 3 and No. 5	Continuity exists.
	Between terminals No. 3 and No. 4	Continuity does not exist.
	Between terminals No. 1 and No. 2	Continuity exists.

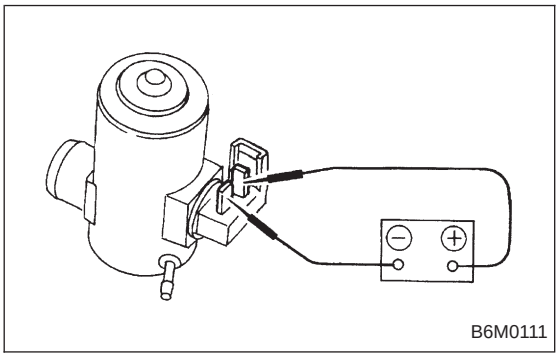

4. WASHER MOTOR

Apply battery voltage between terminals of washer motor connector and check that washer motor operates.

12. Rear Window Defogger

A: REMOVAL AND INSTALLATION

1. DEFOGGER SWITCH

1) Remove screws which secure meter visor.
2) Remove meter visor from instrument panel while disconnecting connectors.
3) Remove rear window defogger switch from meter visor.

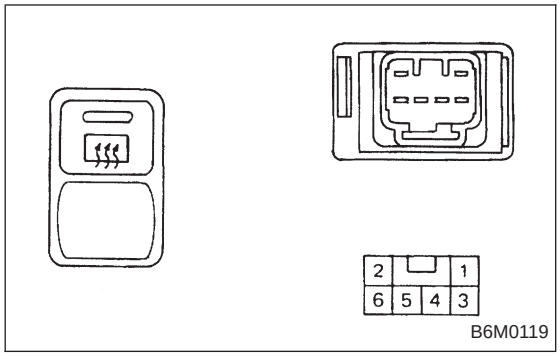

B: INSPECTION

1. DEFOGGER SWITCH

Move rear window defogger switch to each position and check continuity between terminals as indicated in table below:

Switch position \ Terminal	3	5		1	4		2
OFF					○	Ω	○
ON	○	○	Ω	○	○	Ω	○

2. DEFOGGER RELAY

Check continuity between terminals as indicated in table below, when connecting the battery to terminal No. 1 and No. 3.

When current flows.	Between terminals No. 2 and No. 4	Continuity exists.
When current does not flow.	Between terminals No. 2 and No. 4	Continuity does not exist.
	Between terminals No. 1 and No. 3	Continuity exists.

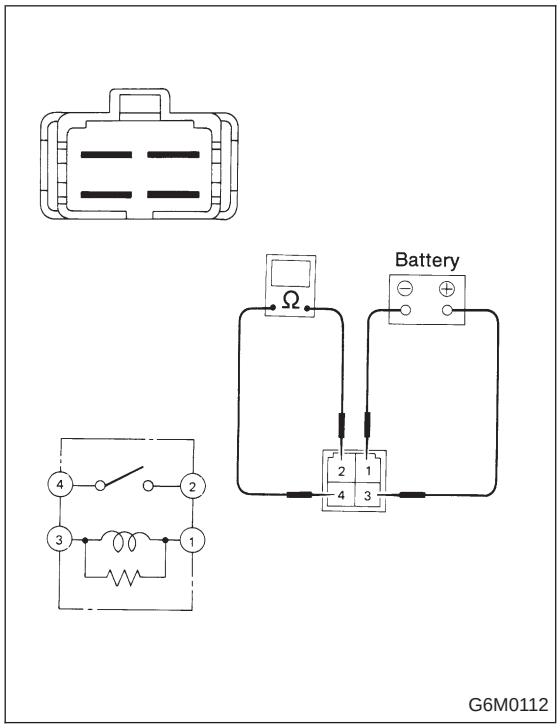

3. HEAT WIRES

1) Start the engine so that battery is being charged.
2) Turn defogger switch to ON.
3) Check each heat wire at its center position for discontinuity by setting direct current voltmeter.
Normal indication is about 6 volts.

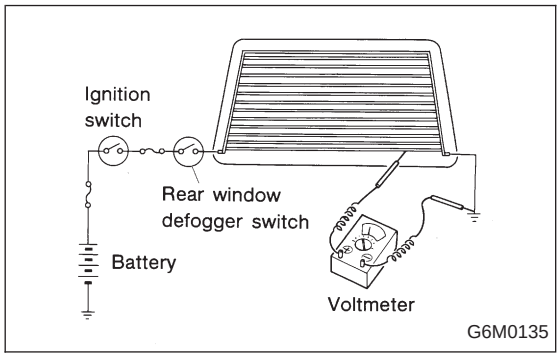

NOTE:
When measuring voltage, wind a piece of tin foil around the tip of the tester probe and press the foil against the wire with your finger.

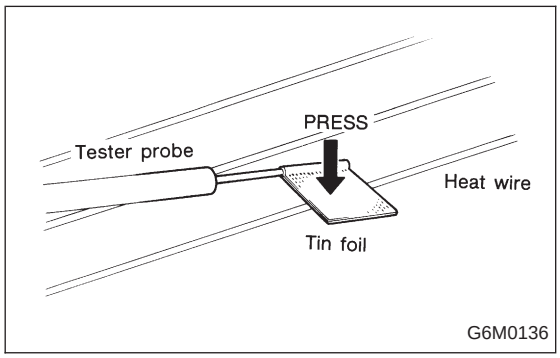

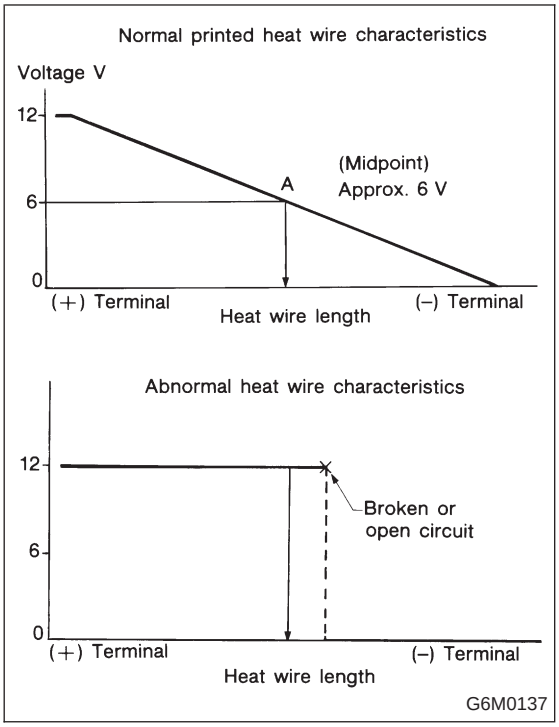

4) When tester indicates 12 volts when its probe reaches point “A”, a broken circuit occurs between point “A” and the negative terminal. Slowly move tester probe toward the negative terminal while contacting it on heat wire to locate point where tester indication changes abruptly (0 volts). This is the point where a broken circuit occurs.
When tester indicates 0 volts when its probe reaches point “A”, a broken circuit occurs between point “A” and the positive terminal. Locate a point where tester indication changes abruptly (12 volts) while slowly moving tester probe toward the positive terminal.

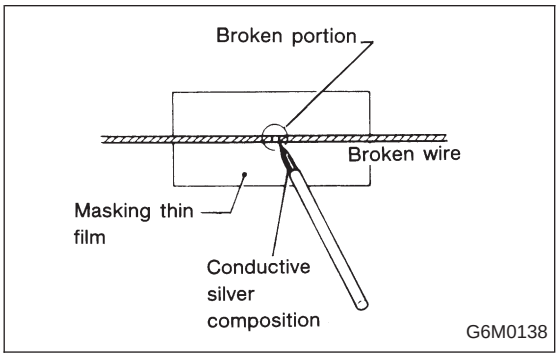

C: REPAIR

1) Clean broken wire and its surrounding area.
2) Cut off slit on (used) thin film by 0.5 mm (0.020 in) width and 10 mm (0.39 in) length.
3) Place the slit on glass along the broken wire, and deposit conductive silver composition (DUPONT No. 4817) on the broken portion.
4) Dry out the deposited portion.
5) Inspect the repaired wire for continuity.

13. Combination Meter

A: REMOVAL AND INSTALLATION

1. COMBINATION METER

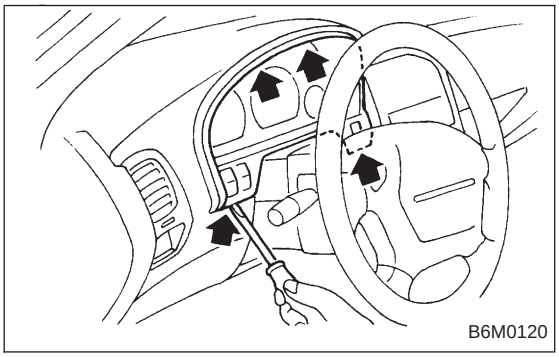

1) Move steering wheel fully down.
2) Remove screws which secure meter visor.
3) Remove visor from instrument panel.
4) Disconnect connectors from meter visor.

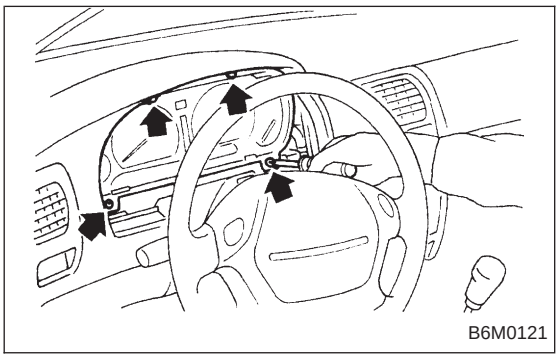

5) Remove screws which secure combination meter, and pull combination meter out.
6) Disconnect connectors from back of combination meter.

CAUTION:
When installing combination meter, be sure to connect connectors to backside of combination meter.