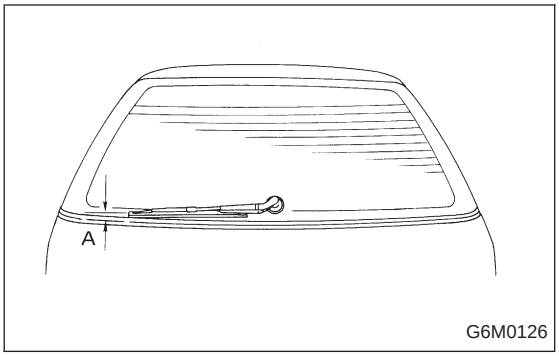

11. Rear Wiper and Washer

A: ON-CAR SERVICES

1. ADJUSTMENT

1) Adjust wiper blade in original position as shown in figure by changing wiper arm installation.

Original position:
A: 25 — 35 mm (0.98 — 1.38 in)

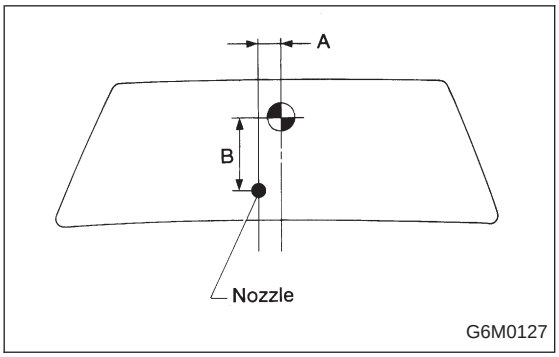

2) Adjust washer ejecting point on rear gate window as shown in figure when the vehicle stops.

Ejecting point:
A: 25 mm (0.98 in)
B: 200 — 300 mm (7.87 — 11.81 in)

B: REMOVAL AND INSTALLATION

1. BLADE

Pull out blade following the arrow direction, from arm while pushing up locking clip.

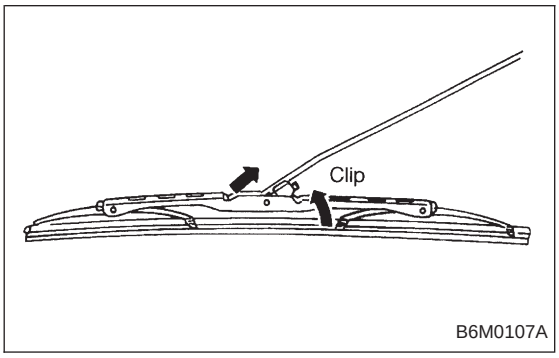

2. WIPER ARM

1) Remove head cover.
2) Remove nut and wiper arm.

Tightening torque:
5.9±1.5 N·m (0.6±0.15 kg-m, 4.3±1.1 ft-lb)

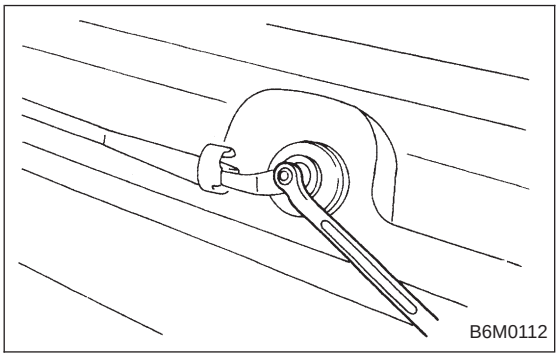

3. WIPER MOTOR

1) Remove cap and special nut.

CAUTION:
Be careful not to strike service tool against nozzle during removal.

Tightening torque:
7.4±1.5 N·m (0.75±0.15 kg-m, 5.4±1.1 ft-lb)

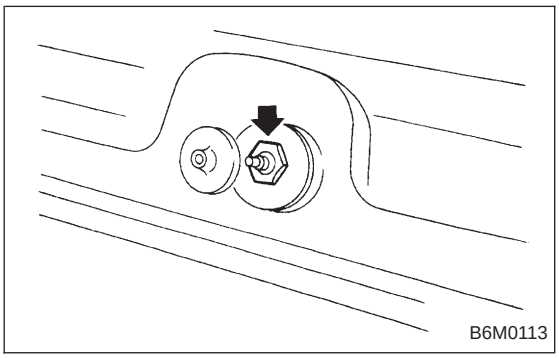

2) Remove rear gate trim. <Ref. to 5-2 [W3A1].>
3) Undo clips which secure harness, and disconnect connector of wiper motor.

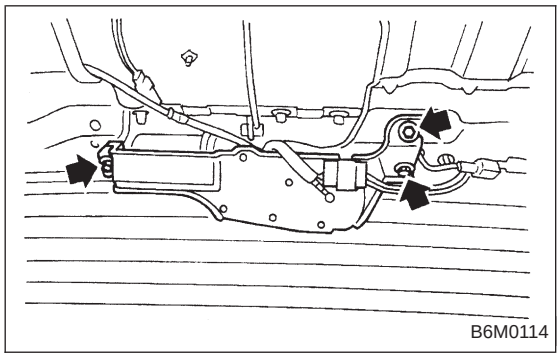

4) Separate washer hoses at joint.
5) Remove attaching screws and take out wiper motor assembly.

CAUTION:
Be careful not to damage O-ring when removing wiper motor assembly.

Tightening torque:
5.9±1.5 N·m (0.6±0.15 kg-m, 4.3±1.1 ft-lb)

4. WASHER TANK AND WASHER MOTOR

Refer to 6-2 [W10B4] as for removal and installation of washer tank and washer motor.

5. COMBINATION SWITCH

Refer to 6-2 [W4B3] as for removal and installation of combination switch.

C: DISASSEMBLY AND ASSEMBLY

1. COMBINATION SWITCH

Refer to 6-2 [W4C1] as for disassembly and assembly of combination switch.

D: INSPECTION

1. COMBINATION SWITCH (ON-CAR)

1) Remove instrument panel lower cover.
2) Remove lower column cover.

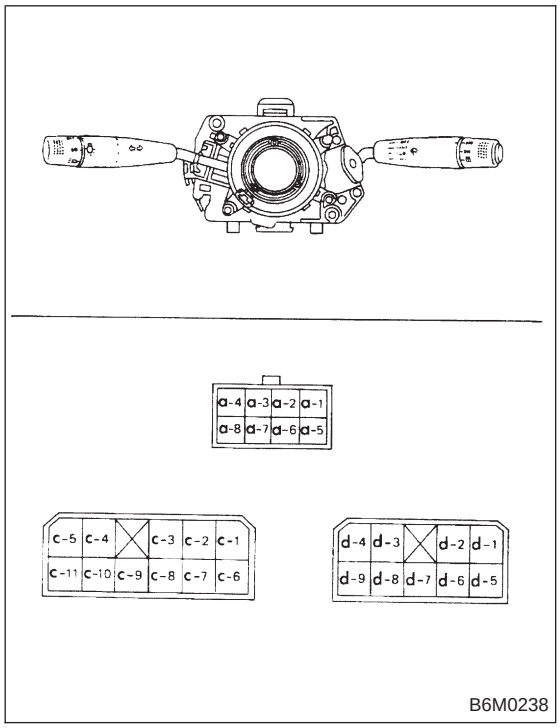

3) Unfasten holddown clip which secures harness, and disconnect connectors from body harness.
4) Set rear wiper and washer switch to each position and check continuity between terminals as indicated in table below:

Terminal / Switch position	d-2	d-1	d-3
WASH	○	○	
OFF			
ON	○		○
WASH	○	○	○

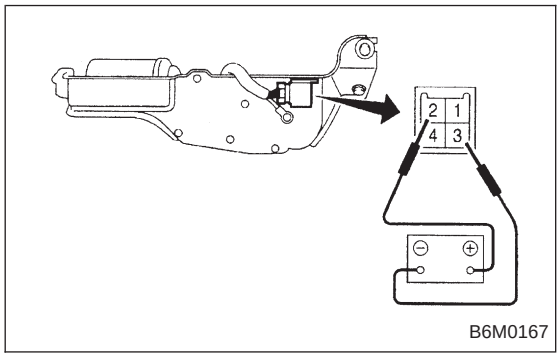

2. WIPER MOTOR

1) Operational check

Connect battery to wiper motor and check operation of wiper motor.

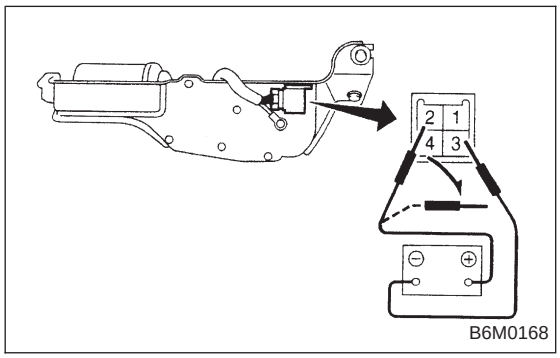

2) Check wiper motor for proper stoppage.
After operating wiper motor, disconnect battery from wiper motor.

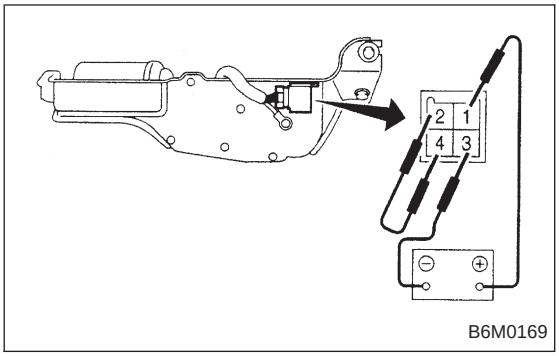

3) Reconnect battery and ensure that wiper motor stops at “AUTO STOP” after it has been operated.

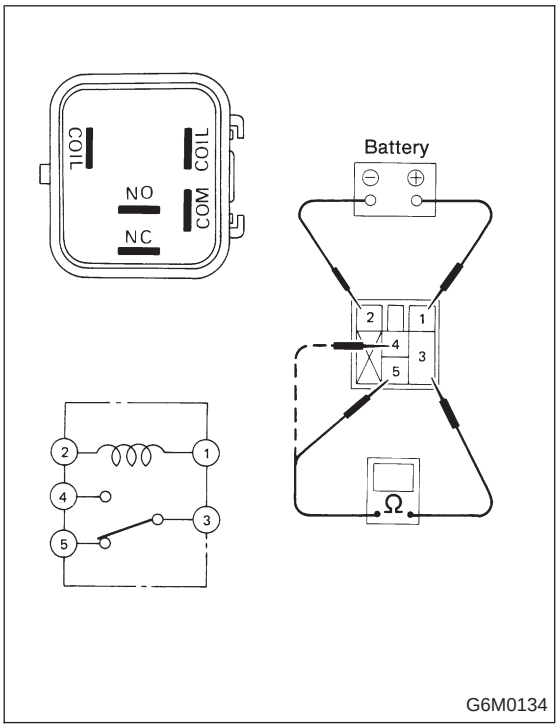

3. REAR WIPER RELAY

1) Connect battery to terminal No. 1 and ground terminal No. 2.
2) Check continuity between terminals as indicated in table below:

When current flows.	Between terminals No. 3 and No. 5	Continuity does not exist.
	Between terminals No. 3 and No. 4	Continuity exists.
When current does not flow.	Between terminals No. 3 and No. 5	Continuity exists.
	Between terminals No. 3 and No. 4	Continuity does not exist.
	Between terminals No. 1 and No. 2	Continuity exists.

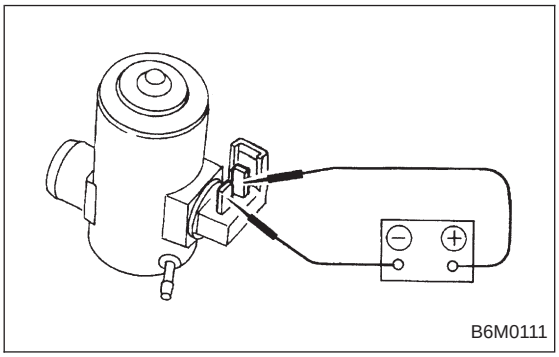

4. WASHER MOTOR

Apply battery voltage between terminals of washer motor connector and check that washer motor operates.

12. Rear Window Defogger

A: REMOVAL AND INSTALLATION

1. DEFOGGER SWITCH

1) Remove screws which secure meter visor.
2) Remove meter visor from instrument panel while disconnecting connectors.
3) Remove rear window defogger switch from meter visor.