7. Back-up Light

A: REMOVAL AND INSTALLATION

1. BACK-UP LIGHT

Refer to 6-2 [W5A2] as for removal and installation of rear finisher.

2. BACK-UP LIGHT SWITCH (MT MODEL)

Refer to 3-1 [W2B1 (AWD) or W3A0 (FWD)] as for removal and installation of back-up light switch.

3. INHIBITOR SWITCH (AT MODEL)

Refer to 3-2 [W4A4] as for removal and installation of inhibitor switch (R position switch).

B: INSPECTION

1. INHIBITOR SWITCH (AT MODEL)

Refer to 3-2 [W2B2] as for inspection of inhibitor switch.

8. Room Light and Door Switch

A: REMOVAL AND INSTALLATION

1. ROOM LIGHT

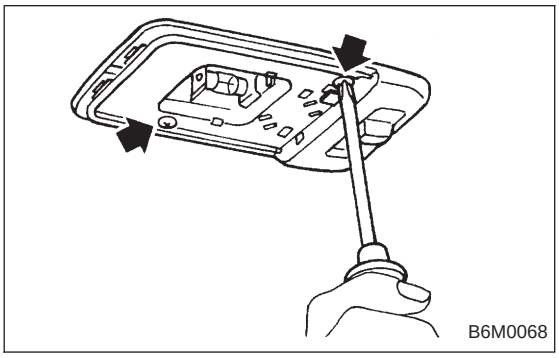

1) Pry room light lens off using a screwdriver.
2) Remove screws which secure room light body.
3) Remove room light body while disconnecting connector.

2. TRUNK ROOM LIGHT (SEDAN)

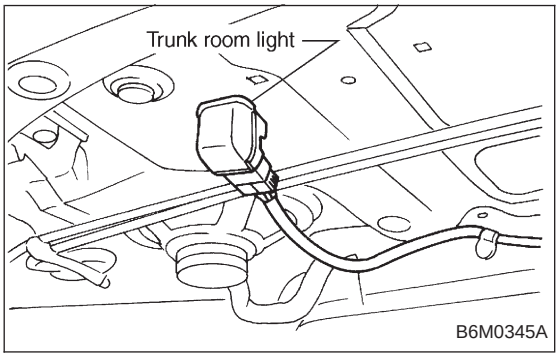

1) Turn trunk room light body by hand and remove it from rear shelf panel.
2) Disconnect connector of trunk room light.

3. LUGGAGE ROOM LIGHT (WAGON)

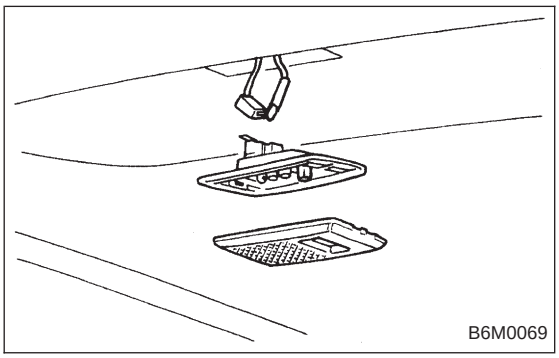

1) Pry luggage room light lens off using a screwdriver.
2) Remove screws which secure luggage room light body.
3) Remove luggage room light body while disconnecting connector.

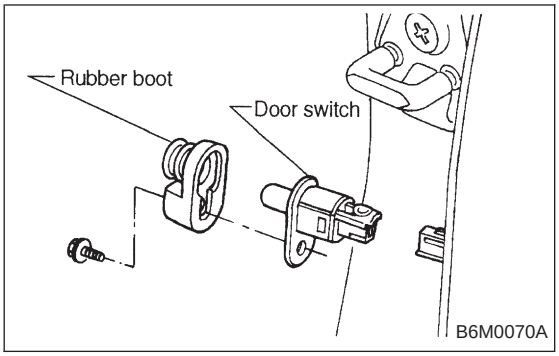

4. DOOR SWITCH

1) Remove rubber boot of door switch.
2) Remove screw which secures door switch to body.
3) Remove door switch while disconnecting connector.

5. TRUNK ROOM LIGHT SWITCH (SEDAN)

Refer to 5-1 [W2A3] as for removal and installation of trunk room light switch which is installed in trunk lid lock.

6. LUGGAGE ROOM LIGHT SWITCH (WAGON)

Refer to 5-2 [W3A2] as for removal and installation of luggage room light switch which is installed in rear gate lock.

B: INSPECTION

1. DOOR SWITCH

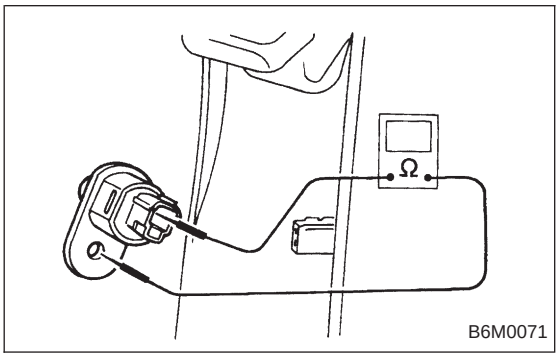

Move switch and check continuity between terminal of door switch and switch body.

Switch position	Terminal	Switch body
Open (ON)	○	○
Push in (OFF)		

2. TRUNK ROOM LIGHT SWITCH (SEDAN)

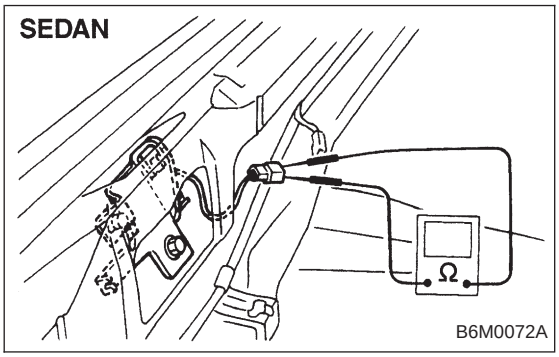

Move switch and check continuity between terminals of trunk room light switch.

Terminal / Switch position	1	2
Open (ON)	○	○
Push in (OFF)		

3. LUGGAGE ROOM LIGHT SWITCH (WAGON)

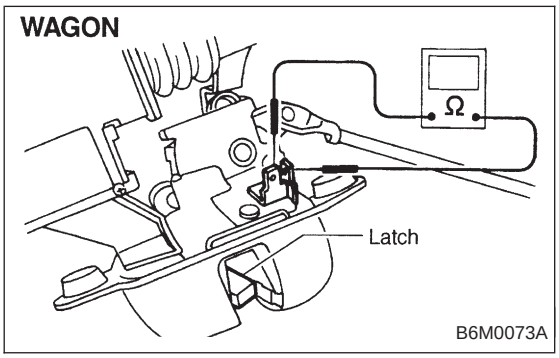

Move switch and check continuity between terminals of luggage room light switch.

Terminal / Switch position	1	2
Open (ON)	○	○
Push in (OFF)		