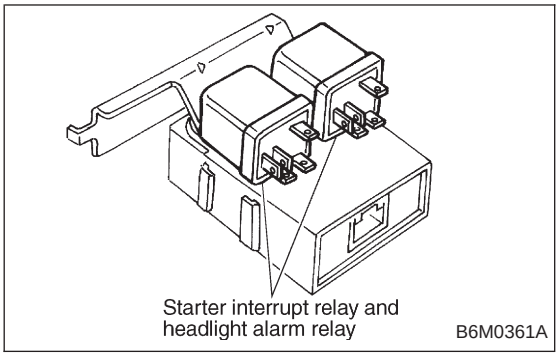

22. Security System

A: REMOVAL AND INSTALLATION

1. STARTER INTERRUPT RELAY

NOTE:
The starter interrupt relay and headlight alarm relay use the same parts and are mounted parallel to each other. Therefore, before removal and installation, identify the starter interrupt relay by the color of its wiring connection. <Ref. to 6-3 [WIRING DIAGRAM SECTION].>

1) Remove instrument panel lower cover.
2) Disconnect connector of starter interrupt relay.
3) Remove starter interrupt relay.
4) Installation is in the reverse order of removal.

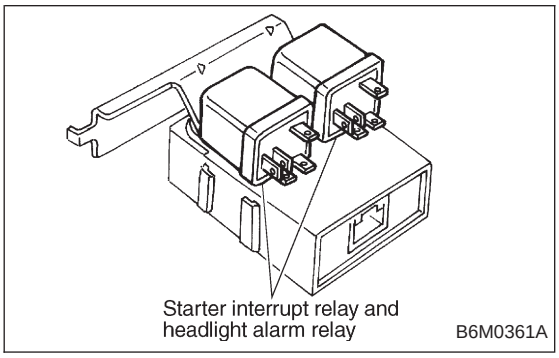

2. HEADLIGHT ALARM RELAY

NOTE:
The headlight alarm relay and starter interrupt relay use the same parts and are mounted parallel to each other. Therefore, before removal and installation, identify the headlight alarm relay by the color of its wiring connection. <Ref. to 6-3 [WIRING DIAGRAM SECTION].>

1) Remove instrument panel lower cover.
2) Disconnect connector of headlight alarm relay.
3) Remove headlight alarm relay.
4) Installation is in the reverse order of removal.

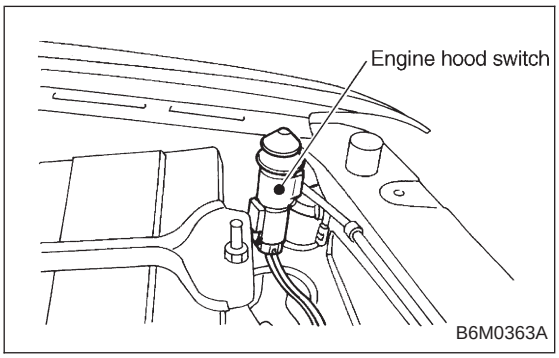

3. ENGINE HOOD SWITCH

1) Disconnect connector of engine hood switch from bottom side of switch body.
2) Remove headlight (LH).
3) Remove attaching bolt, and then remove engine hood switch.
4) Installation is in the reverse order of removal.

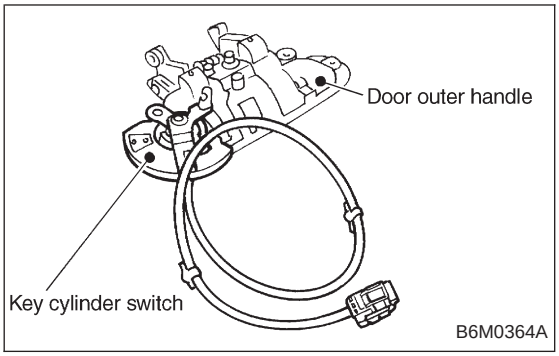

4. KEY CYLINDER LOCK/UNLOCK SWITCH AND TAMPER SWITCH

NOTE:
The key cylinder lock switch, unlock switch and tamper switch are united in the switch body.

Door Switch

1) Remove door trim panel and sealing cover. <Ref. to 5-2 [W2A3].>
2) Disconnect connector of door key cylinder switch from door cord.
3) Remove door outer handle. <Ref. to 5-2 [W2A8].>

CAUTION:
Be careful not to damage the door surface.

4) Remove clip, and then remove door key cylinder switch from door outer handle.
5) Installation is in the reverse order of removal.

Trunk Lid Switch (SEDAN)

1) Disconnect connector of trunk lid key cylinder switch.
2) Disconnect rod from key cylinder.
3) Remove trunk lid key cylinder switch by pushing it.
4) Installation is in the reverse order of removal.

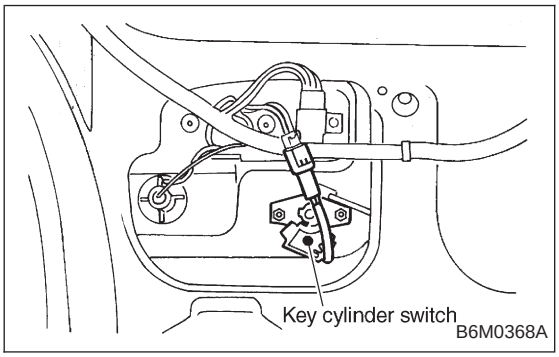

Rear Gate Switch (WAGON)

1) Disconnect connector of rear gate key cylinder switch.
2) Disconnect rod from key cylinder.
3) Remove attaching bolts, and then remove rear gate key cylinder switch.
4) Installation is in the reverse order of removal.

5. DOOR LOCK/UNLOCK SWITCH

NOTE:
The door lock/unlock switch is united with the power door lock actuator.

Driver and Passenger Door

1) Remove door trim panel and sealing cover. <Ref. to 5-2 [W2A3].>
2) Disconnect connector of door lock actuator assembly from door code.

3) Remove door lock actuator assembly. <Ref. to 5-2 [W2A7].>
4) Installation is in the reverse order of removal.

Rear Gate (WAGON)

1) Remove rear gate trim panel.
2) Disconnect rod from rear gate latch assembly.
3) Disconnect rear gate switch connector and power door lock actuator connector.
4) Remove bolts which secure power door lock actuator.
5) Remove bolts which secure latch.
6) Remove latch and actuator assembly.
7) Installation is in the reverse order of removal.

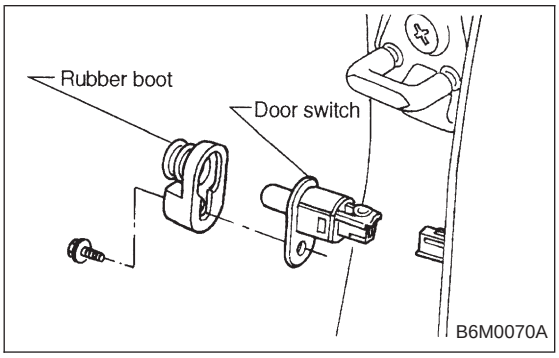

6. DOOR SWITCH

1) Remove rubber boot of door switch.
2) Remove screw which secures door switch to body.
3) Remove door switch while disconnecting connector.

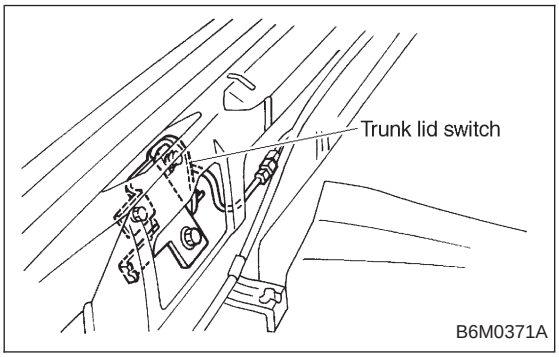

7. TRUNK LID SWITCH (SEDAN)

NOTE:
The trunk lid switch is united with the trunk lid lock.
1) Remove trunk rear trim.
2) Disconnect connector of trunk switch (combined with trunk room light switch).
3) Put matching mark on the trunk lid lock and vehicle body before removal.
4) Remove bolts, then remove trunk lid lock from vehicle body.
5) Installation is in the reverse order of removal.

NOTE:
Ensure that matching mark is aligned between trunk lid lock and vehicle body.

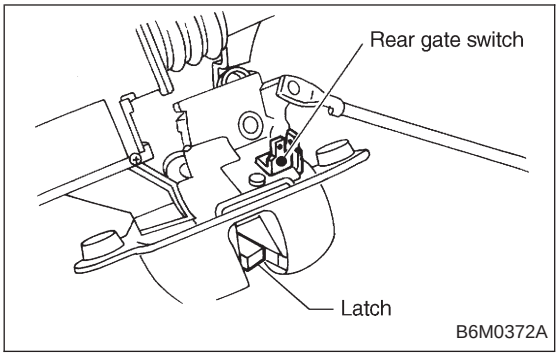

8. REAR GATE SWITCH (WAGON)

NOTE:
The rear gate switch is united with the rear gate latch assembly.

1) Remove rear gate trim panel.
2) Disconnect rod from rear gate latch assembly.
3) Disconnect rear gate switch (combined with luggage room light switch) connector and power door lock actuator connector.
4) Remove bolts which secure power door lock actuator.
5) Remove bolts which secure latch.
6) Remove latch and actuator assembly.
7) Installation is in the reverse order of removal.

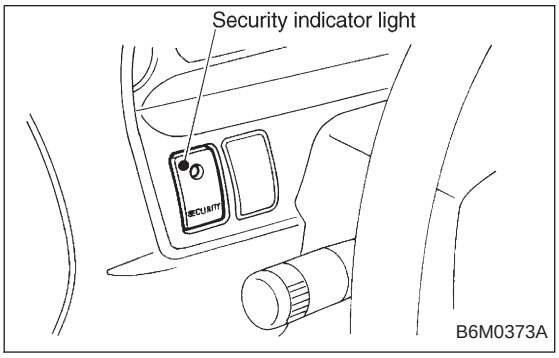

9. SECURITY INDICATOR LIGHT

1) Remove screws which secure meter visor.
2) Remove meter visor from instrument panel while disconnecting connectors.
3) Remove security indicator light from meter visor.
4) Installation is in the reverse order of removal.

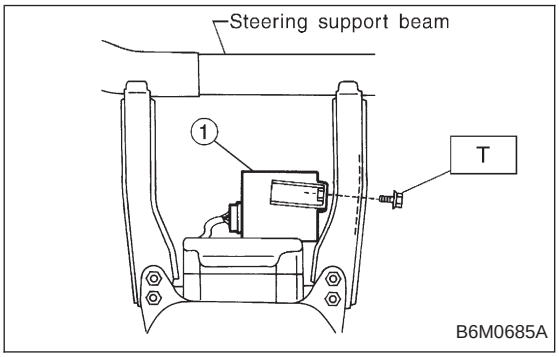

10. SECURITY CONTROL MODULE

1) Remove instrument panel. <Ref. to 5-4 [W1A0].>
2) Remove bolt which secures security control module ①.
3) Remove security control module while disconnecting connector.
4) Installation is in the reverse order of removal.

Tightening torque (spark plug):
7.4±2.0 N·m (0.75±0.2 kg-m, 5.4±1.4 ft-lb)

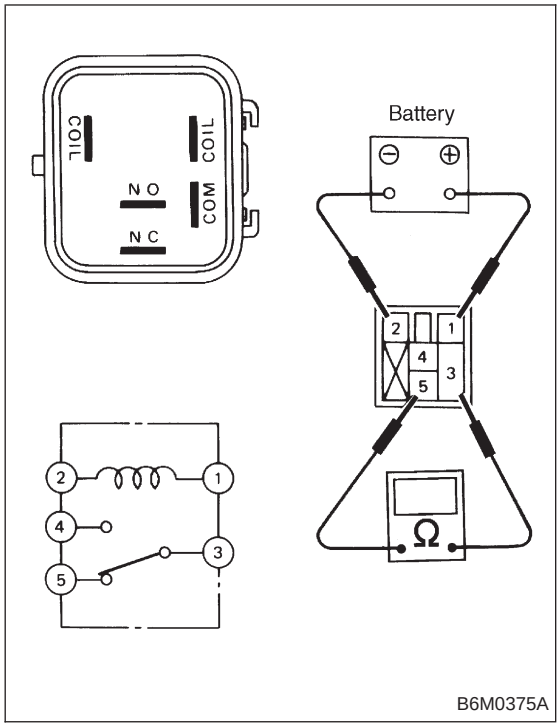

B: INSPECTION

1. STARTER INTERRUPT RELAY

1) Disconnect connector of starter interrupt relay.
2) Connect battery to terminal No.1 and ground terminal No. 2.
3) Check continuity between terminals as indicated in table below:

When current flows.	Between terminals No. 3 and No. 5	Continuity does not exist.
When current does not flow.	Between terminals No. 3 and No. 5	Continuity exists.
	Between terminals No. 1 and No. 2	Continuity exists.

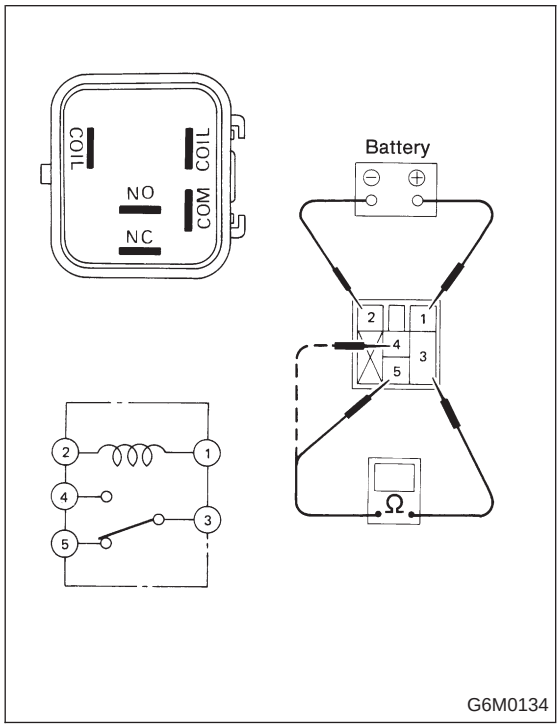

2. HEADLIGHT ALARM RELAY

1) Disconnect connector of headlight alarm relay.
2) Connect battery to terminal No. 1 and ground terminal No. 2.
3) Check continuity between terminals as indicated in table below:

When current flows.	Between terminals No. 3 and No. 5	Continuity does not exist.
	Between terminals No. 3 and No. 4	Continuity exists.
When current does not flow.	Between terminals No. 3 and No. 5	Continuity exists.
	Between terminals No. 3 and No. 4	Continuity does not exist.
	Between terminals No. 1 and No. 2	Continuity exists.

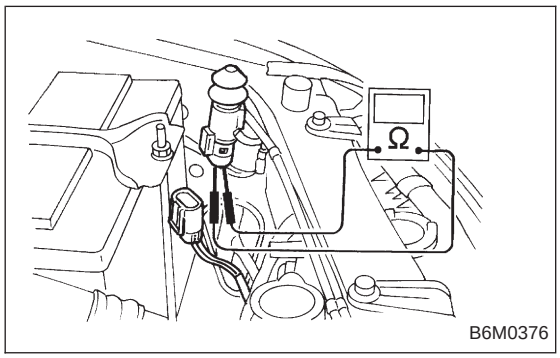

3. ENGINE HOOD SWITCH

1) Disconnect connector of engine hood switch.
2) Check continuity between terminals when push rod is pushed in 1.5 mm (0.059 in) of its stroke.

Terminal / Switch position	1	2
When push rod is pushed in.		
When push rod is released.	○	○

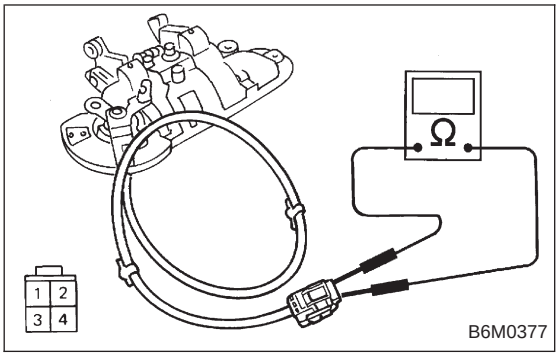

4. KEY CYLINDER LOCK/UNLOCK SWITCH AND TAMPER SWITCH

Door Switch

1) Disconnect connector of door key cylinder switch.
2) Move switch by turning the key cylinder with ignition key and/or remove switch from key cylinder to check continuity between terminals as indicated in table below:

Terminal / Switch position	1	2	3	4
Normal				
LOCK	○			○
UNLOCK		○		○
Switch is removed from key cylinder.			○	○

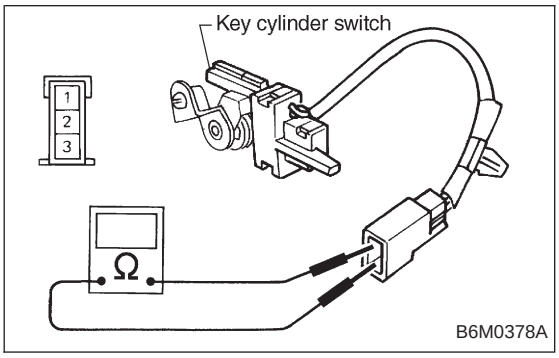

Trunk Lid Switch (SEDAN)

1) Disconnect connector of trunk lid key cylinder switch.
2) Move switch by turning the key cylinder with ignition key and/or remove switch from key cylinder to check continuity between terminals as indicated in table below:

Terminal / Switch position	1	2	3
Normal			
UNLOCK	○		○
Switch is removed from key cylinder.		○	○

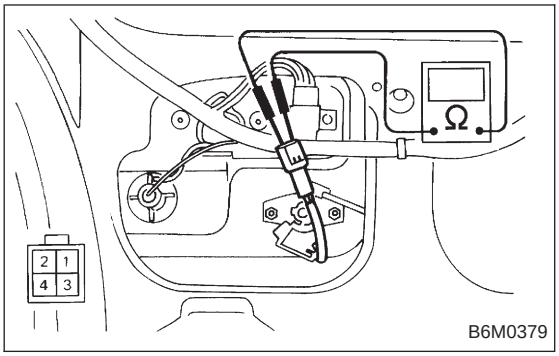

Rear Gate Switch (WAGON)

1) Disconnect connector of rear gate key cylinder switch.
2) Move switch by turning the key cylinder with ignition key and check continuity between terminals as indicated in table below:

Terminal / Switch position	1	2	4
Normal			
LOCK	○		○
UNLOCK		○	○

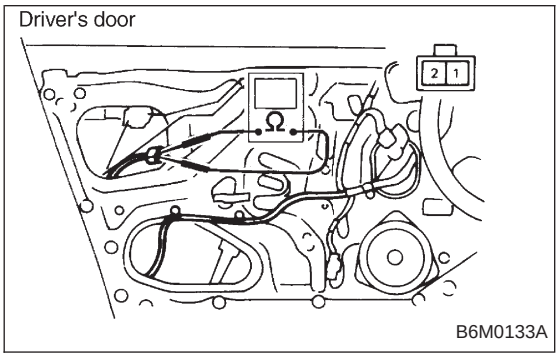

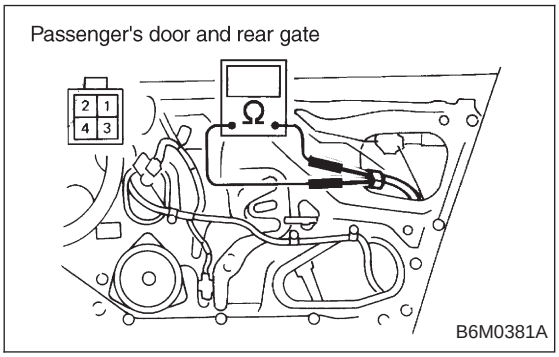

5. DOOR LOCK/UNLOCK SWITCH

NOTE:
The door lock/unlock switch is united with the power door lock actuator.

1) Disconnect connector of door lock/unlock switch.
2) Set switch to each position and check continuity between terminals as indicated in table below:

Driver's Door

Terminal / Switch position	1	2
UNLOCK	○	○
LOCK		

Passenger's Door

Terminal / Switch position	1	2	3	4
UNLOCK	○		○	
LOCK				

Rear Gate (WAGON)

Terminal / Switch position	1	2	3	4
UNLOCK	○		○	
LOCK				

6. DOOR SWITCH

Refer to 6-2 [W8B1] as for inspection of door switch.
NOTE:
The door switch is combined with the door switch for room light.

7. TRUNK LID SWITCH (SEDAN)

Refer to 6-2 [W8B2] as for inspection of trunk lid switch.
NOTE:
The trunk lid switch is combined with the trunk room light switch.

8. REAR GATE SWITCH (WAGON)

Refer to 6-2 [W8B3] as for inspection of rear gate switch.
NOTE:
The rear gate switch is combined with the luggage room light switch.

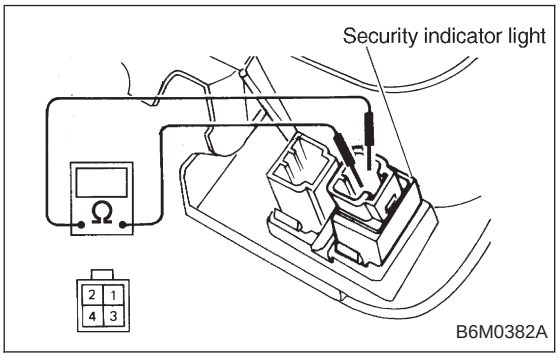

9. SECURITY INDICATOR LIGHT

1) Remove security indicator light.
2) Check continuity between terminals of security indicator light.
3) If there is no continuity, the indicator light will be failured.

Terminals: No. 2 — No. 4

10. SECURITY CONTROL MODULE

Refer to 6-2 [K600]: “6. SECURITY SYSTEM” for inspection of security control module.

C: FUNCTION TEST

1. SECURITY SYSTEM OPERATION

1) Fully open all the door windows.
2) Turn the ignition switch to OFF and remove ignition key from ignition switch.
3) Get out of the vehicle and lock the driver's door using a ignition key.

4) Check that the security indicator light illuminates.
5) When the security indicator light illuminates, wait for 30 seconds.
After 30 seconds, check that the light starts repeating 0.2 sec. ON and 2.4 sec. OFF sequence.

6) Unlock the driver's door using the inside lock knob and open the door.
Ensure that:

(1) the horn sounds and headlights flash intermittently at 0.2 sec. ON and 0.6 sec. OFF. intervals, and
(2) the engine will not start even if the ignition switch is turned to START.

7) Unlock the driver's door one time using the ignition key.
Ensure the horn and headlights turn off.

8) Close and lock the driver's door without using a ignition key. (Set the inside lock knob to LOCK and then close the door while lifting the outer handle).
Check that the security indicator light illuminates continuously.

9) Within 30 seconds after the above step 8), unlock the rear LH door using the inside lock knob and open the door.
Check that the security indicator light flashes at 0.5 sec. intervals.
10) Close the rear LH door and lock the door using the inside lock knob.
Check that the security indicator light illuminates continuously.

11) Perform the above steps 9) and 10) on the rear RH door and front RH door.

12) Within 30 seconds after above step 11) has been finished, pull the engine hood opener lever and open the engine hood.
Check that the security indicator light flashes at 0.5 sec. intervals.
13) Close the engine hood completely.
Check that the security indicator light illuminates continuously.

14) Within 30 seconds after the above step 13), pull the trunk lid opener lever and open the trunk lid (SEDAN); or unlock the rear gate by operating the driver's door inside lock knob and open the rear gate (WAGON).
Check that the security indicator light flashes at 0.5 sec. intervals.
15) Close the trunk lid completely (SEDAN); or close the rear gate and lock by locking the driver's door using a ignition key (WAGON).
Check that the security indicator light illuminates continuously.
16) When the security indicator light illuminates continuously, wait for 30 seconds.
After 30 seconds, check that the light starts repeating 0.2 sec. ON and 2.4 sec. OFF sequence.

17) Unlock the trunk lid (SEDAN) or rear gate (WAGON) using a ignition key and open.
Check that the horn and headlights do not operate.
18) Close the trunk lid (SEDAN) or rear gate (WAGON).

19) Unlock and then lock the driver's door using a ignition key and wait for 30 seconds.
After 30 seconds, check that the light starts repeating 0.2 sec. ON and 2.4 sec. OFF sequence.

20) Only WAGON model; unlock and then lock the rear gate using a ignition key and wait for 30 seconds.
After 30 seconds, check that the light starts repeating 0.2 sec. ON and 2.4 sec. OFF sequence.

21) Unlock the front RH door using a ignition key and open the door.
Check that the horn and headlights do not operate.
After finishing the above checks, ensure that security system's function is correct.