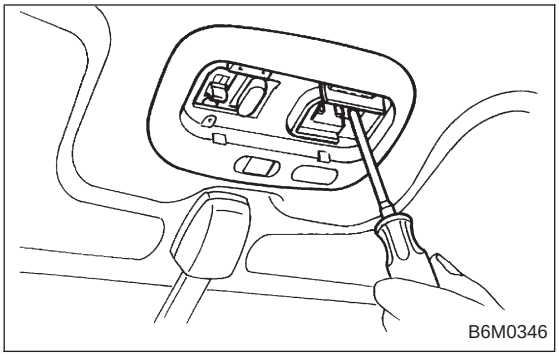

9. Spot Light

A: REMOVAL AND INSTALLATION

1. SPOT LIGHT AND SWITCH

1) Pry spot light lens off using a screwdriver.
2) Remove screws which secure spot light body.
3) Remove spot light body while disconnecting connector(s).

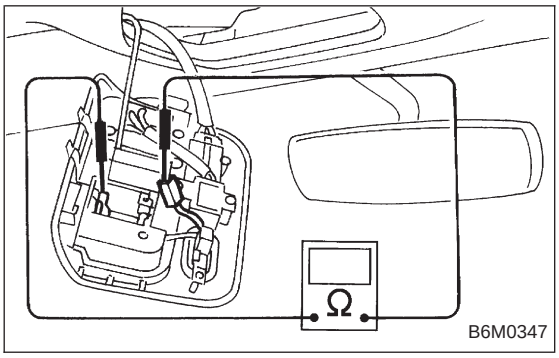

B: INSPECTION

1. SPOT LIGHT SWITCH

Move switch and check continuity between terminal of spot light switch connector and steel plate as shown.

Switch position	Connector terminal	Plate
Open (OFF)		
Push in (ON)	○	○

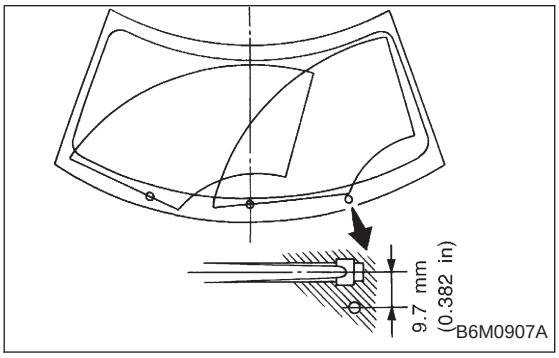

10. Front Wiper and Washer

A: ON-CAR SERVICES

1. ADJUSTMENT

1) Turn the wiper switch to OFF position.
2) Adjust blades in original position as shown in figure by changing wiper arm installation.

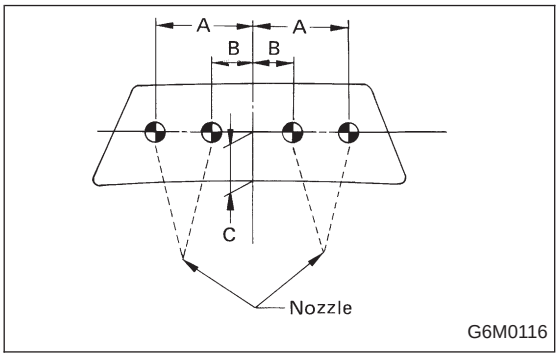

3) Stop the vehicle.
4) Adjust washer ejecting point on windshield glass as shown in figure.

Ejecting point:
A: 375 mm (14.76 in)
B: 150 mm (5.91 in)
C: 380 mm (14.96 in)

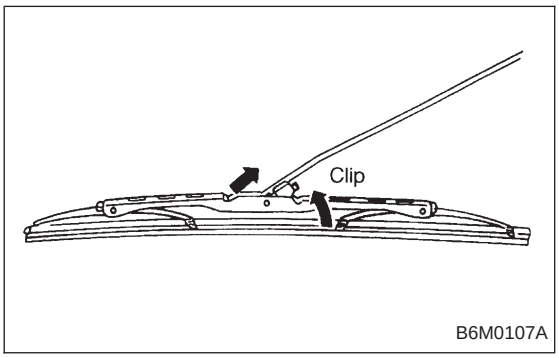

B: REMOVAL AND INSTALLATION

1. BLADE

Pull out blade following the arrow direction from arm while pushing up locking clip.