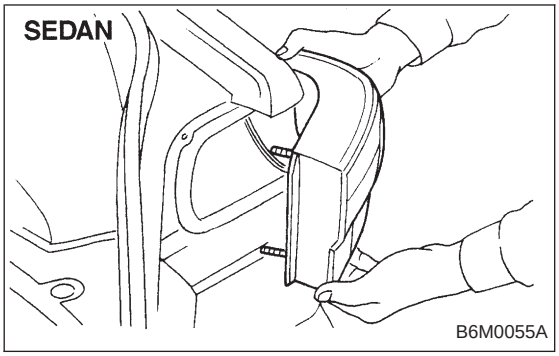

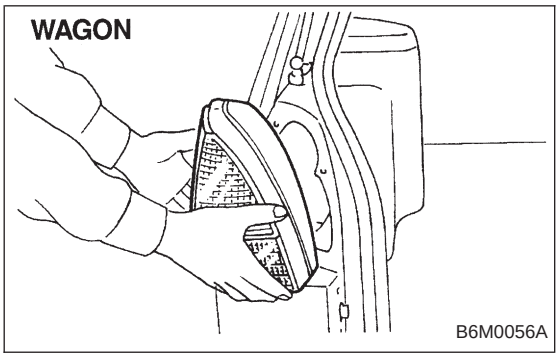

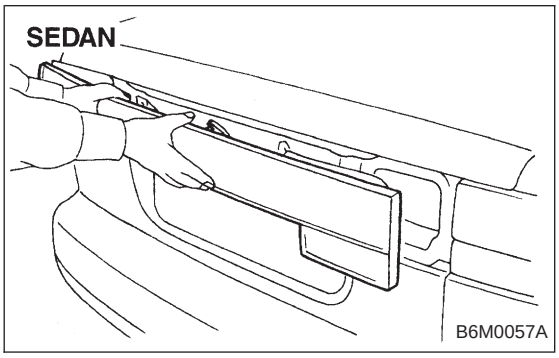

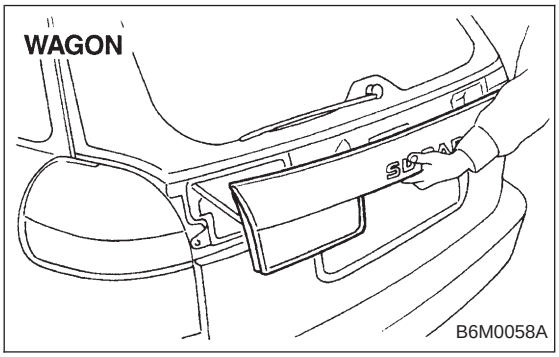

5. Stop and Tail Light

A: REMOVAL AND INSTALLATION

1. REAR COMBINATION LIGHT

1) Remove rear trim.
2) Disconnect connector from rear combination light.
3) Remove nuts which secure rear combination light.

Tightening torque:
2.5±0.5 N·m (0.25±0.05 kg-m, 1.8±0.4 ft-lb)

4) Attach adhesive cloth tape to body area around rear combination light.
5) Using a standard screwdriver, carefully pry rear combination light off and away from the vehicle.

CAUTION:
- **Do not pry rear combination light forcefully as this may scratch vehicle body.**
- **Remove all traces of adhesive tape from body before installation.**
- **Attach butyl rubber tape to back of rear combination light before installing rear combination light on body for sealing purposes.**

2. REAR FINISHER

1) Remove trunk lid trim (SEDAN) or rear gate trim (WAGON).
2) Disconnect connectors from rear finisher.
3) Remove rear wiper motor (WAGON).
4) Remove nuts which secure rear finisher.

Tightening torque:
2.5±0.5 N·m (0.25±0.05 kg-m, 1.8±0.4 ft-lb)

5) Attach adhesive cloth tape to body area around rear finisher.
6) Using a standard screwdriver, carefully pry rear finisher off and away from the vehicle.

CAUTION:
Do not pry rear finisher forcefully as this may scratch vehicle body.

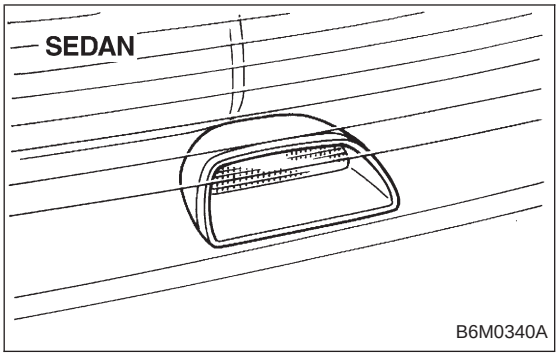

3. HIGH-MOUNT STOP LIGHT (SEDAN)

1) Disconnect connector of high-mount stop light from body harness.
2) Remove screws which secure high-mount stop light to rear shelf panel.
3) Remove high-mount stop light.

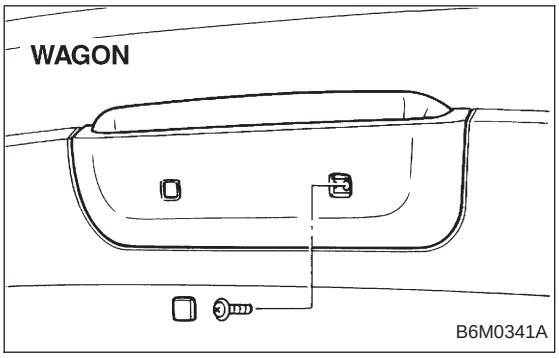

4. HIGH-MOUNT STOP LIGHT (WAGON)

1) Remove high-mount stop light cover from rear gate trim panel.
2) Remove screws which secure high-mount stop light.
3) Remove high-mount stop light while disconnecting connector from body harness.

5. STOP LIGHT SWITCH

Refer to 4-5 [C101 (MT) or C201 (AT)] as for removal and installation of stop light switch.
NOTE:
When installing the stop light switch, adjust the pedal height by adjusting the stop light switch position.

6. COMBINATION SWITCH

Refer to 6-2 [W4B3] as for removal and installation of combination switch.

B: DISASSEMBLY AND ASSEMBLY

1. COMBINATION SWITCH

Refer to 6-2 [W4C1] as for disassembly and assembly of combination switch.

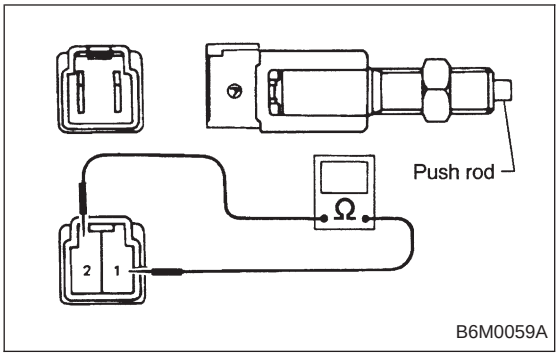

C: INSPECTION

1. STOP LIGHT SWITCH (ON-CAR)

Without cruise control model

1) Disconnect connector of stop light switch from body harness.
2) Check continuity between terminals when push rod is pushed in 4.0 to 4.5 mm (0.157 to 0.177 in) from end of outer case.

Terminal / Switch position	1	2
When push rod is pushed in.		
When push rod is released.	○	○

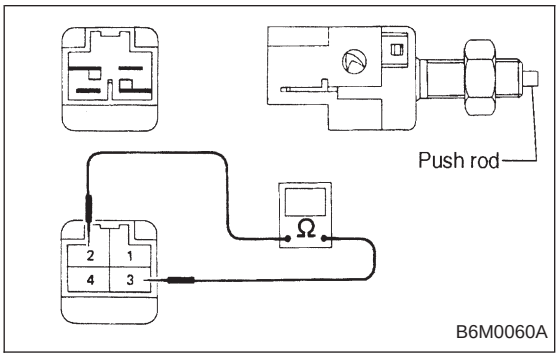

With cruise control model

1) Disconnect connector of stop light switch from body harness.
2) Check continuity between terminals when push rod is pushed in 1.5 to 3.0 mm (0.059 to 0.118 in) from end of outer case.

Terminal / Switch position	1	2	3	4
When push rod is pushed in.	○			○
When push rod is released.		○	○	

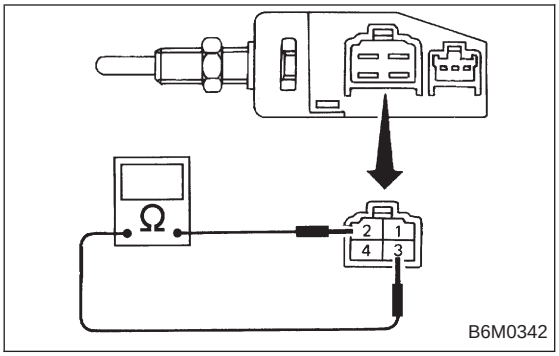

With TCS model

1) Disconnect connector of stop light switch from body harness.
2) Check continuity between terminals when push rod is pushed in 1.2 to 3.2 mm (0.047 to 0.126 in) from end of outer case.

Terminal / Switch position	1	2	3	4
When push rod is pushed in.	○			○
When push rod is released.		○	○	

2. COMBINATION SWITCH (ON-CAR)

Refer to 6-2 [W4D1] as for inspection of combination switch.

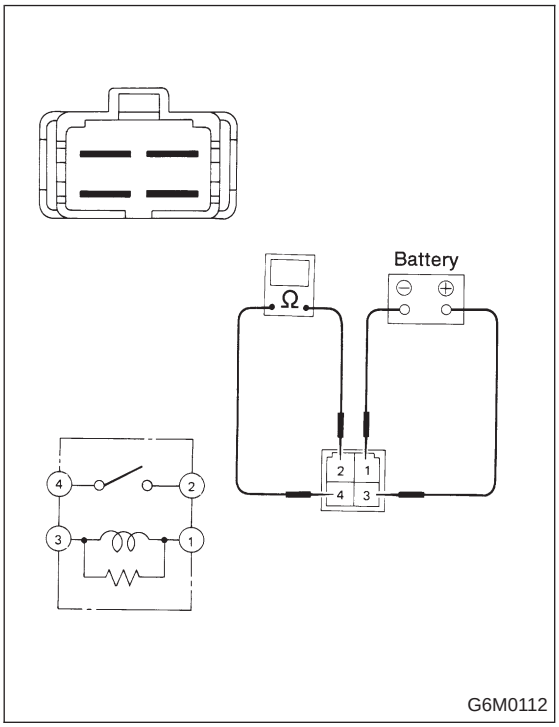

3. TAIL AND ILLUMINATION RELAY

Check continuity between terminals as indicated in table below, when connecting battery to terminal No. 1 and No. 3

When current flows.	Between terminals No. 2 and No. 4	Continuity exists.
When current does not flow.	Between terminals No. 2 and No. 4	Continuity does not exist.
	Between terminals No. 1 and No. 3	Continuity exists.