19. Sunroof

A: REMOVAL AND INSTALLATION

1. SUNROOF AND SUNROOF MOTOR

Refer to 5-1 [W16A0] as for removal and installation of sunroof system.

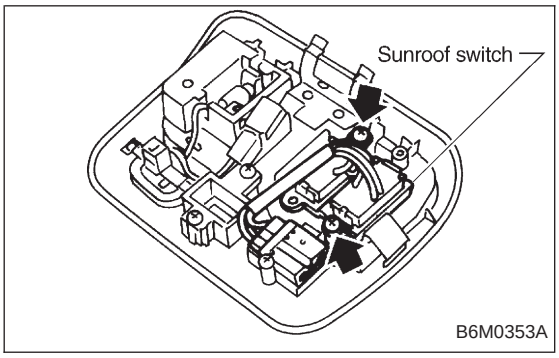

2. SUNROOF SWITCH

NOTE:
The sunroof switch is installed in spot light body.
1) Pry spot light lens off using a screwdriver.
2) Remove screws which secure spot light body.
3) Remove spot light body while disconnecting connectors.
4) Remove screw which secures sunroof switch, and then remove sunroof switch.

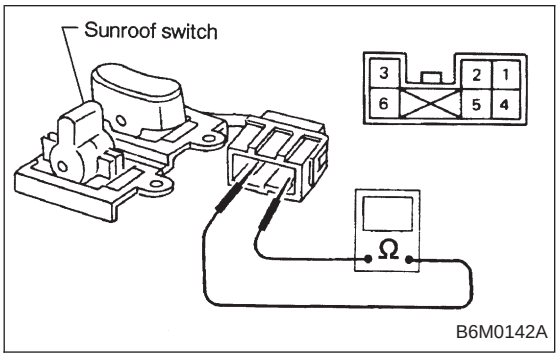

B: INSPECTION

1. SUNROOF SWITCH

Set sunroof switch to each position and check continuity between terminals as indicated in table below:

Terminal / Switch position	4	3	6	5	2
Open	○	○			
Close	○		○		
Tilt up	○			○	
Tilt down	○				○

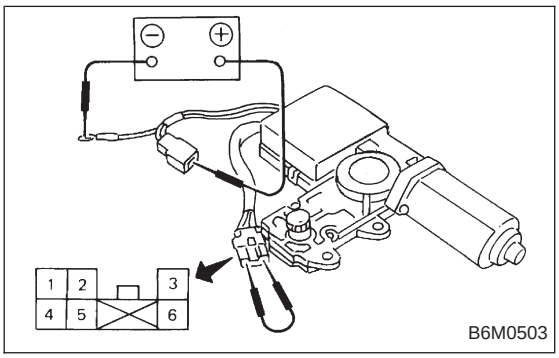

2. SUNROOF MOTOR

1) Apply battery voltage between 1-pin connector and body ground wire.
2) Make sure that sunroof motor moves when connecting terminals as described below:

- Connect between terminals No. 3 and 4 (OPEN)
- Connect between terminals No. 6 and 4 (CLOSE)
- Connect between terminals No. 5 and 4 (TILT UP)
- Connect between terminals No. 2 and 4 (TILT DOWN)

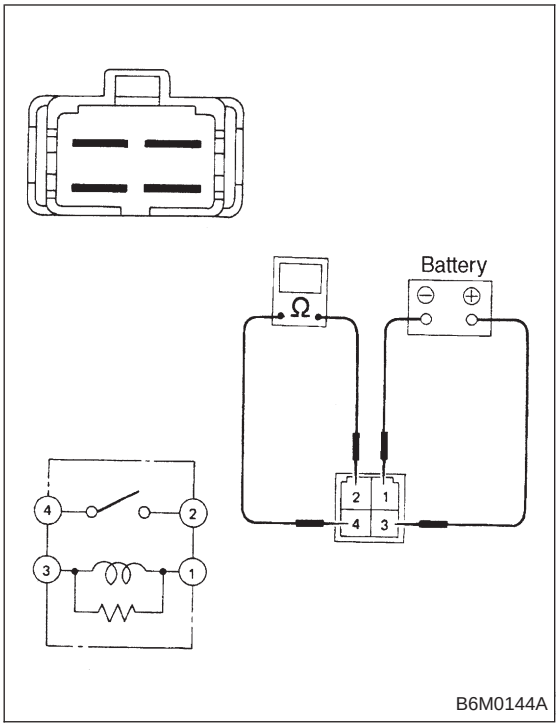

B6M0144A

3. SUNROOF RELAY

Check continuity between terminals as indicated in table below, when battery voltage is applied between terminals No. 1 and No. 3.

When current flows.	Between terminals No. 2 and No. 4	Continuity exists.
When current does not flow.	Between terminals No. 2 and No. 4	Continuity does not exist.
	Between terminals No. 1 and No. 3	Continuity exists.

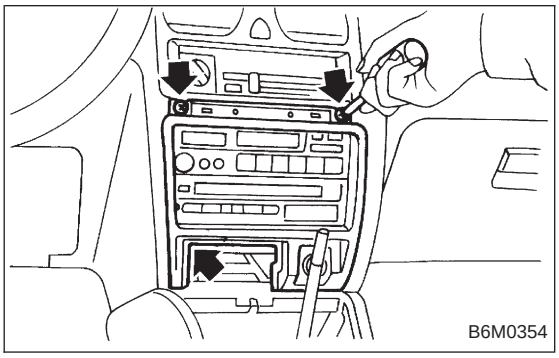
B6M0354

20. Radio, Speaker and Antenna

A: REMOVAL AND INSTALLATION

1. RADIO BODY

1) Remove hand brake cover.
2) Remove console cover.
3) Remove screws which secure center panel. Remove center panel.

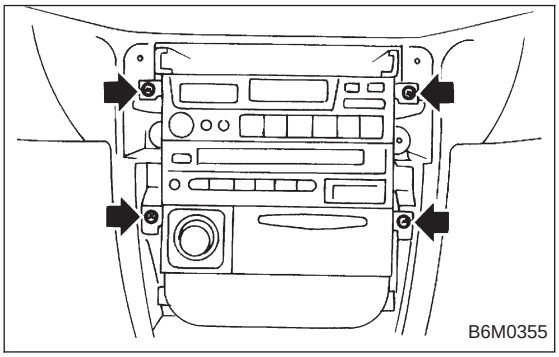
B6M0355

4) Remove fitting screws, and slightly pull radio out of instrument panel.
5) Disconnect connectors and antenna feeder cord.

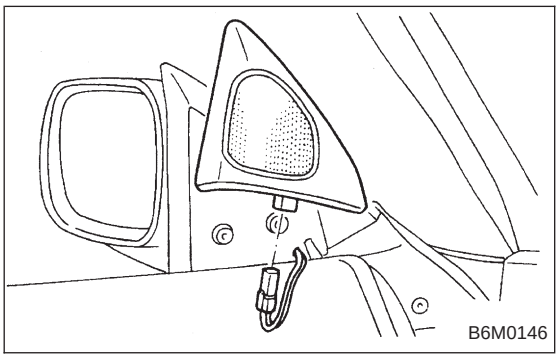
B6M0146

2. FRONT SPEAKER

1) Remove gusset speaker from behind the rearview mirror while disconnecting connector.
2) Remove door trim panel. <Ref. to 5-2 [W2A2].>