6. Turn Signal and Hazard Warning Light

A: REMOVAL AND INSTALLATION

1. FRONT TURN SIGNAL LIGHT

Refer to 6-2 [W4B2] as for removal and installation of front turn signal light.

NOTE:
The front turn signal light is united with headlight assembly.

2. REAR COMBINATION LIGHT

Refer to 6-2 [W5A1] as for removal and installation of rear combination light.

3. COMBINATION SWITCH

Refer to 6-2 [W4B3] as for removal and installation of combination switch.

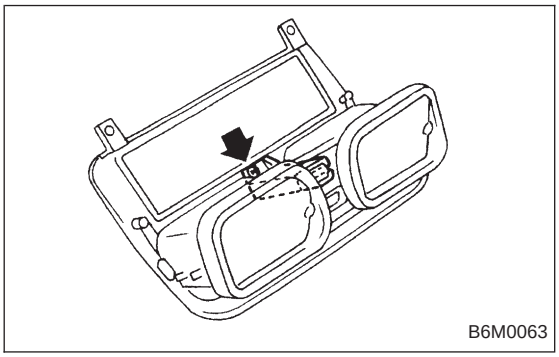

4. HAZARD SWITCH

1) Remove center panel from instrument panel. <Ref. to 5-4 [W1A0].>
2) Disconnect connector of hazard switch from body harness.
3) Remove hazard switch from center panel.

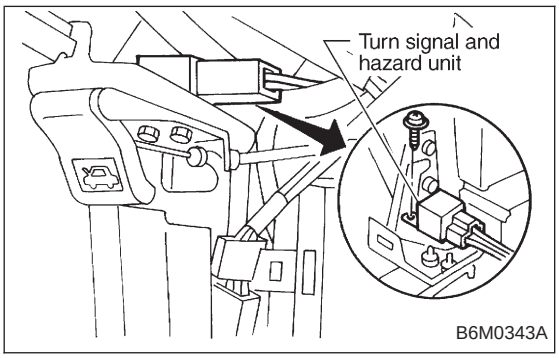

5. TURN SIGNAL AND HAZARD UNIT

1) Remove instrument panel lower cover.
2) Remove engine hood opener lever bracket.
3) Disconnect connector of turn signal and hazard unit.
4) Remove screw, and then remove turn signal and hazard unit from bracket.

B: DISASSEMBLY AND ASSEMBLY

1. COMBINATION SWITCH

Refer to 6-2 [W4C1] as for disassembly and assembly of combination switch.

C: INSPECTION

1. COMBINATION SWITCH (ON-CAR)

1) Remove instrument panel lower cover.
2) Remove lower column cover.

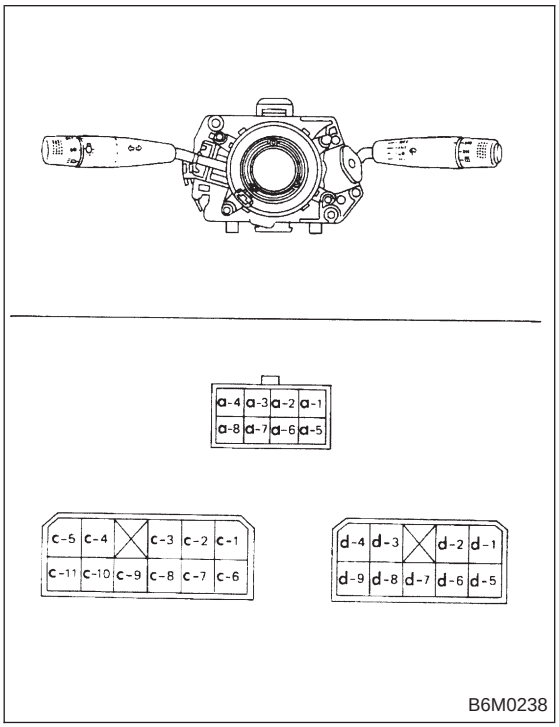

3) Unfasten holddown clip which secures harness, and disconnect connectors from body harness.
4) Move combination switch to respective positions and check continuity between terminals as indicated in table below:

Turn signal switch

Switch position	Terminal	a-5	a-7	a-6
Turn	L·L′	○	○	
	↕	x		x
	N			
	↕	x		x
	R·R′		○	○

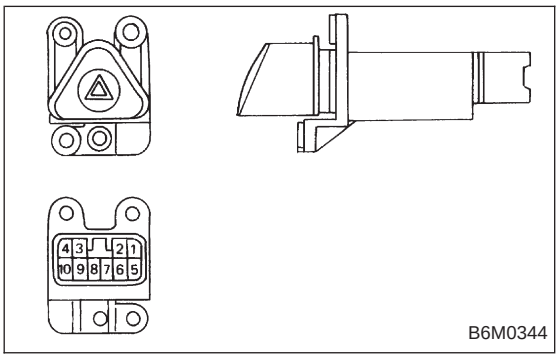

2. HAZARD SWITCH

Move hazard switch to each position and check continuity between terminals as indicated in table below:

	7	3	9	10	5	6	1		2
ON	○		○	○	○	○	○	⊖	○
OFF	○	○					○	⊖	○