2. Generator

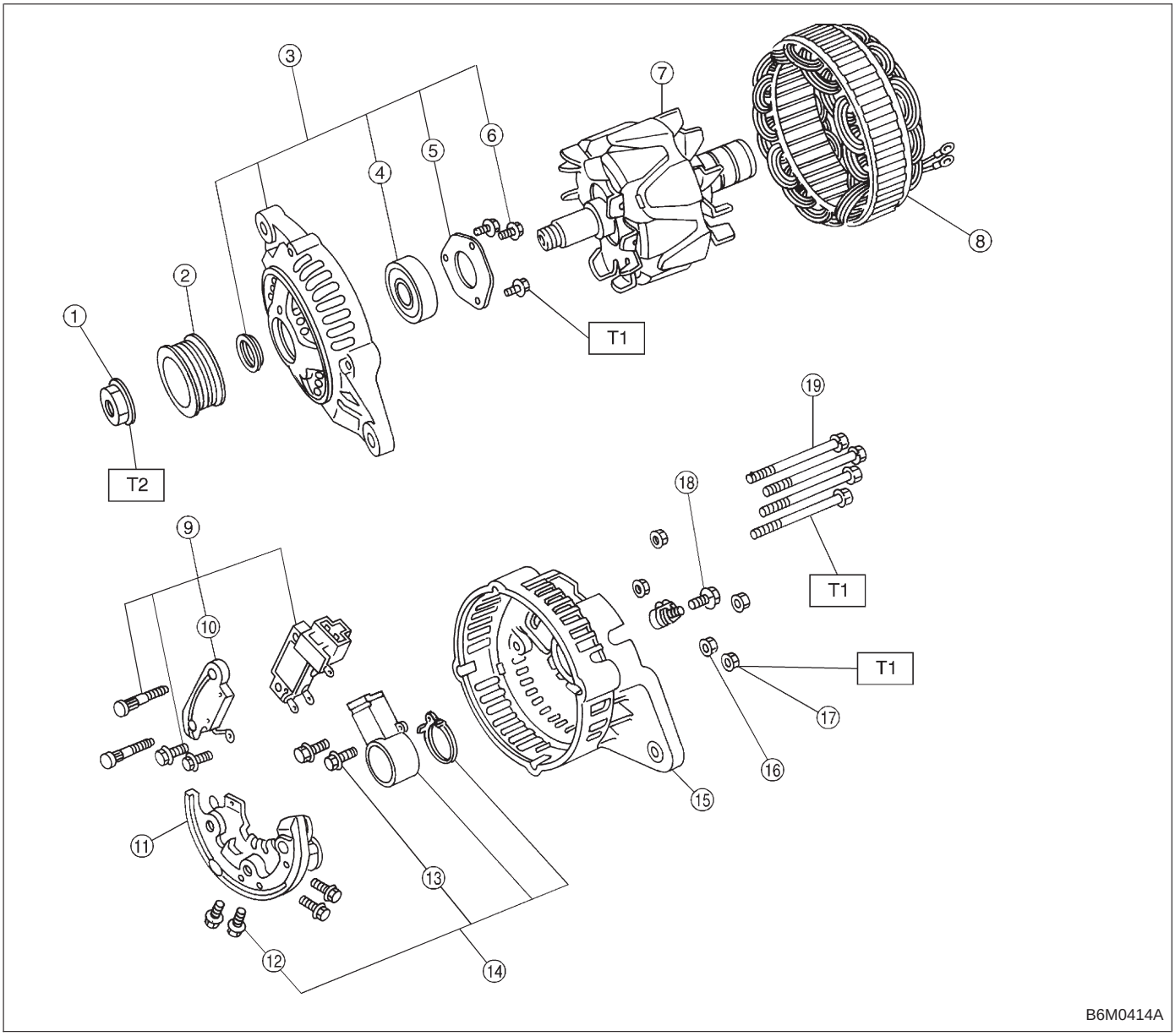

① Pulley nut
② Pulley
③ Front cover ASSY
④ Ball bearing
⑤ Bearing retainer
⑥ Screw
⑦ Rotor
⑧ Stator coil
⑨ IC regulator ASSY
⑩ Condenser
⑪ Diode ASSY
⑫ Bolt
⑬ Bolt
⑭ Brush holder ASSY
⑮ Rear cover
⑯ BAT. terminal
⑰ Nut
⑱ Bolt
⑲ Through bolt

Tightening torque: N·m (kg-m, ft-lb)
T1: 3.1 — 4.4 (0.32 — 0.45, 2.3 — 3.3)
T2: 63.7 — 83.4 (6.5 — 8.5, 47.0 — 61.5)