1. Starter

1. MT: 128000-8311

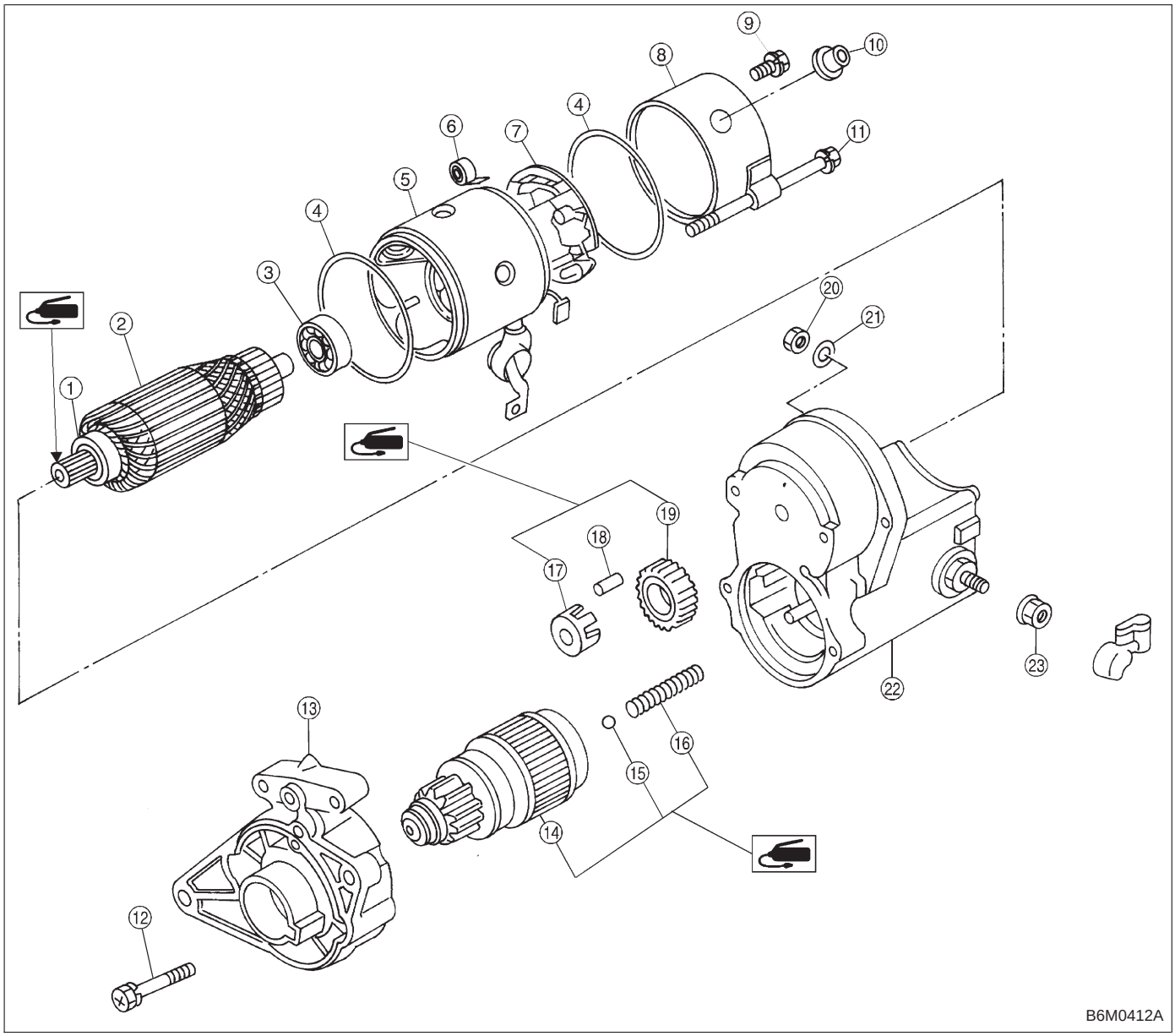

1. Front ball bearing
2. Armature
3. Rear ball bearing
4. O-ring
5. Yoke
6. Brush spring
7. Brush holder
8. End frame
9. Screw & washer
10. Cover
11. Through bolt
12. Screw & washer
13. Starter housing
14. Overrunning clutch
15. Steel ball
16. Spring
17. Retainer
18. Roller
19. Idle gear
20. Nut
21. Spring washer
22. Magnet switch
23. Nut

2. AT: 128000-8321

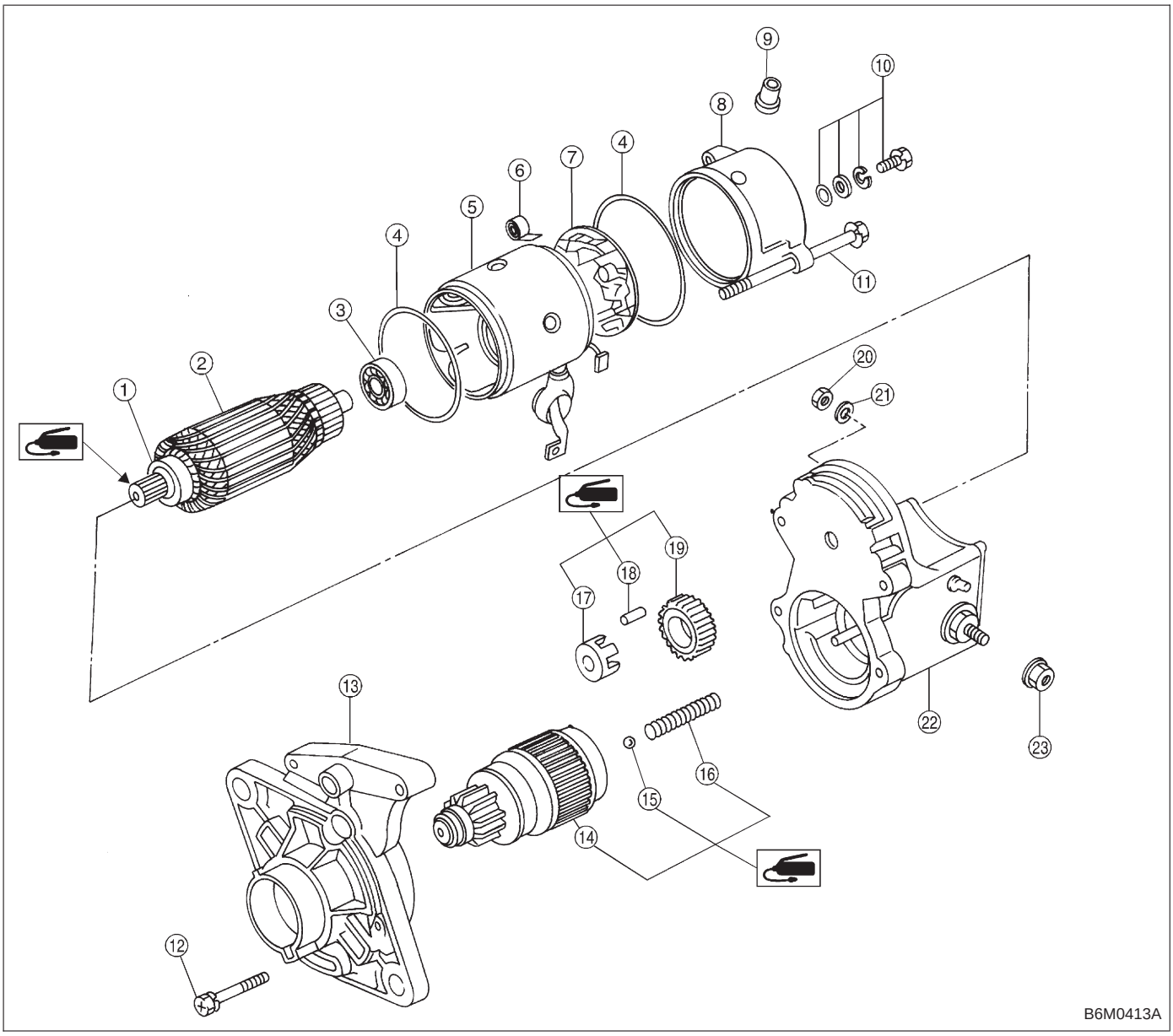

1. Front ball bearing
2. Armature
3. Rear ball bearing
4. O-ring
5. Yoke
6. Brush spring
7. Brush holder
8. End frame
9. Cover
10. Screw & washer
11. Through bolt
12. Screw & washer
13. Starter housing
14. Overrunning clutch
15. Steel ball
16. Spring
17. Retainer
18. Roller
19. Idle gear
20. Nut
21. Spring washer
22. Magnet switch
23. Nut