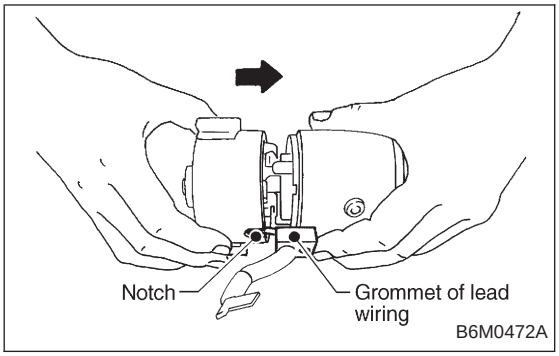

5) Installing end frame
When assembling end frame to yoke, align notched portion of end frame with lead wire grommet.

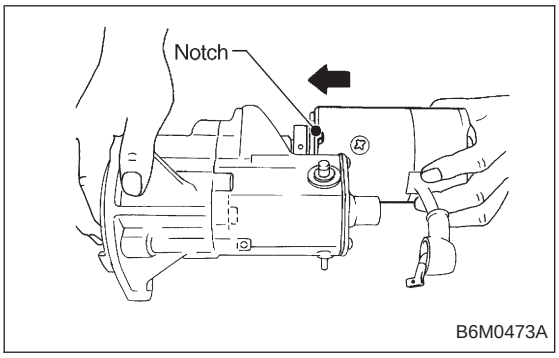

6) Installing yoke
When installing yoke to magnetic switch, align notch of yoke with protrusion of magnetic switch.

2. Generator

A: REMOVAL AND INSTALLATION

1) Disconnect battery ground cable.

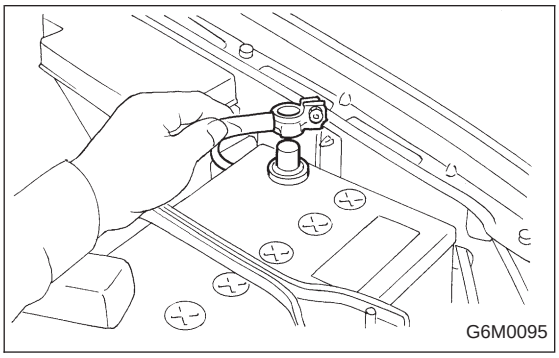

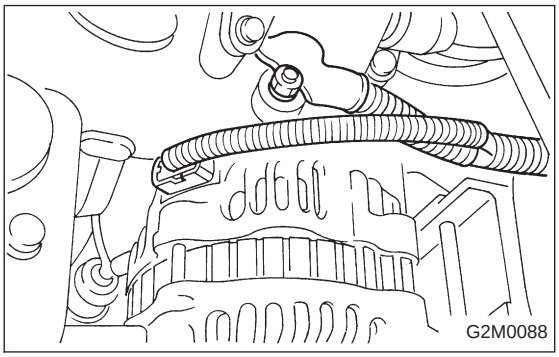

2) Disconnect connector and terminal from generator.

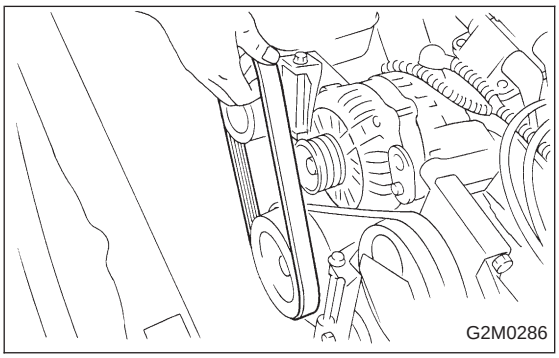

3) Remove V-belt cover.
4) Remove front side V-belt.

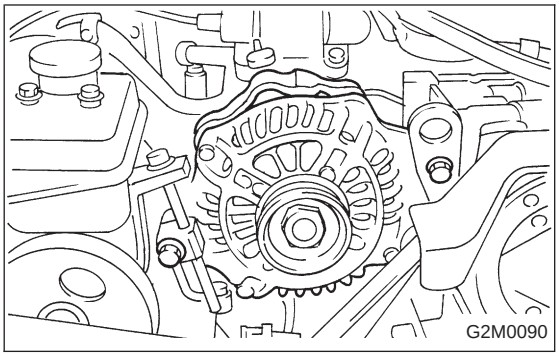

5) Remove bolts which install generator onto bracket.

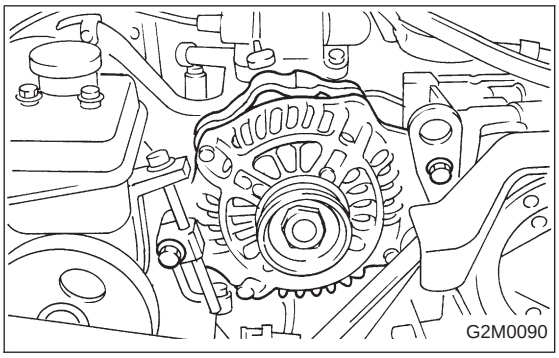

6) Installation is in the reverse order of removal.

CAUTION:
Check and adjust V-belt tension. <Ref. to 1-5 [01A0].>

B: DISASSEMBLY

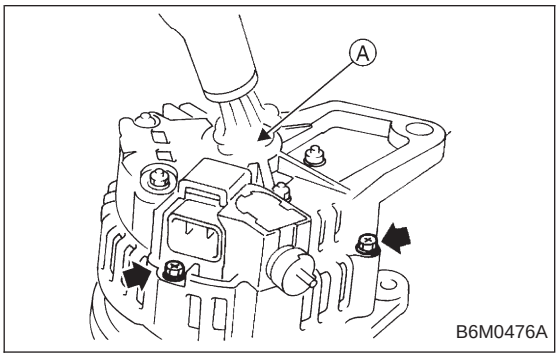

1) Heat the portion Ⓐ of rear cover to 50°C (122°F) with heater drier.

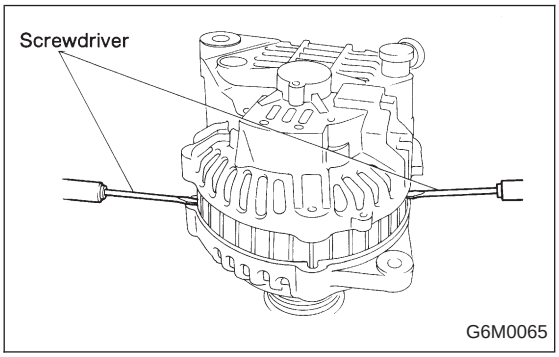

2) Remove the four through bolts. Then insert the tip of a flat-head screwdriver into the gap between the stator core and front bracket. Pry then apart to disassemble.

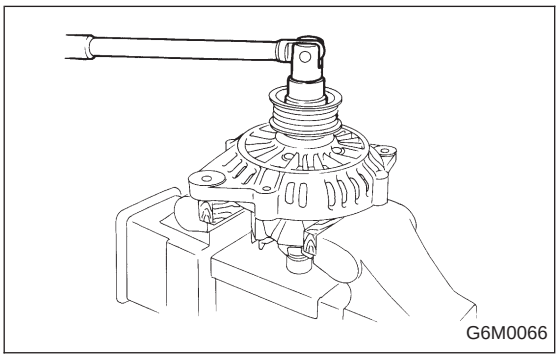

3) Hold rotor with a vise and remove pulley nut.

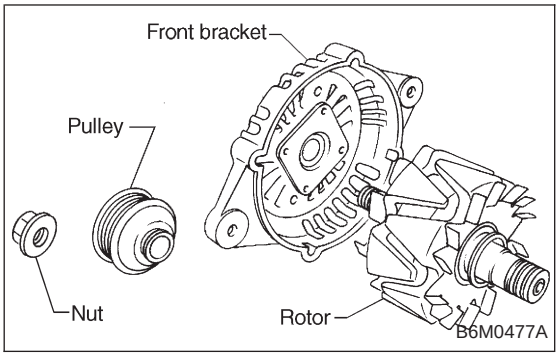

CAUTION:
When holding rotor with vise, insert aluminum plates or wood pieces on the contact surfaces of the vise to prevent rotor from damage.

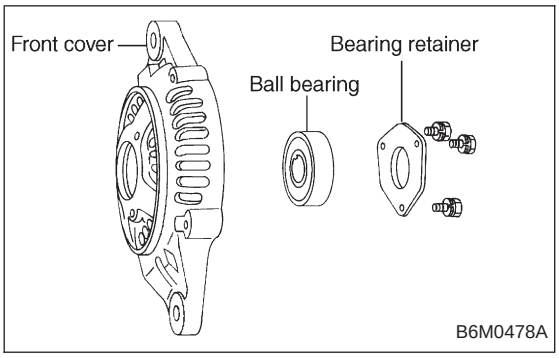

4) Remove rotor from front cover.
5) Remove three screws from front cover and then bearing retainer and ball bearing.

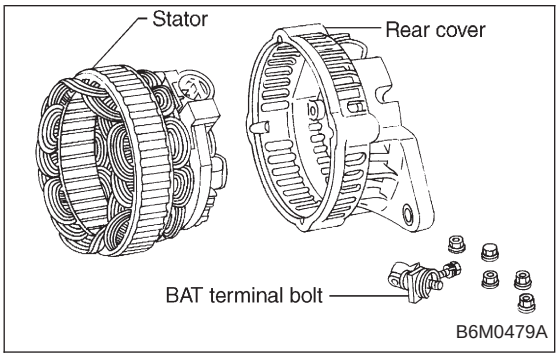

6) Remove bolt which secure battery terminal bolt, and remove rear cover. Remove nuts which secure diode plate, and remove stator and rear cover.

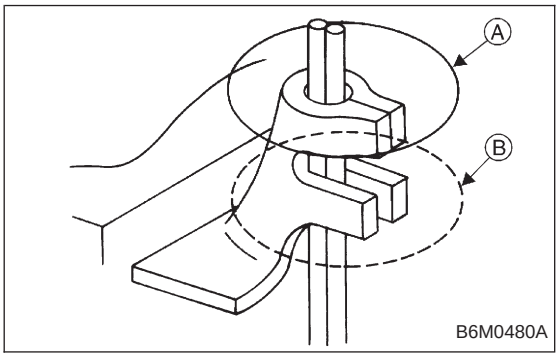

7) Separate diode plate from stator coil.
(1) Cut the connecting position Ⓐ of stator coil to diode.
(2) Unsolder connection Ⓑ and throughout the lead wire of stator coil.

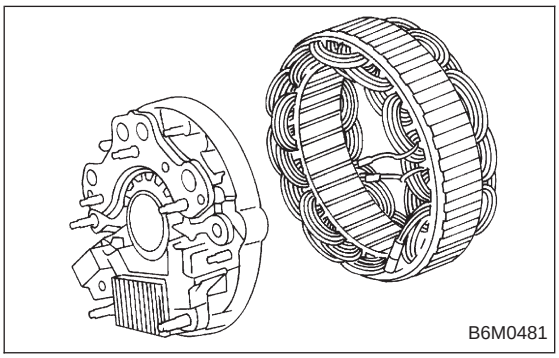

(3) Remove stator coil from diode plate.

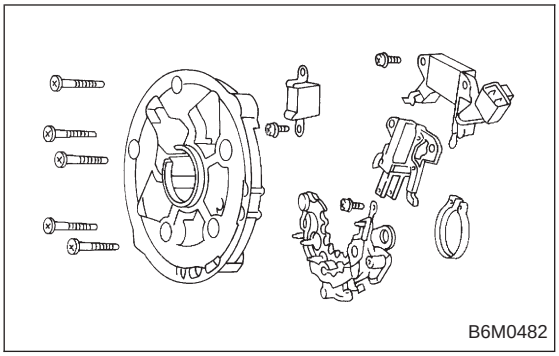

8) Remove bolts which secure IC regulator, diode and brush holder.

CAUTION:
Do not apply a shock or load to IC regulator cooling fins.

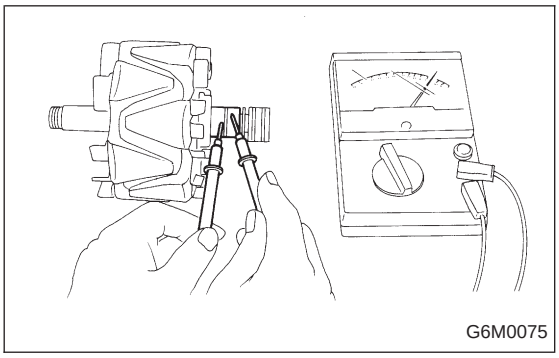

C: INSPECTION AND REPAIR

1. ROTOR

1) Slip ring surface
Inspect slip rings for contamination or any roughness of the sliding surface.
Clean or polish with #500 to #600 emery paper if defective.

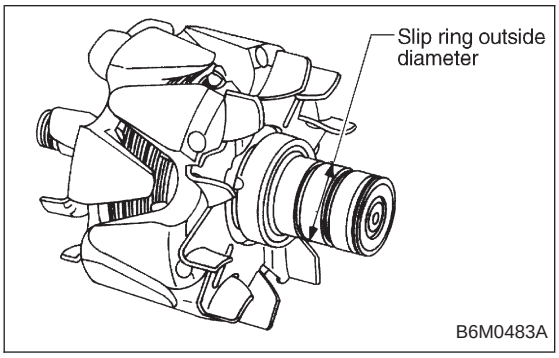

2) Slip ring outside diameter
Measure slip ring outside diameter. If slip ring is worn, replace rotor.

Slip ring outside diameter:
Standard
27 mm (1.06 in)
Limit
26 mm (1.02 in)

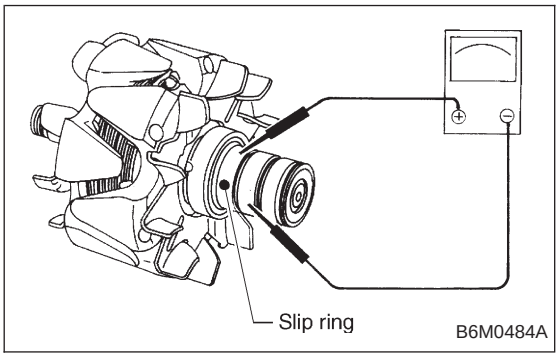

3) Continuity test
Check continuity between slip rings. If continuity does not exist, replace rotor.

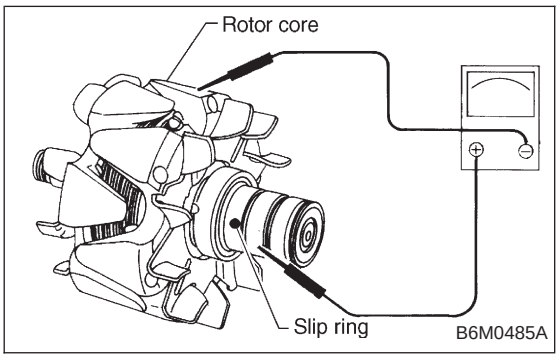

4) Insulation test
Check continuity between slip ring and rotor core or shaft. If continuity exists, replace rotor.

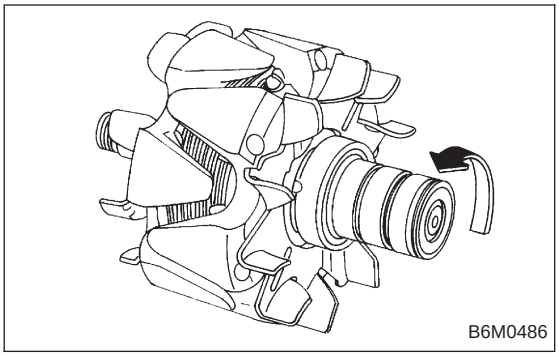

5) Ball bearing
Check rear ball bearing. Replace it if it is noisy or if rotor does not turn smoothly.

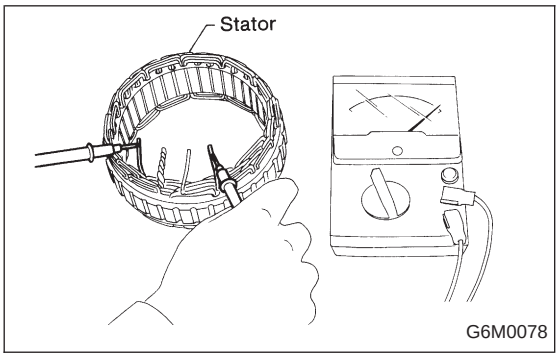

2. STATOR

1) Continuity test
Inspect stator coil for continuity between its terminals. When there is no continuity between individual terminals, cable is broken.
Replace stator coil.

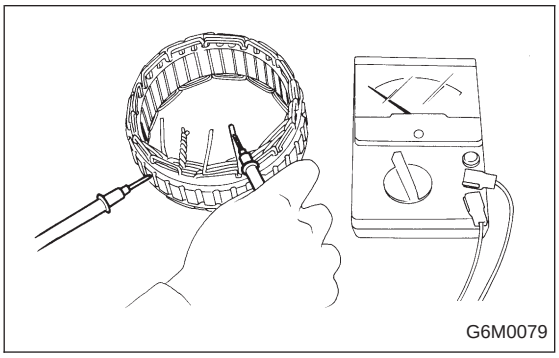

2) Insulation test
Inspect stator coil for continuity between stator core and each terminal. If there is continuity, replace stator coil.

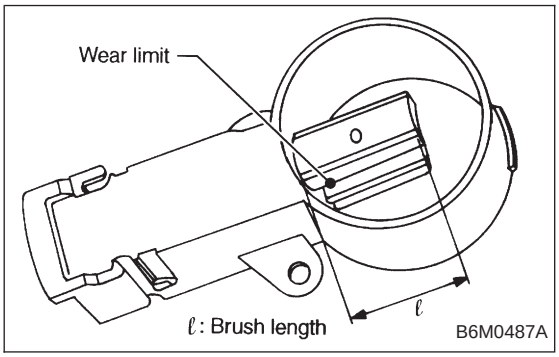

3. BRUSH

Measure brush length. If brush is worn, replace brush holder assembly.

Brush length (ℓ):
Standard
20.5 mm (0.807 in)
Limit
1.5 mm (0.059 in)

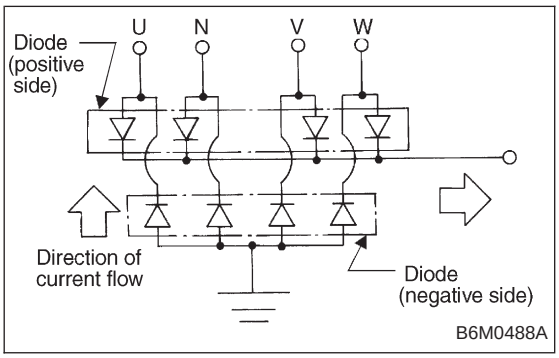

4. DIODE ASSEMBLY

The diode consists of eight diodes, four each being located on the positive and negative sides. The diode is necessary to restrict current flow to one direction.
Check all diodes, for continuity. If any diode is faulty, replace diode assembly.

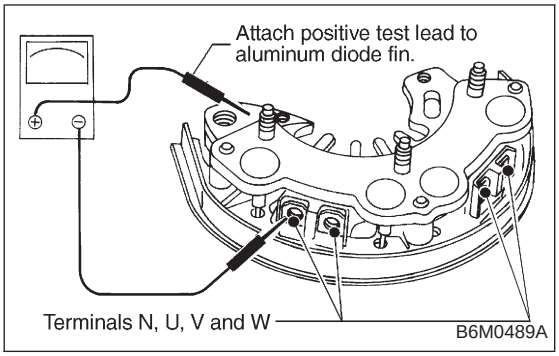

1) Diodes on "+" side

Continuity of proper diodes on "+" side

BAT side Terminal N, U, V and W	(+)	(−)
(+)	—	Continuity must not exist.
(−)	Continuity must exist.	—

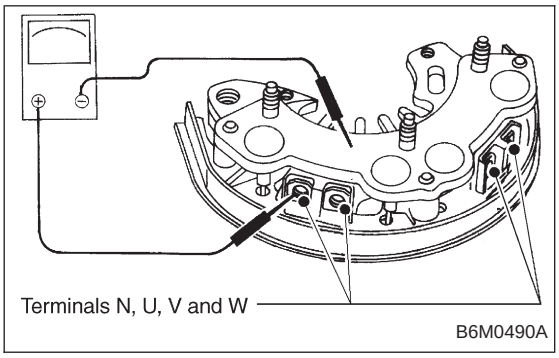

2) Diodes on "−" side

Continuity of proper diodes on "−" side

"E" side Terminal N, U, V and W	(+)	(−)
(+)	—	Continuity must exist.
(−)	Continuity must not exist.	—

CAUTION:
Never use a high tension insulation tester, such as a meggar as it will damage diodes with its high tension.

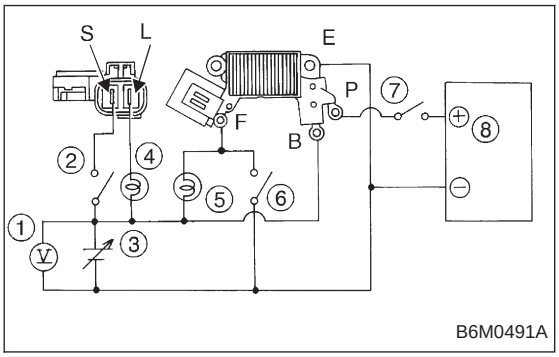

5. IC REGULATOR

1) Compose a circuit diagram as shown in figure.

① Voltage meter: 0 to 30 V
② Switch 1
③ Variable DC power supply: Variable 0 to 20 V, 1 A or more
④ Lamp 2
⑤ Lamp 1
⑥ Switch 3
⑦ Switch 2
⑧ Plus generator: Power supply 5 to 30 V, 1 kHz

2) Check operation as shown in chart below.

No.	Switch operation			Value of voltage meter	Lamp operation		Remarks
	1	2	3		1	2	
1	ON	OFF	OFF	12 V	DIM	ON	Check initial excitation.
2	ON	ON	OFF	12 V	ON or BLINK	OFF	Check total excitation.
3	ON	ON	OFF	16 V	OFF or DIM-BLINK	OFF	When value of voltage meter is between 12 V and 16 V.
4	OFF	ON	OFF	12 V	ON or BLINK	ON	Check connection for S and B terminals.
5	OFF	ON	ON	18 V	ON	ON	Check for over loading of voltage.

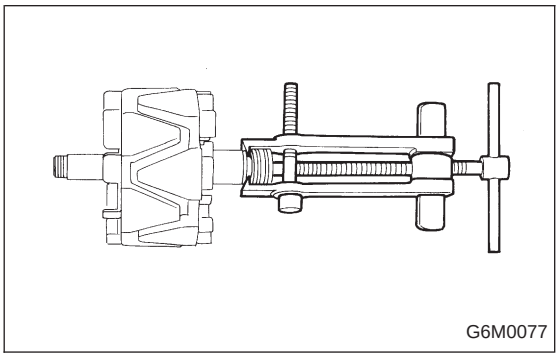
G6M0077

D: ASSEMBLY

Assembly is in the reverse order of disassembly procedures.

CAUTION:

- **When disassembling generator, replace rear ball bearing.**
- **When soldering starter coil to diode, do not touch lead wire with solder for more than 5 seconds.**

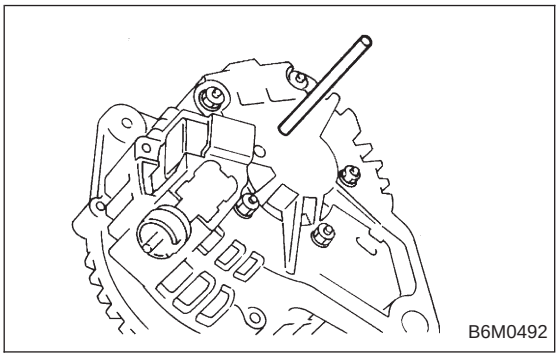
B6M0492

- **Before installing rear cover, insert pin from outside of rear cover so that holds brush. After installing rear cover, remove pin.**

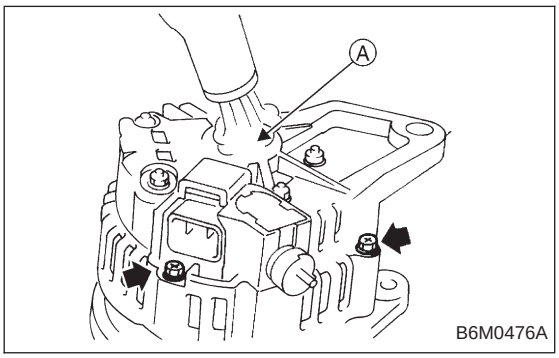

B6M0476A

- **When installing rear cover, heat portion Ⓐ to 50°C (122°F) with heater drier.**