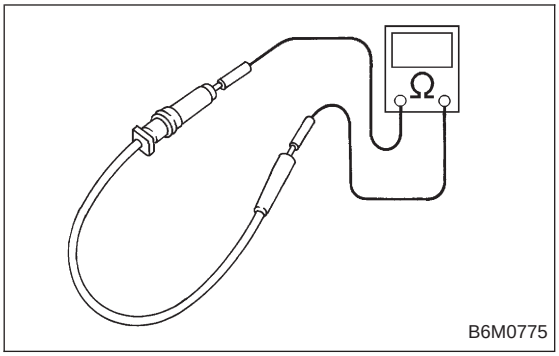

5. Spark Plug Cord

A: INSPECTION

Check for:
1) Damage to cords, deformation, burning or rust formation of terminals
2) Resistance values of cords

Resistance value:
5.12 — 12.34 kΩ

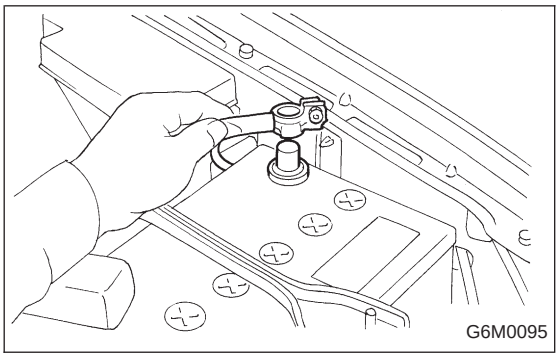

6. Ignitor

A: REMOVAL AND INSTALLATION

1) Disconnect battery ground cable.

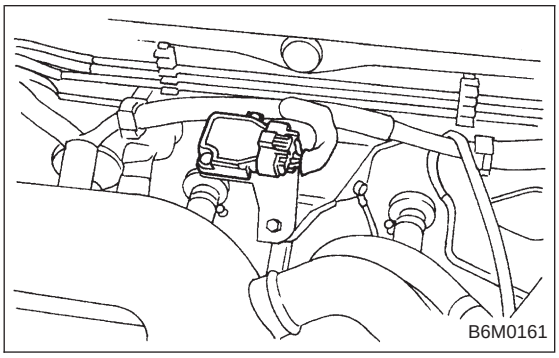

2) Disconnect connector from ignitor.
3) Remove screws which hold ignitor onto body.
4) Installation is in the reverse order of removal.