3. Spark Plug

A: REMOVAL AND INSTALLATION

CAUTION:
All spark plugs installed on an engine, must be of the same heat range.

Spark plug:
CHAMPION: RC10YC4
(Alternate)
NGK: BKR6E-11
NIPPONDENSO: K20PR-U11

1) Remove spark plug cords by pulling boot, not cord itself.
2) Remove spark plugs.
3) When installing spark plugs on cylinder head, use spark plug wrench.

Tightening torque (Spark plug):
20.6±2.9 N·m (2.10±0.30 kg-m, 15.19±2.14 ft-lb)

CAUTION:
The above torque should be only applied to new spark plugs without oil on their threads.
In case their threads are lubricated, the torque should be reduced by approximately 1/3 of the specified torque in order to avoid their over-stressing.

4) Connect spark plug cords.

B: INSPECTION

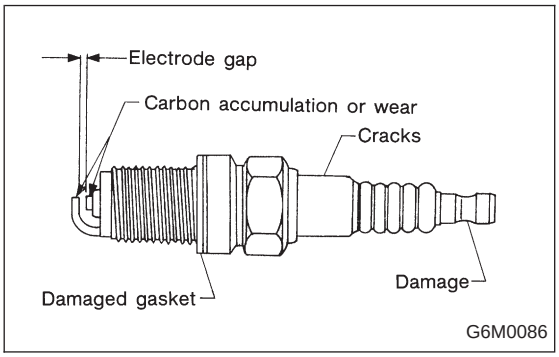

Check electrodes and inner and outer porcelain of plugs, noting the type of deposits and the degree of electrode erosion.

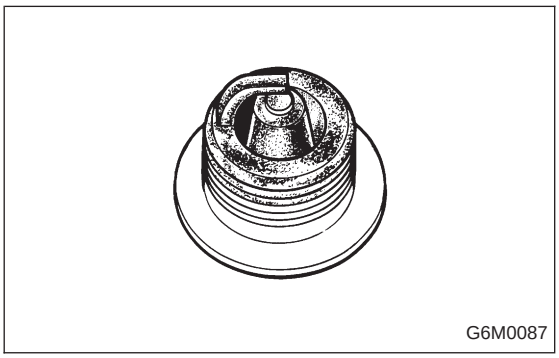

1) Normal
Brown to grayish-tan deposits and slight electrode wear indicate correct spark plug heat range.

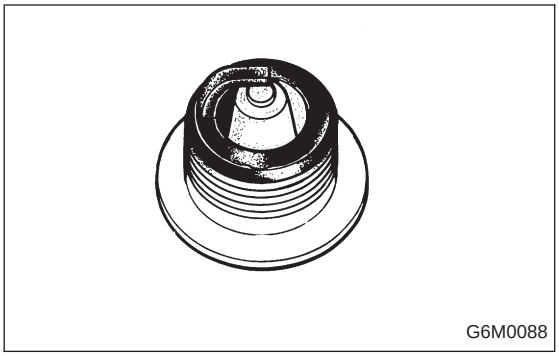

2) Carbon fouled
Dry fluffy carbon deposits on insulator and electrode are mostly caused by slow speed driving in city, weak ignition, too rich fuel mixture, dirty air cleaner, etc.
It is advisable to replace with plugs having hotter heat range.

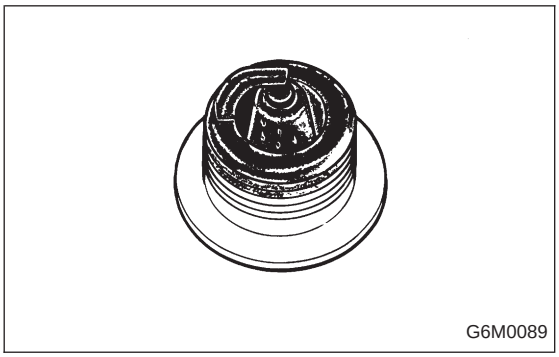

3) Oil fouled
Wet black deposits show excessive oil entrance into combustion chamber through worn rings and pistons or excessive clearance between valve guides and stems. If same condition remains after repair, use a hotter plug.

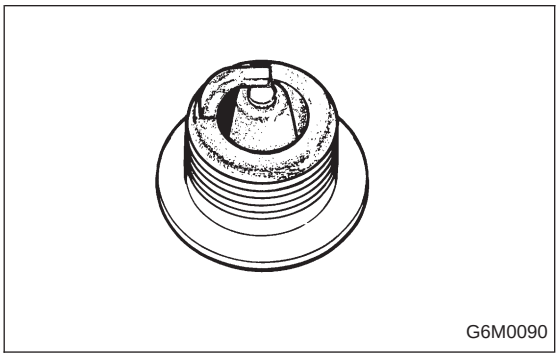

4) Overheating
White or light gray insulator with black or gray brown spots and bluish burnt electrodes indicate engine overheating. Moreover, the appearance results from incorrect ignition timing, loose spark plugs, wrong selection of fuel, hotter range plug, etc. It is advisable to replace with plugs having colder heat range.

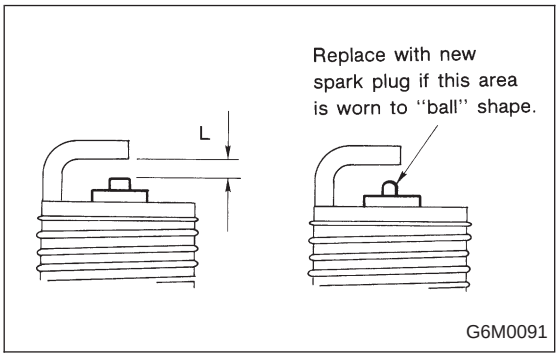

C: CLEANING AND REGAPPING

Clean spark plugs in a sand blast type cleaner.
Avoid excessive blasting. Clean and remove carbon or oxide deposits, but do not wear away porcelain.
If deposits are too stubborn, discard plugs.
After cleaning spark plugs, recondition firing surface of electrodes with file. Then correct the spark plug gap using a gap gauge.

Spark plug gap: L
1.0 — 1.1 mm (0.039 — 0.043 in)

D: REMOVAL AND INSTALLATION (2500 cc EXCEPT OUTBACK MODEL)

CAUTION:
All spark plugs installed on an engine, must be of the same heat range.

Spark plug:
NGK: PFR5B-11

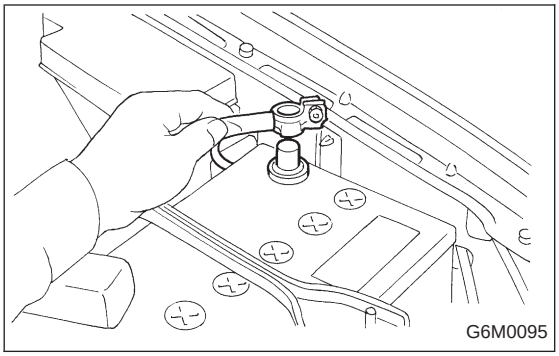

1. #1 SPARK PLUG

1) Disconnect battery ground cable.

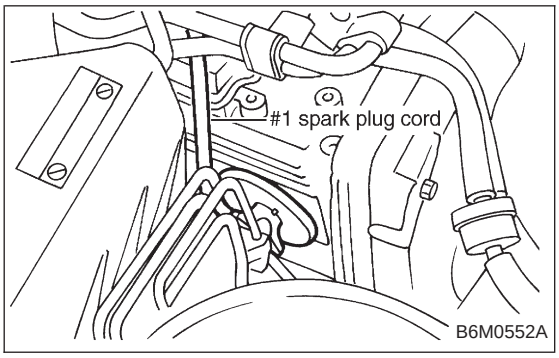

2) Remove #1 spark plug cord by pulling boot, not cord itself.

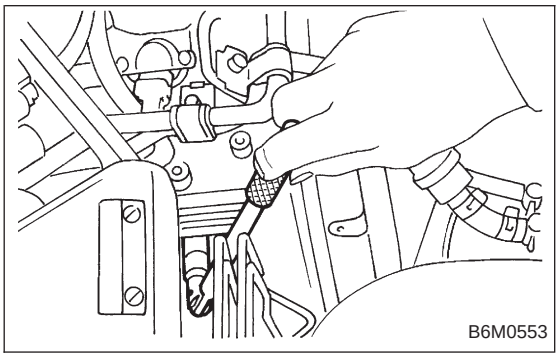

3) Remove spark plug with the spark plug socket.

4) Installation is in the reverse order of removal.

Tightening torque (Spark plug):
20.6±2.9 N·m (2.10±0.30 kg-m, 15.19±2.14 ft-lb)

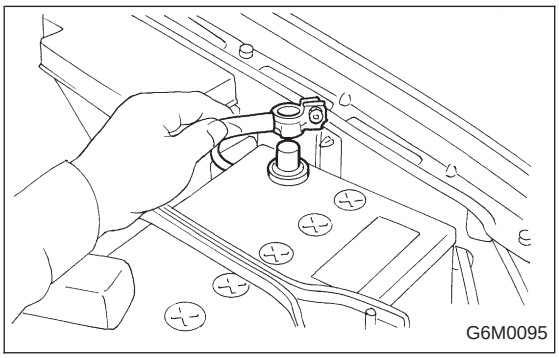

2. #2 SPARK PLUG

1) Disconnect battery ground cable.

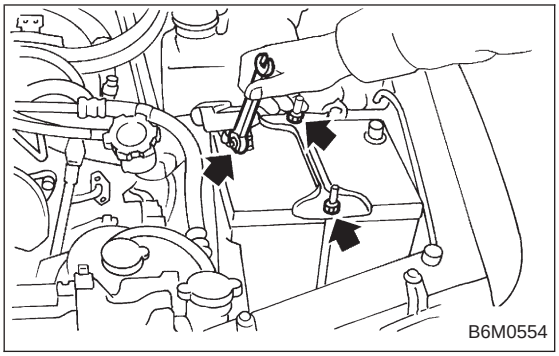

2) Remove battery.

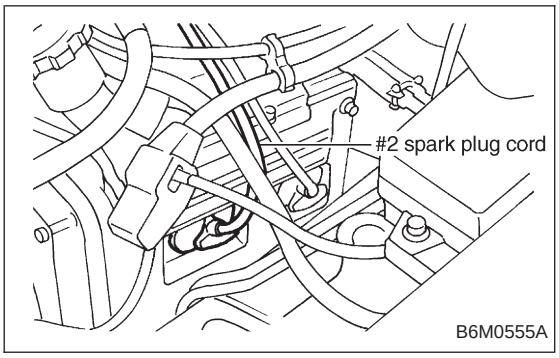

3) Remove #2 spark plug cord by pulling boot, not cord itself.

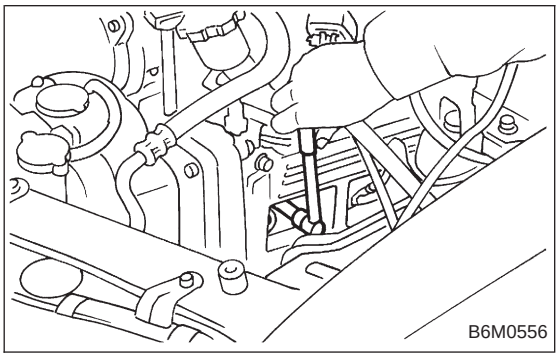

4) Remove spark plug with the spark plug socket.

5) Installation is in the reverse order of removal.

Tightening torque (Spark plug):
20.6±2.9 N·m (2.10±0.30 kg-m, 15.19±2.14 ft-lb)

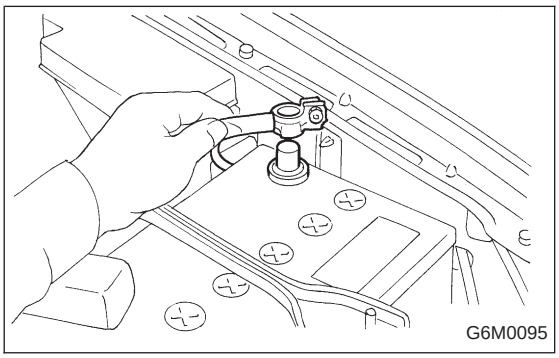

3. #3 SPARK PLUG

1) Disconnect battery ground cable.

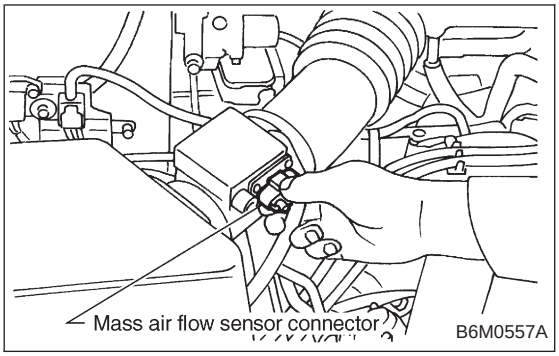

2) Disconnect mass air flow sensor connector.
3) Remove four clips securing air cleaner upper cover.

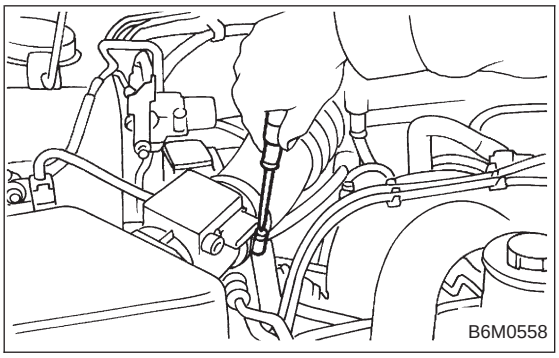

4) Loosen the clamp screw and separate air cleaner upper cover from air intake duct.
5) Remove air cleaner element.

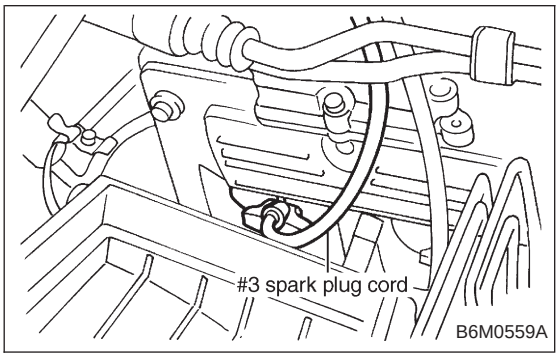

6) Remove #3 spark plug cord by pulling boot, not cord itself.

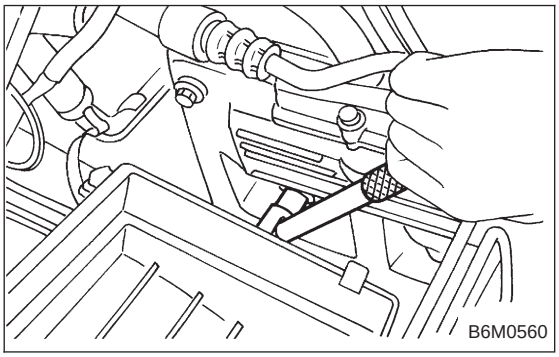

7) Remove spark plug with the spark plug socket.

8) Installation is in the reverse order of removal.

Tightening torque (Spark plug):
20.6±2.9 N·m (2.10±0.30 kg-m, 15.19±2.14 ft-lb)

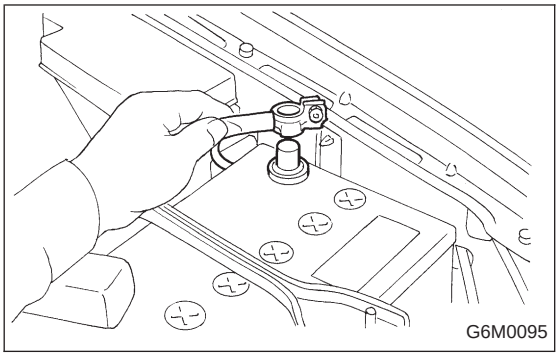

4. #4 SPARK PLUG

1) Disconnect battery ground cable.

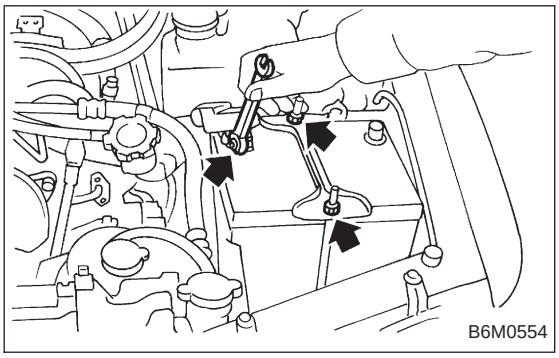

2) Remove battery.

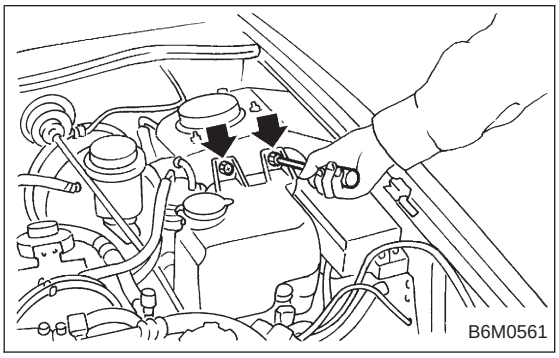

3) Remove washer tank mounting bolts.

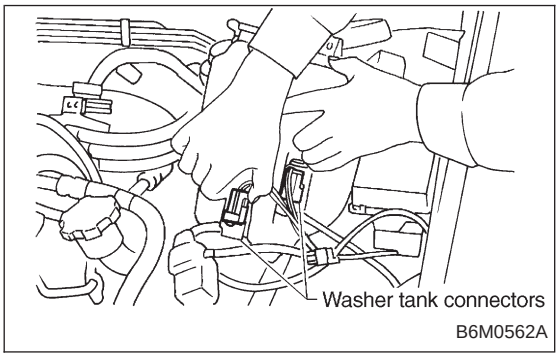

4) Disconnect washer tank connectors.

CAUTION:
Do not disconnect washer tank hoses as washer fluid will leak out from washer tank.

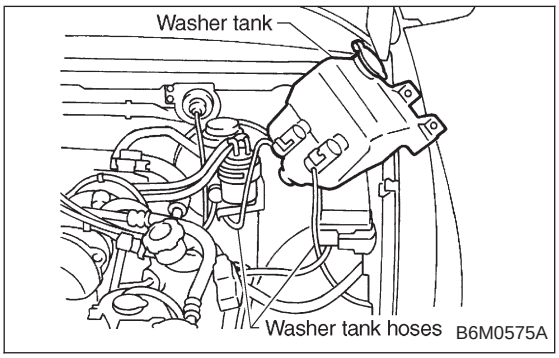

5) Move washer tank upward.

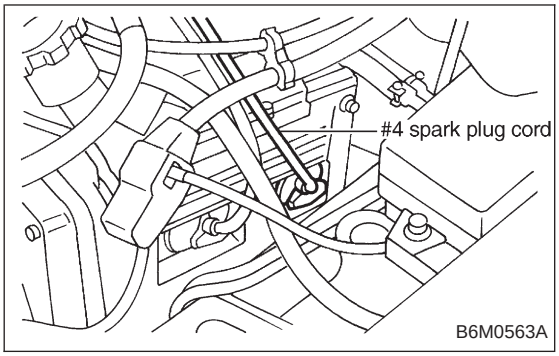

6) Remove #4 spark plug cord by pulling boot, not cord itself.

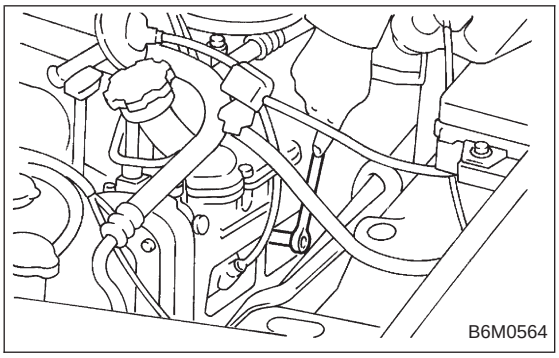

7) Remove spark plug with the spark plug socket.

8) Installation is in the reverse order of removal.

Tightening torque (Spark plug):
20.6±2.9 N·m (2.10±0.30 kg-m, 15.19±2.14 ft-lb)

CAUTION:
The above torque should be only applied to new spark plugs without oil on their threads.
In case their threads are lubricated, the torque should be reduced by approximately 1/3 of the specified torque in order to avoid over-stressing.

E: REMOVAL (2500 cc OUTBACK MODEL)

CAUTION:
All spark plugs installed on an engine, must be of the same heat range.

Spark plug:
NGK: PFR5B-11

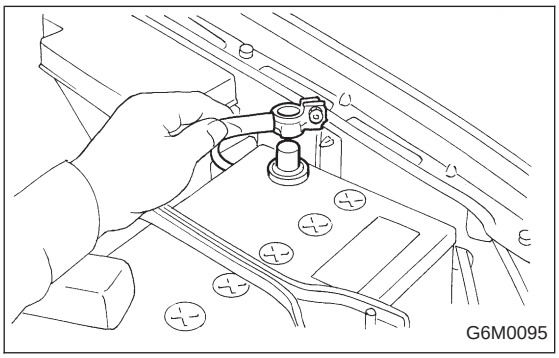

1. #1 SPARK PLUG

1) Disconnect battery ground cable.

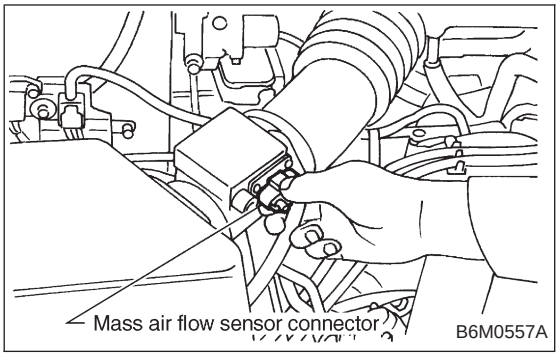

2) Disconnect mass air flow sensor connector.
3) Remove four clips securing air cleaner upper cover.

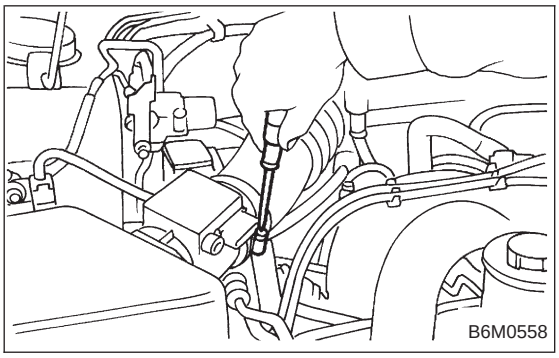

4) Loosen the clamp screw and separate air cleaner upper cover from air intake duct.

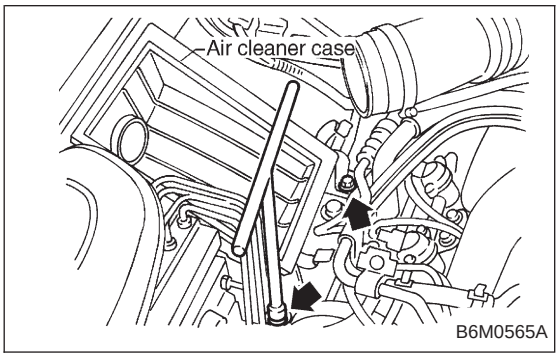

5) Remove air cleaner element and air cleaner case.

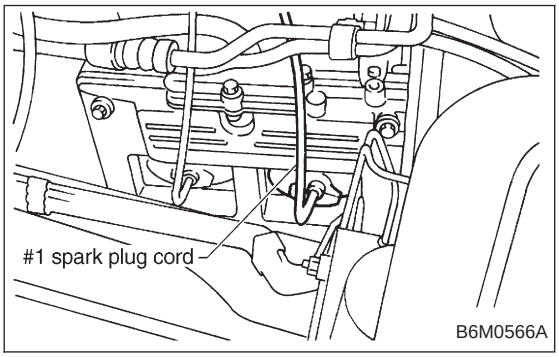

6) Remove #1 spark plug cord by pulling boot, not cord itself.

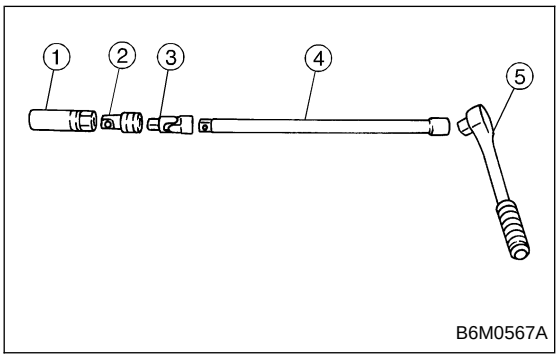

7) After connecting ① spark plug socket, ② extension and ③ Universal Joint to each other, securely set them over the spark plug in cylinder head.
8) Cover ABS pipes with rag to prevent damage.
① Spark plug socket 16 mm (5/8 in)
② Extension
③ Universal Joint
④ Extension
⑤ Ratchet

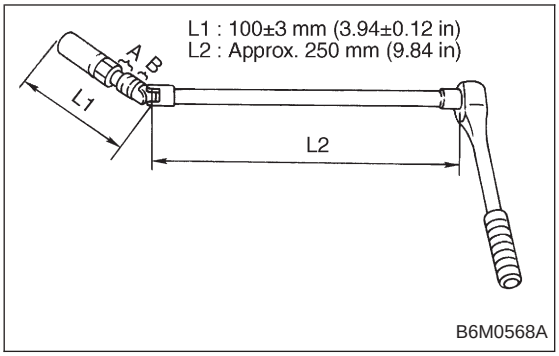

NOTE:
- Length L1 is important in making for easy removal.
- It may be necessary to wrap points A and B with vinyl tape to prevent them separating while working.
If they do separate, spark plug socket is left on the spark plug and it is very difficult to remove.
- An approximately 250 mm (9.84 in) long extension is recommended to be connected to ratchet.
- For spark plug socket, extension and Universal Joint, it is recommended to use the following tools.

Spark plug socket : PROTO 5020-50
Extension : SNAP-ON FX1
Universal Joint : SNAP-ON FU80B

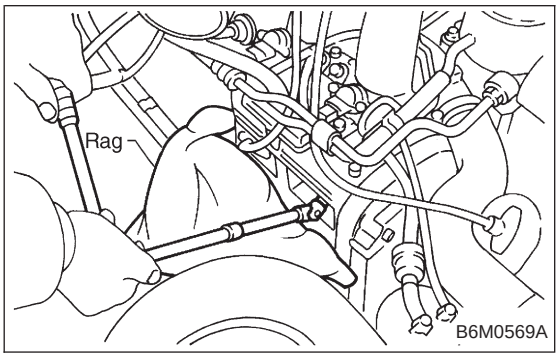

9) Set ④ extension and ⑤ ratchet in turn onto the connected tools in plug hole, and remove spark plug using them.

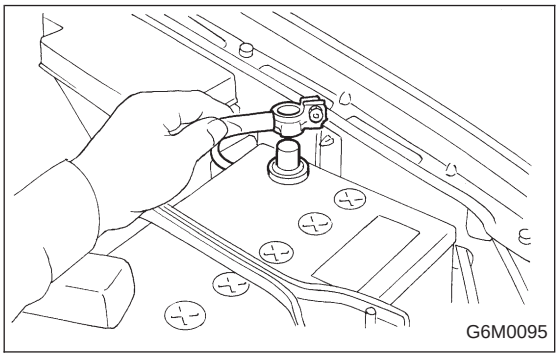

2. #2 SPARK PLUG

1) Disconnect battery ground cable.

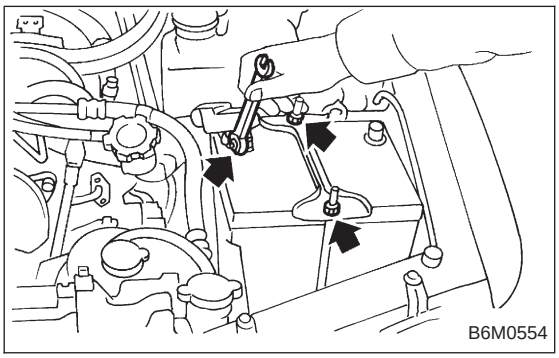

2) Remove battery.

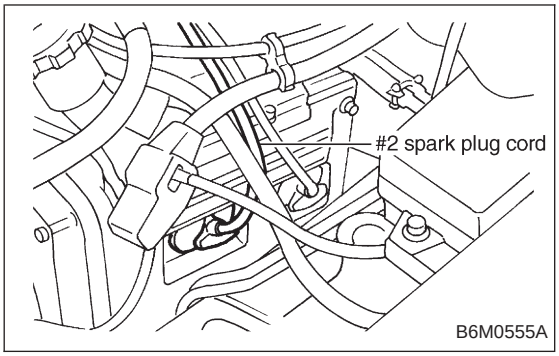

3) Remove #2 spark plug cord by pulling boot, not cord itself.
4) For subsequent procedures, refer to the procedure for #1 spark plug. <Ref. to 6-1 [W3E1].>

CAUTION:
When removing spark plug, cover the ATF cooling pipes with a rag to prevent damage.

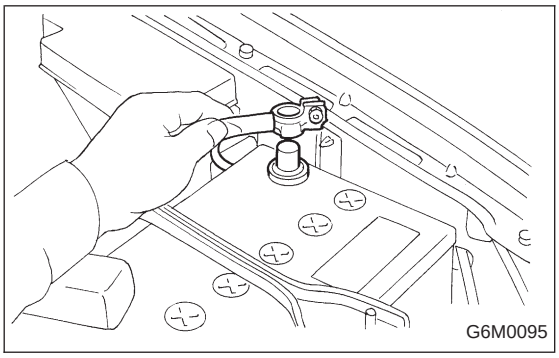

3. #3 SPARK PLUG

1) Disconnect battery ground cable.

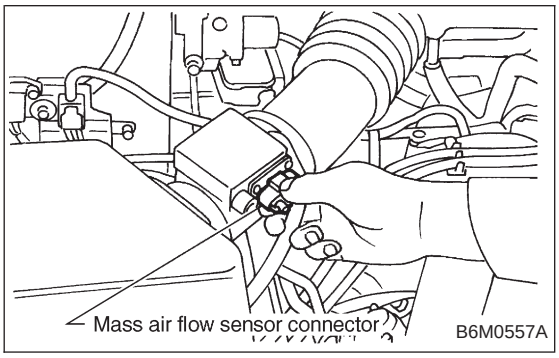

2) Disconnect mass air flow sensor connector.
3) Remove four clips securing air cleaner upper cover.

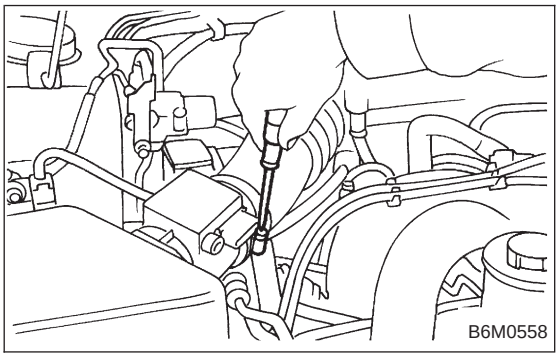

4) Loosen the clamp screw and separate air cleaner upper cover from air intake duct.

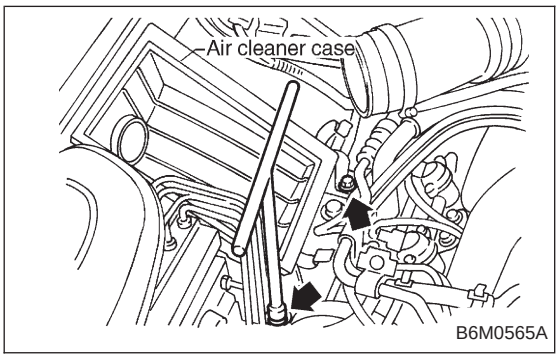

5) Remove air cleaner element and air cleaner case.

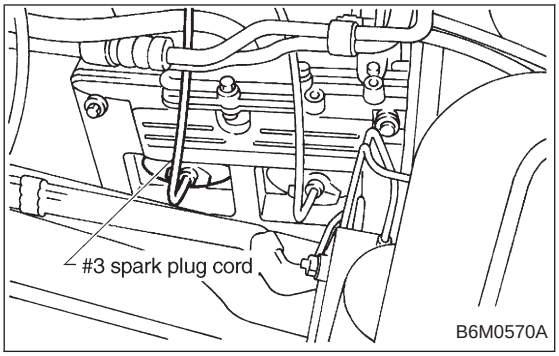

6) Remove #3 spark plug cord by pulling boot, not cord itself.
7) For subsequent procedures, refer to the procedure for #1 spark plug. <Ref. to 6-1 [W3E1].>

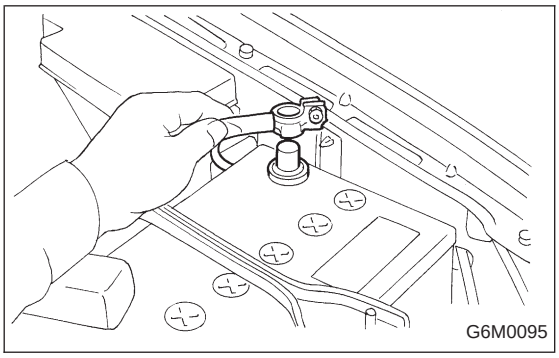

4. #4 SPARK PLUG

1) Disconnect battery ground cable.

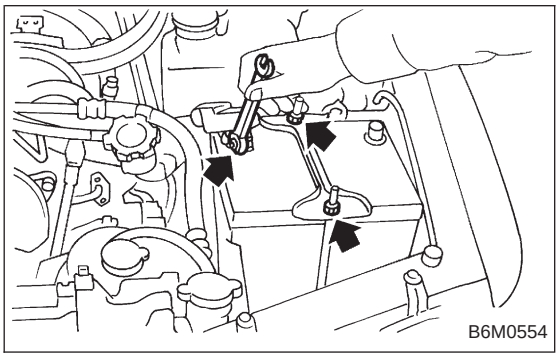

2) Remove battery.

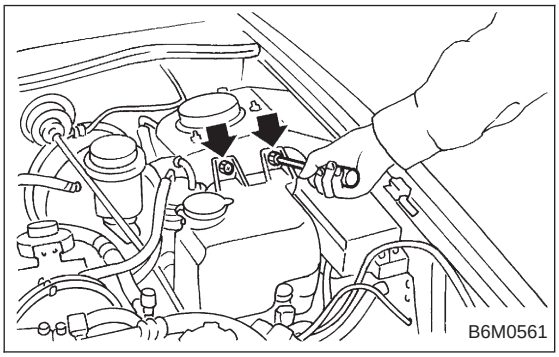

3) Remove washer tank mounting bolts.

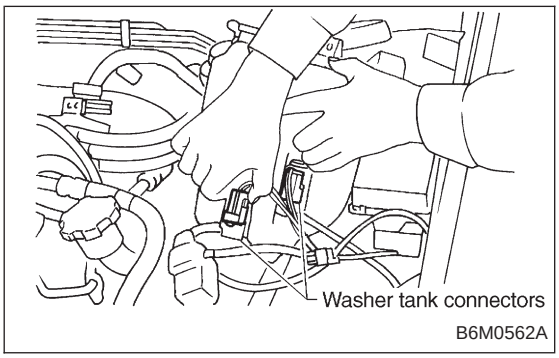

4) Disconnect washer tank connectors.

CAUTION:
Do not disconnect washer tank hoses as washer fluid will leak out from washer tank.

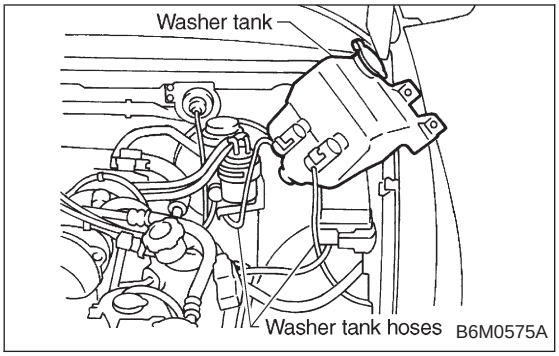

5) Move washer tank upward.

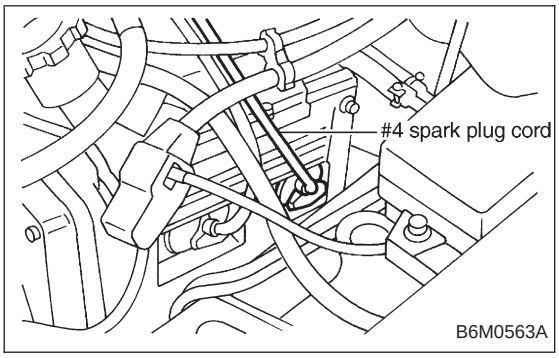

6) Remove #4 spark plug cord by pulling boot, not cord itself.
7) For subsequent procedures, refer to the procedure for #1 spark plug. <Ref. to 6-1 [W3E1].>

CAUTION:
When removing spark plug, cover the ATF cooling pipes with a rag to prevent damage.

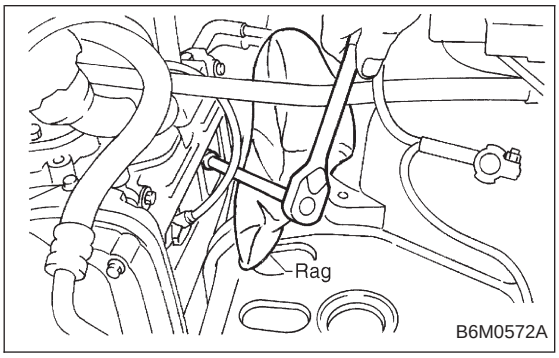

NOTE:
For easier removal of spark plug, diagonally insert the tools from the direction of battery stand into plug hole as shown in figure.

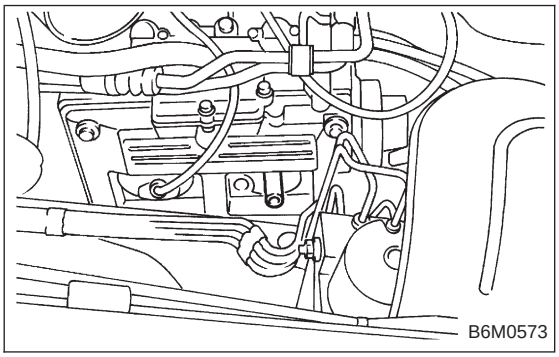

F: INSTALLATION (2500 cc OUTBACK MODEL)

1. #1 SPARK PLUG

1) After setting spark plug in spark plug socket, connect the spark plug socket, extension and Universal Joint to each other. <Ref. to 6-1 [W3E1].>
2) Screw spark plug into cylinder head using the connected tools above mentioned. At this point, it is necessary to support the rear end of the tools with fingertips.
3) When spark plug is screwed in two or three turns, temporarily disconnect the tools connected in step 1) above.
4) Confirm that spark plug is screwed into the cylinder head properly by touching it with finger. If it is difficult to reach it by hand, confirm its condition by using mirror and suchlike.
5) Cover ABS pipes with rag to prevent damage.

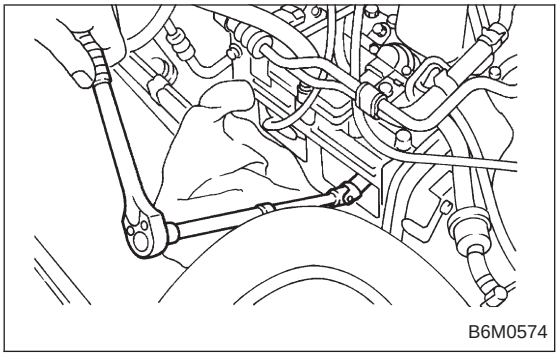

6) Re-insert the tools disconnected in step 3) into plug hole, and set them again over the spark plug.
7) Set extension and ratchet in turn onto the connected tools in plug hole, and tighten spark plug to the specified torque.

Tightening torque (spark plug):
20.6±2.9 N·m (2.10±0.30 kg-m, 15.19±2.14 ft-lb)

CAUTION:
The above torque should be only applied to new spark plugs without oil on their threads.
In case their threads are lubricated, the torque should be reduced by approximately 1/3 of the specified torque in order to avoid over-stressing.

8) The subsequent procedures are in reverse order of #1 spark plug removal. <Ref. to 6-1 [W3E1].>

2. #2 SPARK PLUG

CAUTION:
When installing spark plug, cover the ATF cooling pipes with a rag to prevent damage.

1) Carry out steps 1), 2), 3), 4), 6) and 7) of #1 spark plug installation procedure. <Ref. to 6-1 [W3F1].>
2) Proceed in reverse order of #2 spark plug removal. <Ref. to 6-1 [W3E2].>

3. #3 SPARK PLUG

1) Carry out steps 1) through 7) of #1 spark plug installation procedure. <Ref. to 6-1 [W3F1].>
2) Proceed in reverse order of #3 spark plug removal. <Ref. to 6-1 [W3E3].>

4. #4 SPARK PLUG

CAUTION:
When installing spark plug, cover the ATF cooling pipes with a rag to prevent damage.

1) Carry out steps 1), 2), 3), 4), 6) and 7) of #1 spark plug installation procedure. <Ref. to 6-1 [W3F1].>
2) Proceed in reverse order of #4 spark plug removal. <Ref. to 6-1 [W3E4].>