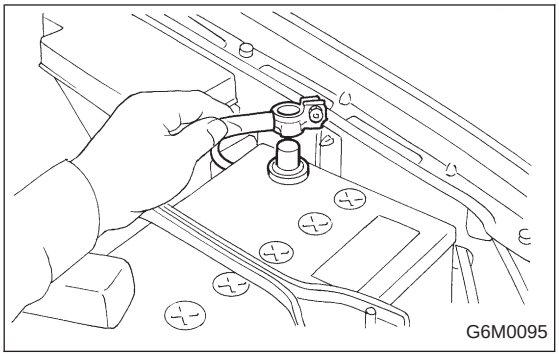

1. Starter

A: REMOVAL AND INSTALLATION

1) Disconnect battery ground cable.

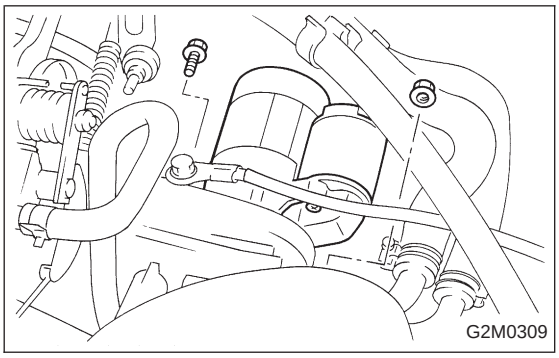

2) Disconnect connector and terminal from starter.
3) Remove starter from transmission.
4) Installation is in the reverse order of removal.

Tightening torque:
50±4 N·m (5.1±0.4 kg-m, 36.9±2.9 ft-lb)

B: TEST

1. MAGNETIC SWITCH

CAUTION:
- **The following magnetic switch tests should be performed with specified voltage applied.**
- **Each test should be conducted within 3 to 5 seconds. Power to be furnished should be one-half the rated voltage.**

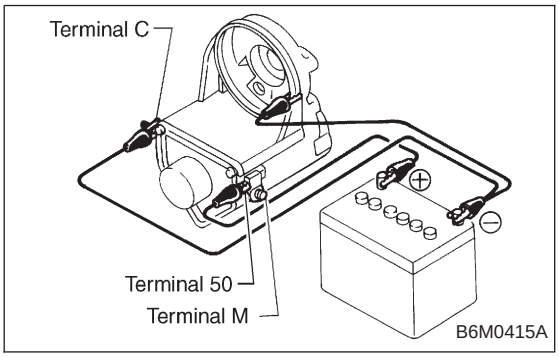

1) Pull-in test
Connect two battery negative leads onto magnetic switch body and terminal C respectively. Then connect battery positive lead onto terminal 50. Pinion should extend when lead connections are made.

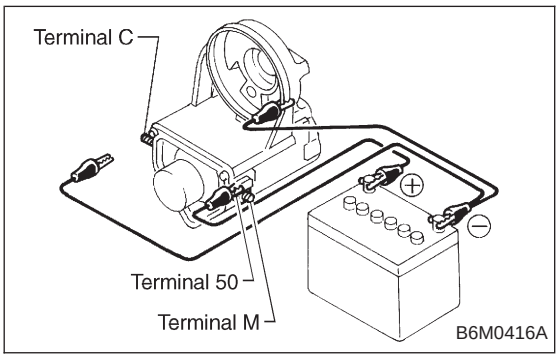

2) Holding-in test
Disconnect lead from terminal C with pinion extended. Pinion should be held in the extended position.

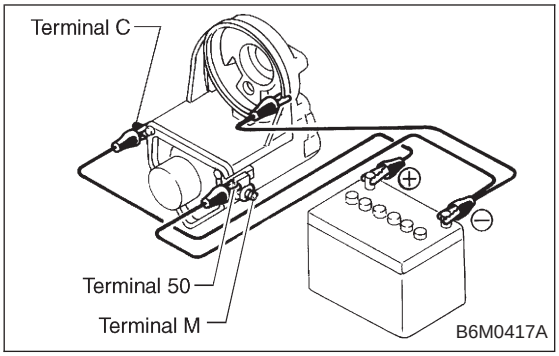

3) Return test
Connect two battery negative leads onto terminal 50 and onto switch body respectively. Then connect battery positive lead onto terminal C. Next, disconnect lead from terminal 50. Pinion should return immediately.

2. PERFORMANCE TEST

The starter is required to produce a large torque and high rotating speed, but these starter characteristics vary with the capacity of the battery. It is therefore important to use a battery with the specified capacity whenever testing the starter.
The starter should be checked for the following three items:
1. No-load test
Measure the maximum rotating speed and current under a no-load state.
2. Load test
Measure the magnitude of current needed to generate the specified torque and rotating speed.
3. Stall test
Measure the torque and current when the armature is locked.

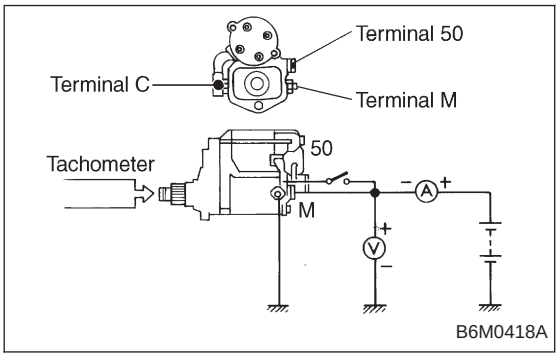

1) No-load test
Run single starter under no-load state, and measure its rotating speed, voltage, and current, using the specified battery. Measured values must meet the following standards:

No-load test (Standard):
Voltage/Current
11 V/90 A, or more
Rotating speed
TN128000-8311: 3,000 rpm, or more
TN128000-8321: 3,350 rpm, or more

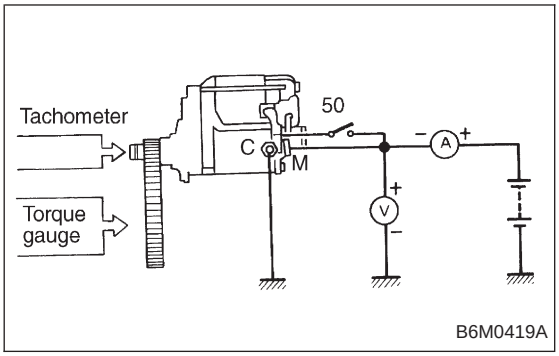

2) Load test (For reference)
Perform this test to check maximum output of starter. Use test bench which is able to apply load (brake) to starter. Measure torque value and rotating speed under the specified voltage and current conditions while controlling braking force applied to starter.

CAUTION:
Change engagement position of overrunning clutch and make sure it is not slipping.

Load test (Standard):
TN128000-8311
Voltage/Load
8 V/9.8 N·m (1.0 kg-m, 7.2 ft-lb)
Current/Speed
280 A max./900 rpm min.

TN128000-8321
Voltage/Load
8 V/13.7 N·m (1.4 kg-m, 10.1 ft-lb)
Current/Speed
370 A, or less/880 rpm, or more

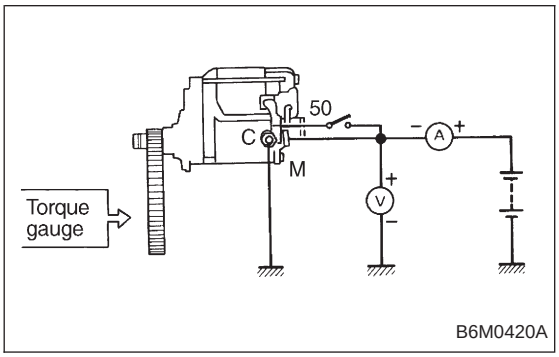

3) Stall test
Using the same test equipment used for load test, apply brake to lock starter armature. Then measure voltage, current, and torque values.
Measured values must meet the following standard.

Stall test (Standard):
TN128000-8311
Voltage/Current
5 V/800 A, or less
Torque
27.5 N·m (2.8 kg-m, 20.3 ft-lb) min.

TN128000-8321
Voltage/Current
5 V/1,050 A, or less
Torque
27.5 N·m (2.8 kg-m, 20.3 ft-lb) min.

NOTE:
Low rotating speed or excessive current during no-load test may be attributable to high rotating resistance of starter due to improper assembling.
Small current and no torque during stall test may be attributable to excessive contact resistance between brush and commutator; whereas, normal current and insufficient torque may be attributable to shorted commutator or poor insulation.
Starter can be considered normal if it passes no-load and stall tests; therefore, load test may be omitted.

C: DISASSEMBLY

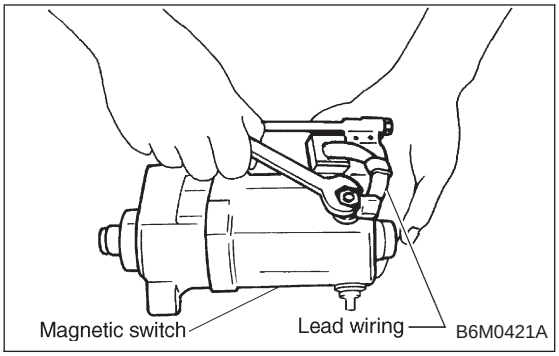

1) Disconnect lead wire from magnetic switch.

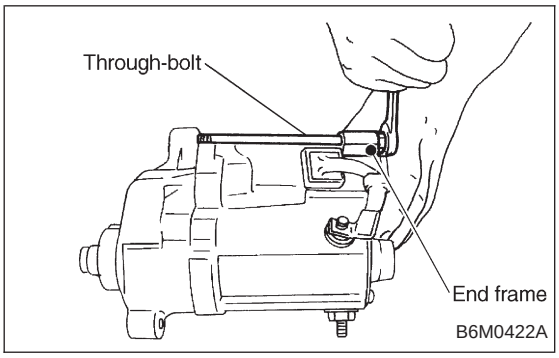

2) Remove through-bolts from end frame.

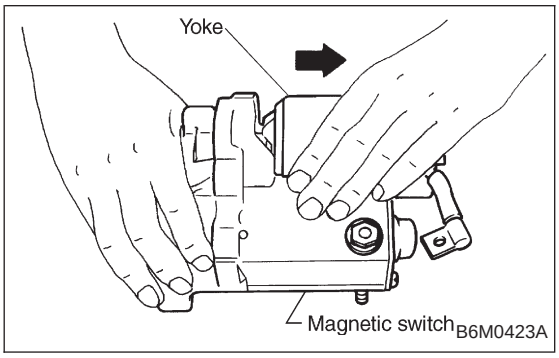

3) Remove yoke from magnetic switch.

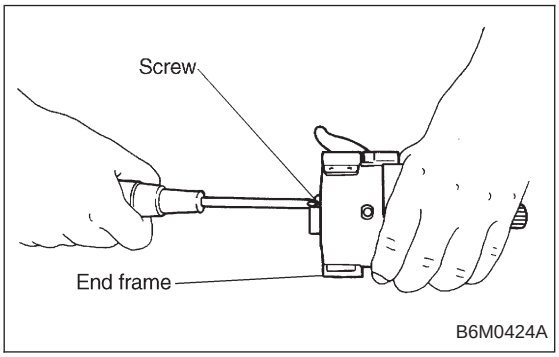

4) Remove screws securing end frame to brush holder.

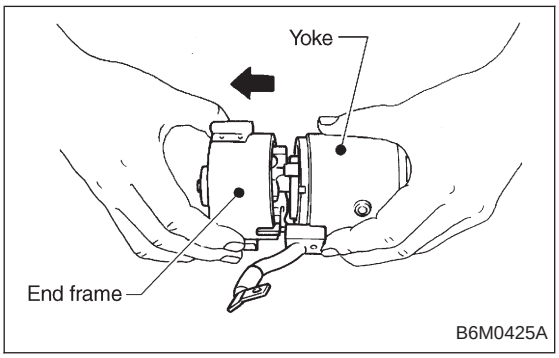

5) Separate yoke from end frame.

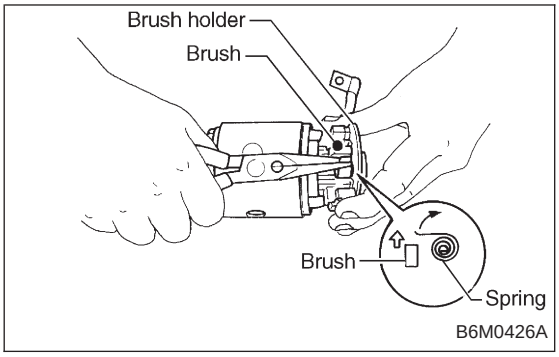

6) Remove brush by lifting up positive (+) side brush spring using long-nose pliers.

CAUTION:
Be careful not to damage brush and commutator.

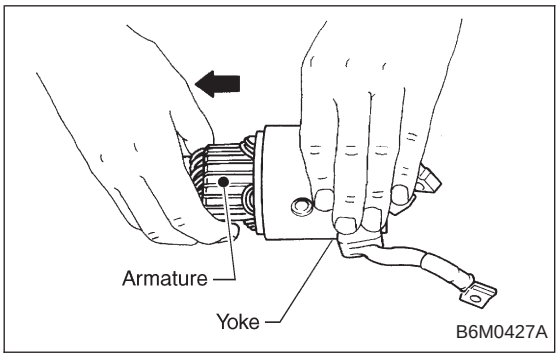

7) Remove armature from yoke.

CAUTION:
Be careful not to drop armature.

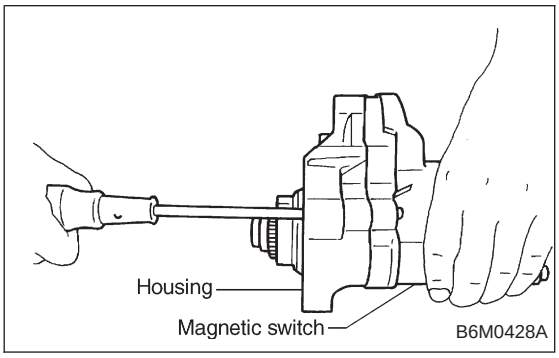

8) Remove screws securing magnetic switch to housing.

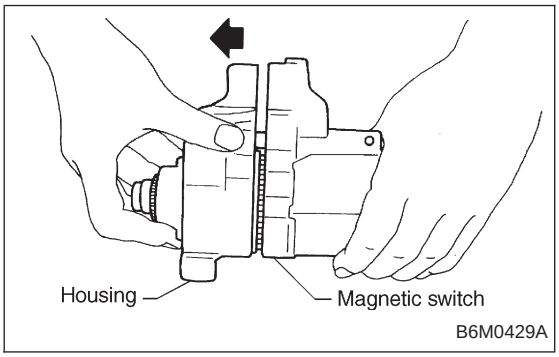

9) Remove housing from magnetic switch.

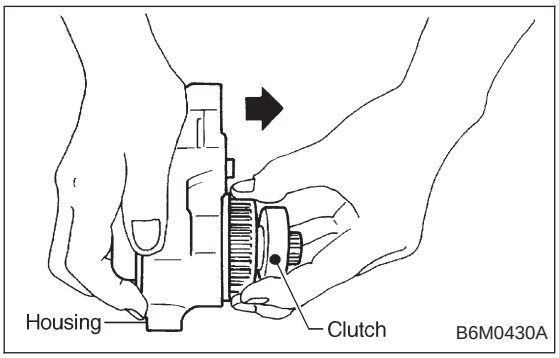

10) Remove clutch from housing.

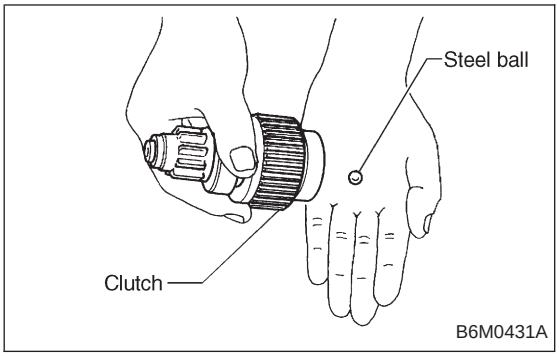

11) Take out steel ball from clutch.

CAUTION:
Be careful not to lose steel ball.

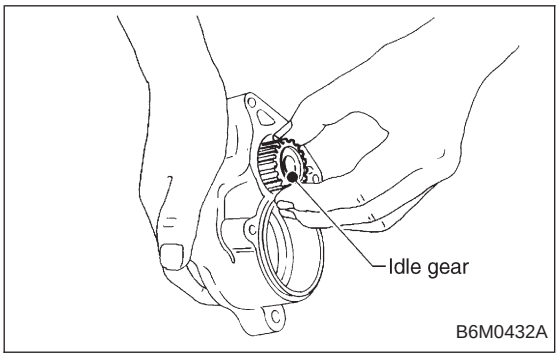

12) Remove idle gear from housing.

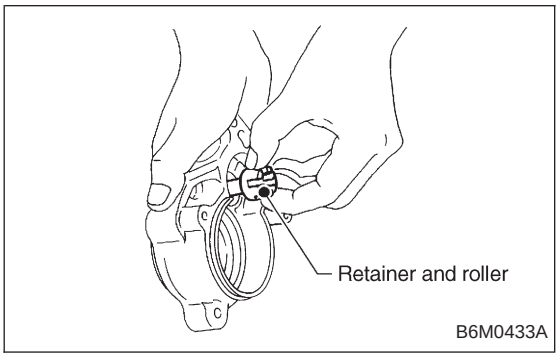

13) Remove retainer and roller from housing.

CAUTION:
Be careful not to drop retainer and roller.

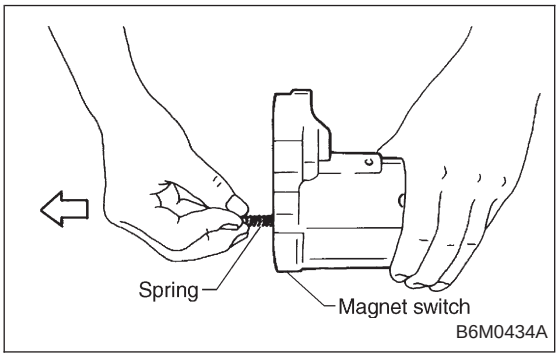

14) Remove coil spring from magnetic switch.

D: INSPECTION

1. ARMATURE

1) Check commutator for any sign of burns of rough surfaces or stepped wear. If wear is of a minor nature, correct it by using sand paper.

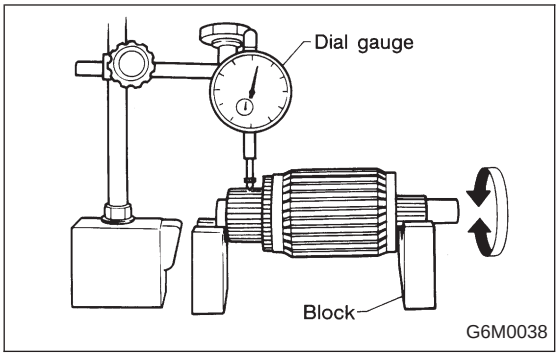

2) Run-out test
Check the commutator run-out and replace if it exceeds the limit.

Commutator run-out:
Standard
0.02 mm (0.0008 in), or less
Service limit
Less than 0.05 mm (0.0020 in)

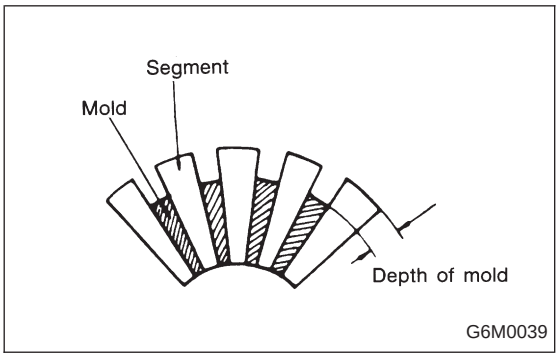

3) Depth of segment mold
Check the depth of segment mold.

Depth of segment mold:
0.6 mm (0.024 in)
Limit
0.2 mm (0.008 in)

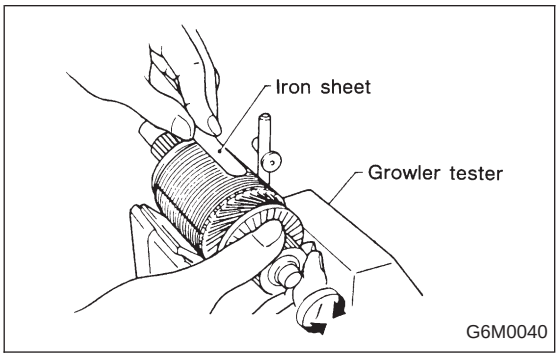

4) Armature short-circuit test
Check armature for short-circuit by placing it on growler tester. Hold a hacksaw blade against armature core while slowly rotating armature. A short-circuited armature will cause the blade to vibrate and to be attracted to core. If the hacksaw blade is attracted or vibrates, the armature, which is short-circuited, must be replaced or repaired.

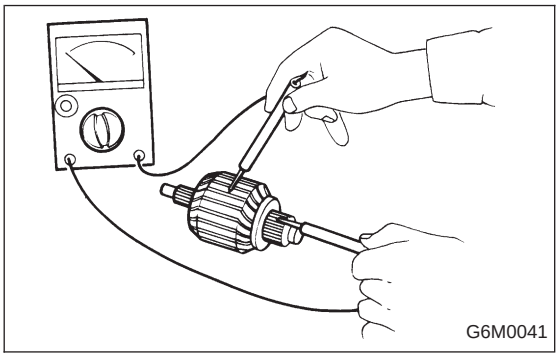

5) Armature ground test
Using circuit tester, touch one probe to the commutator segment and the other to shaft. There should be no continuity. If there is a continuity, armature is grounded.
Replace armature if it is grounded.

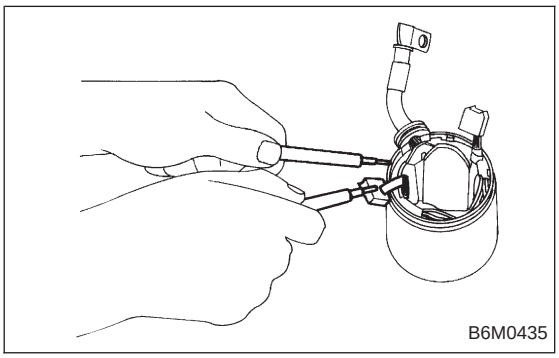

2. YOKE

Make sure pole is set in position.

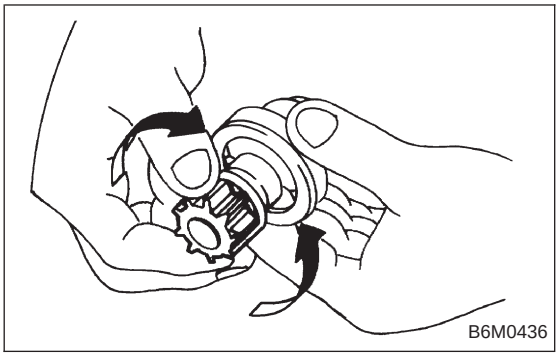

3. OVERRUNNING CLUTCH

Inspect teeth of pinion for wear and damage. Replace if it is damaged. Rotate pinion in direction of rotation (clockwise). It should rotate smoothly. But in opposite direction, it should be locked.

CAUTION:
Do not clean overrunning clutch with oil to prevent grease from flowing out.

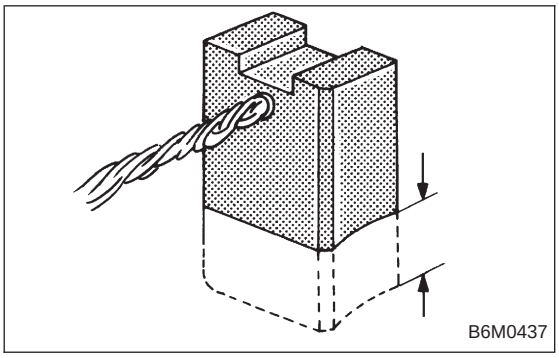

4. BRUSH AND BRUSH HOLDER

1) Brush length
Measure the brush length and replace if it exceeds the service limit.
Replace if abnormal wear or cracks are noticed.

Brush length:

Standard	***15 mm (0.59 in)***
Service limit	***10 mm (0.39 in)***

2) Brush movement
Be sure brush moves smoothly inside brush holder.

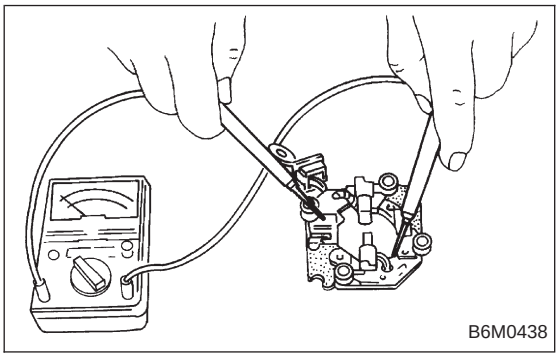

3) Insulation resistance of brush holder
Be sure there is no continuity between brush holder and its plate.

4) Brush spring force
Measure brush spring force with a spring scale. If it is less than the service limit, replace brush spring.

Brush spring force:
Standard
18.6 N (1.9 kg, 4.2 lb) (when new)
Service limit
6.9 N (0.7 kg, 1.5 lb)

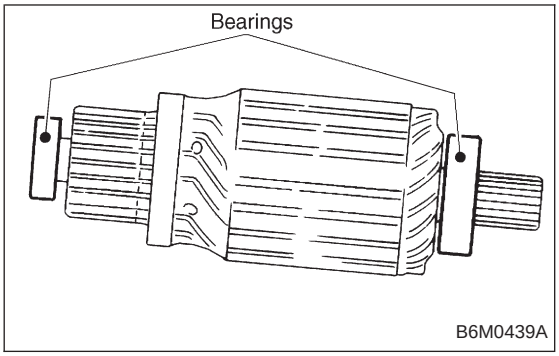

5. BEARING

1) Rotate bearing by hand; no binding should exist.
2) Rotate bearing rapidly; no abnormal noise should be heard.

E: ASSEMBLY

Assembly is in the reverse order of disassembly procedures. Observe the following:
1) Before assembling, lubricate disassembled parts at the points shown in “COMPONENT PARTS 6-1 [C101] and 6-1 [C102]”.

Grease:
ESSO BEACON 325
SCHELL ALVANIA GREASE RA or equivalent

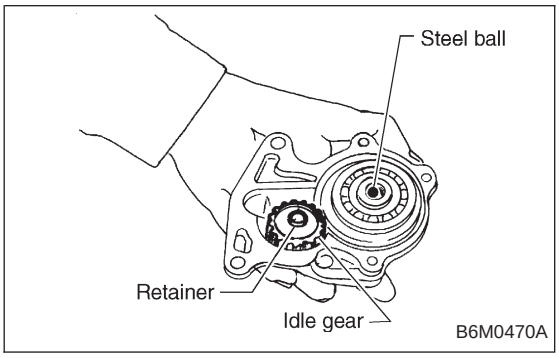

2) Assembling magnetic switch, clutch, and housing
To assemble, first install clutch to magnetic switch, then install idle gear, and finally install clutch.

CAUTION:
- **Do not forget to install steel ball and coil spring to clutch.**
- **Attach bearing to idle gear beforehand.**

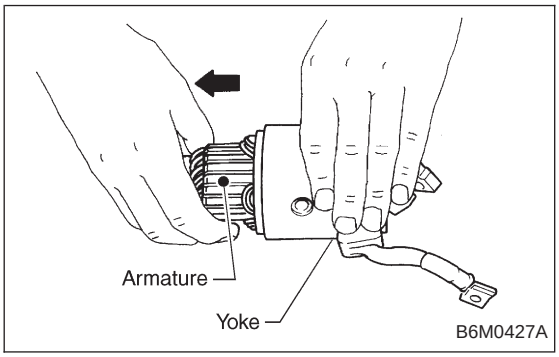

3) Installing armature to yoke

CAUTION:
Do not forget to put felt washer on armature shaft bearing.

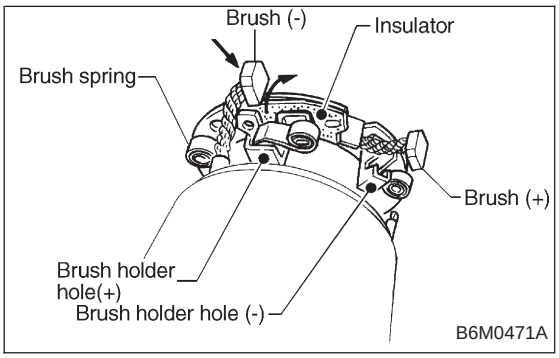

4) Installing brushes
Assemble brush holder to yoke as shown, then assemble two yoke-side brushes to brush holder.

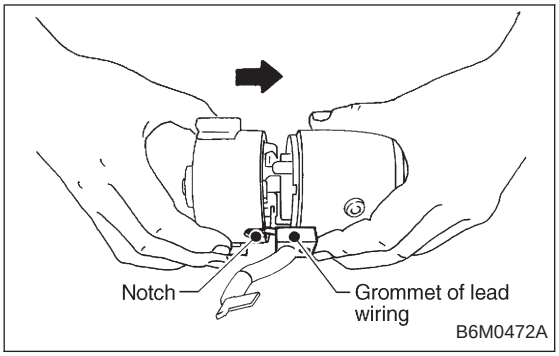

5) Installing end frame
When assembling end frame to yoke, align notched portion of end frame with lead wire grommet.

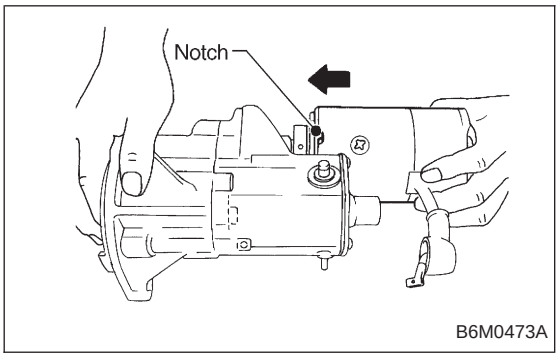

6) Installing yoke
When installing yoke to magnetic switch, align notch of yoke with protrusion of magnetic switch.

2. Generator

A: REMOVAL AND INSTALLATION

1) Disconnect battery ground cable.

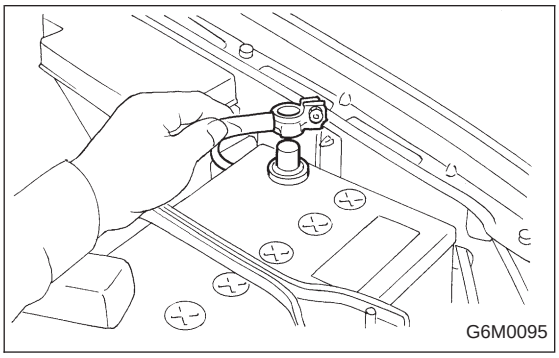

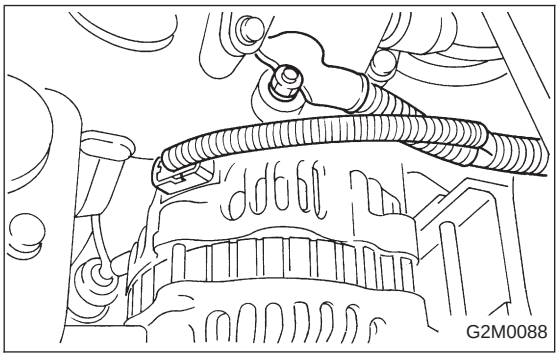

2) Disconnect connector and terminal from generator.

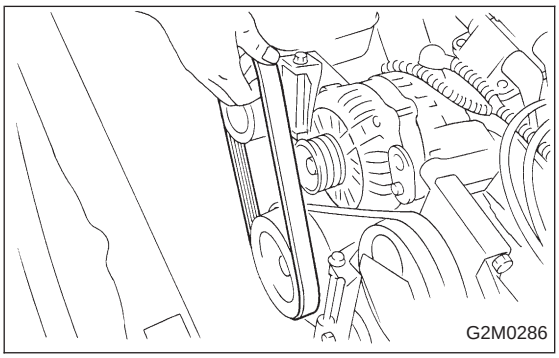

3) Remove V-belt cover.
4) Remove front side V-belt.