10. ABS System (ABS 5.3i Type)

1. SENSOR

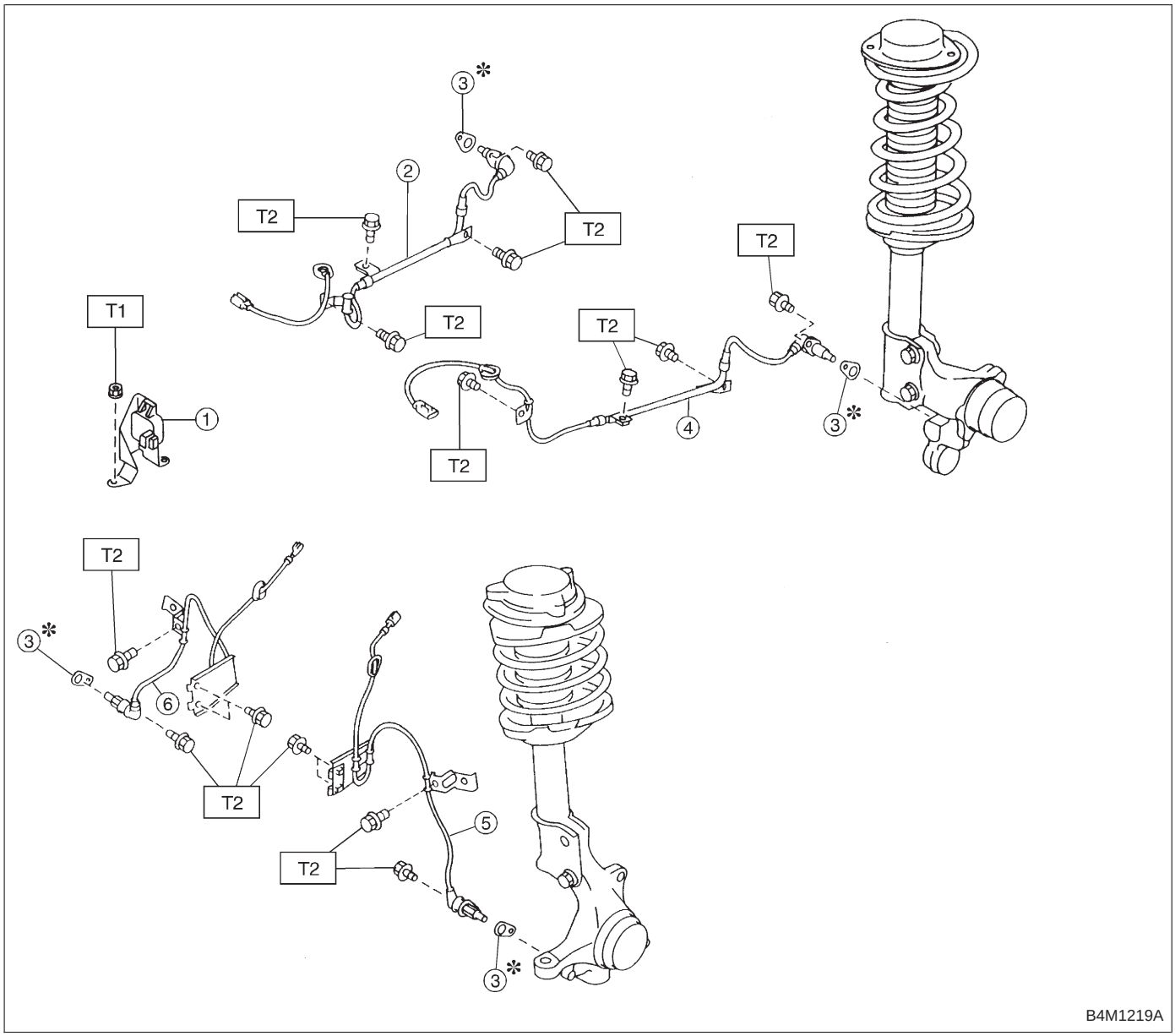

① G sensor (AWD only)
② Rear ABS sensor RH
③ ABS spacer
④ Rear ABS sensor LH
⑤ Front ABS sensor LH
⑥ Front ABS sensor RH

Tightening torque: N·m (kg-m, ft-lb)
T1: 7.4±2.0 (0.75±0.2, 5.4±1.4)
T2: 32±10 (3.3±1.0, 24±7)

COMPONENT PARTS

2. ABS CONTROL MODULE AND HYDRAULIC CONTROL UNIT (ABSCM&H/U)

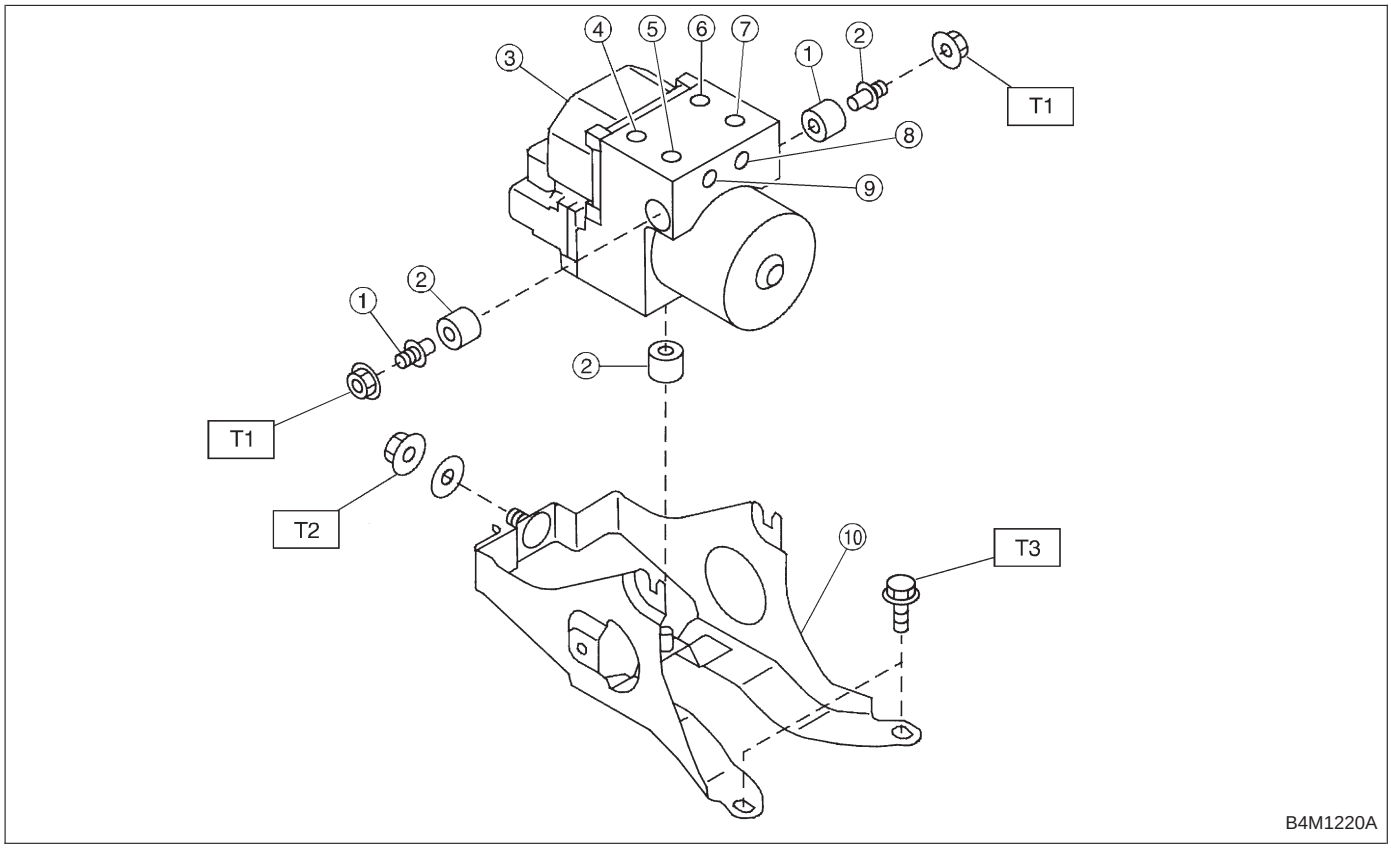

① Stud bolt
② Damper
③ ABS control module and hydraulic control unit
④ Front-LH outlet
⑤ Secondary inlet
⑥ Front-RH outlet
⑦ Primary inlet
⑧ Rear-LH outlet
⑨ Rear-RH outlet
⑩ Bracket

Tightening torque: N·m (kg-m, ft-lb)
T1: 18±5 (1.8±0.5, 13.0±3.6)
T2: 29±7 (3.0±0.7, 21.7±5.1)
T3: 32±10 (3.3±1.0, 24±7)