6. ABS System (Except ABS 5.3i Type)

1. SENSOR AND CONTROL MODULE (EXCEPT ABS 5.3 TYPE)

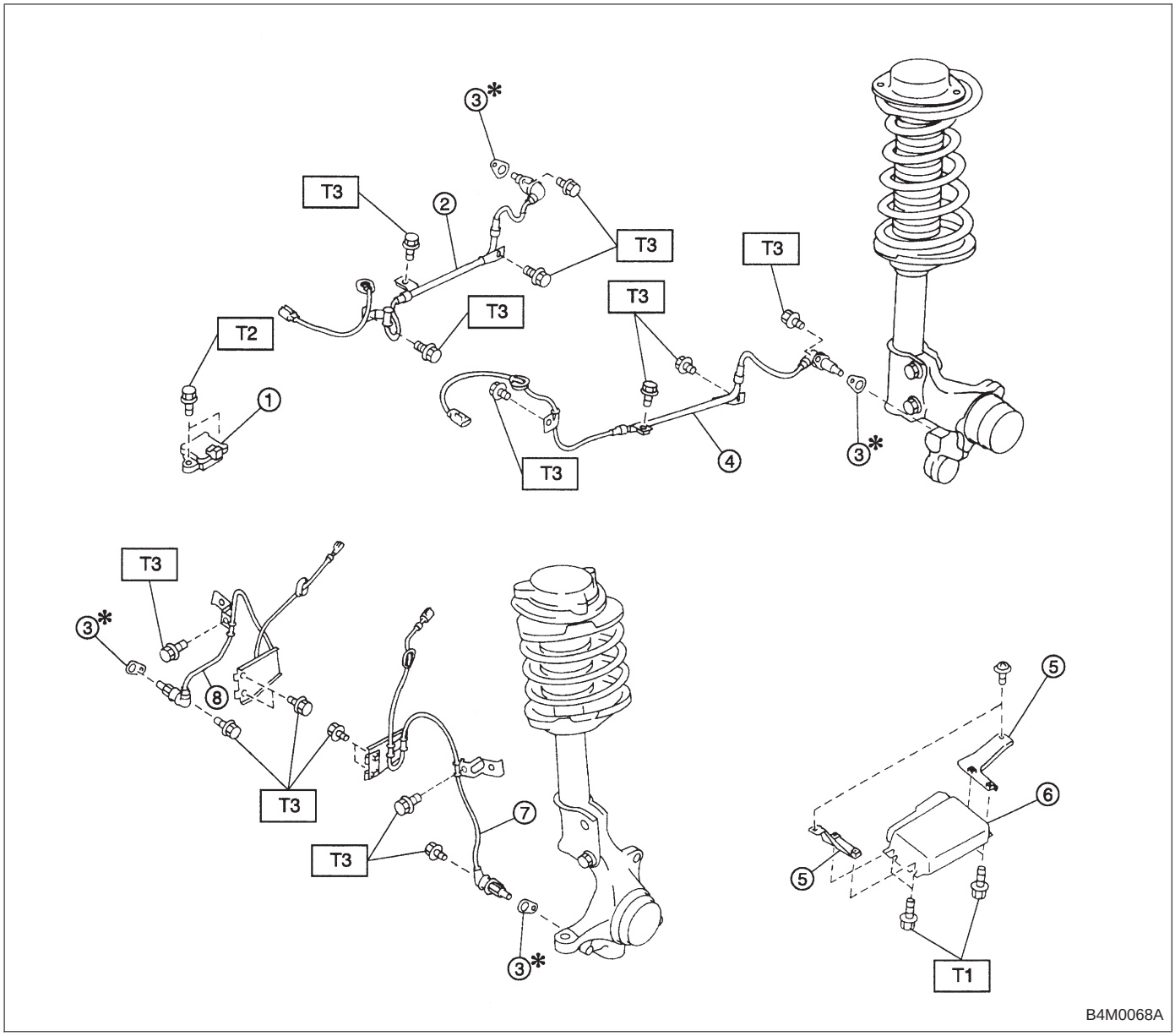

① G sensor (AWD MT only)
② Rear ABS sensor RH
③ ABS spacer
④ Rear ABS sensor LH
⑤ Bracket
⑥ ABS control module
⑦ Front ABS sensor LH
⑧ Front ABS sensor RH

Tightening torque: N·m (kg-m, ft-lb)
T1: 5.9±1.5 (0.60±0.15, 4.3±1.1)
T2: 7.4±2.0 (0.75±0.2, 5.4±1.4)
T3: 32±10 (3.3±1.0, 24±7)

2. HYDRAULIC CONTROL UNIT (EXCEPT ABS 5.3 TYPE)

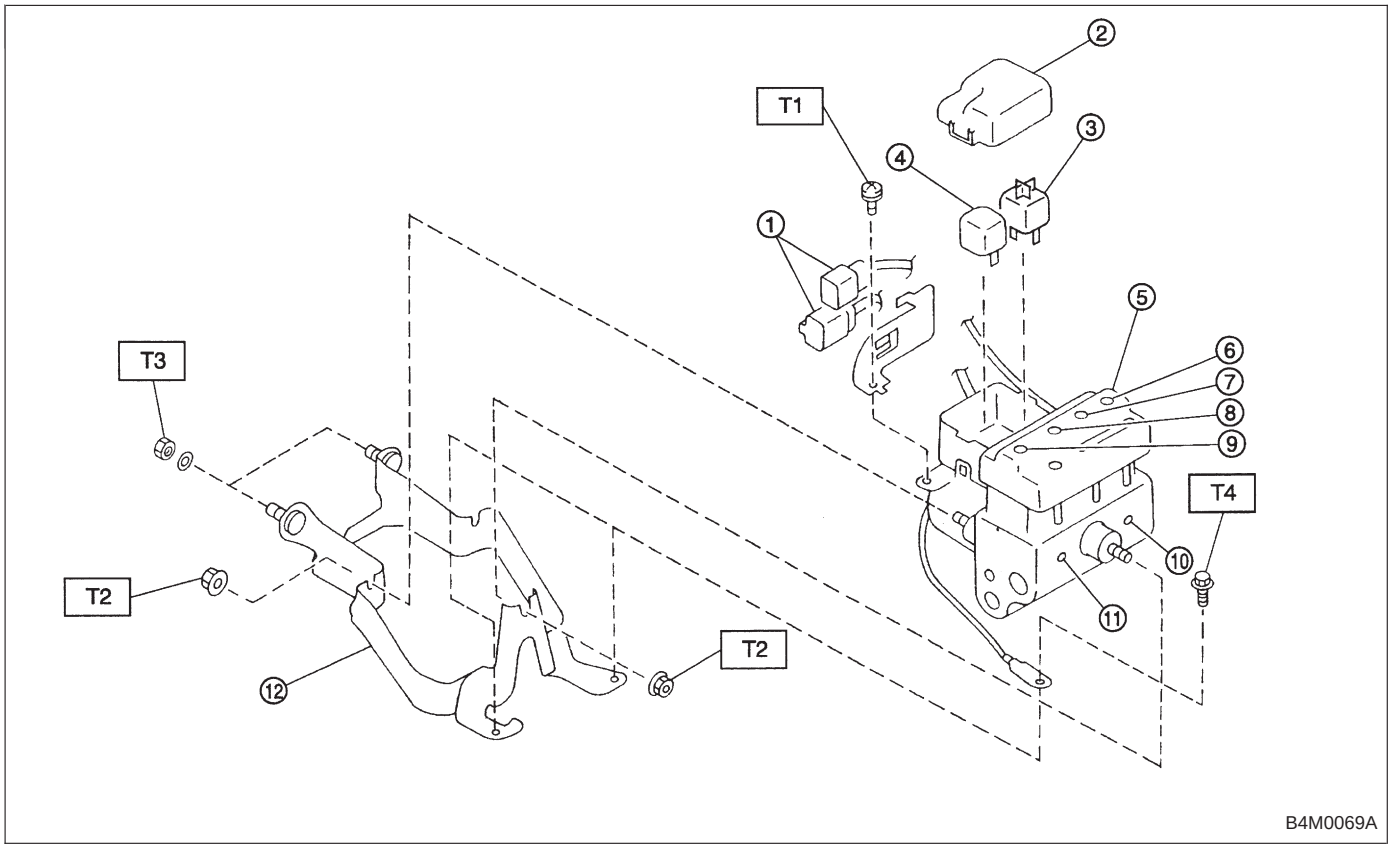

① Connector
② Cap
③ Motor relay
④ Valve relay
⑤ Hydraulic control unit
⑥ Front-RH outlet
⑦ Rear-LH outlet
⑧ Rear-RH outlet
⑨ Front-LH outlet
⑩ Primary inlet
⑪ Secondary inlet
⑫ Bracket

Tightening torque: N·m (kg-m, ft-lb)
T1: 1.2±0.2 (0.125±0.025, 0.9±0.2)
T2: 18±5 (1.8±0.5, 13.0±3.6)
T3: 29±7 (3.0±0.7, 21.7±5.1)
T4: 32±10 (3.3±1.0, 24±7)

3. SENSOR AND CONTROL MODULE (ABS 5.3 TYPE)

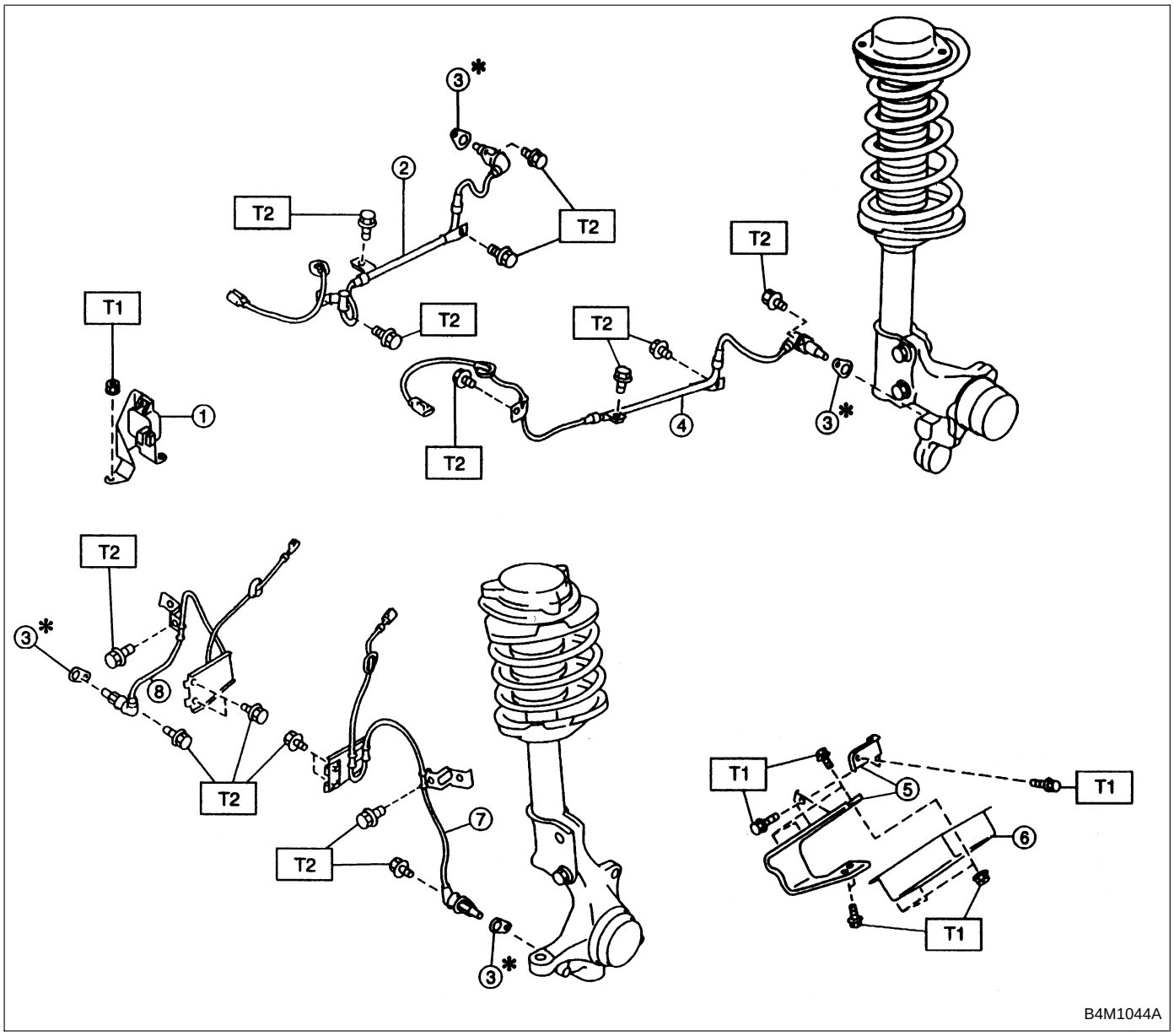

① G sensor (AWD only)
② Rear ABS sensor RH
③ ABS spacer
④ Rear ABS sensor LH
⑤ Bracket
⑥ ABS control module
⑦ Front ABS sensor LH
⑧ Front ABS sensor RH

Tightening torque: N·m (kg-m, ft-lb)
T1: 7.4±2.0 (0.75±0.2, 5.4±1.4)
T2: 32±10 (3.3±1.0, 24±7)

4. HYDRAULIC CONTROL UNIT (ABS 5.3 TYPE)

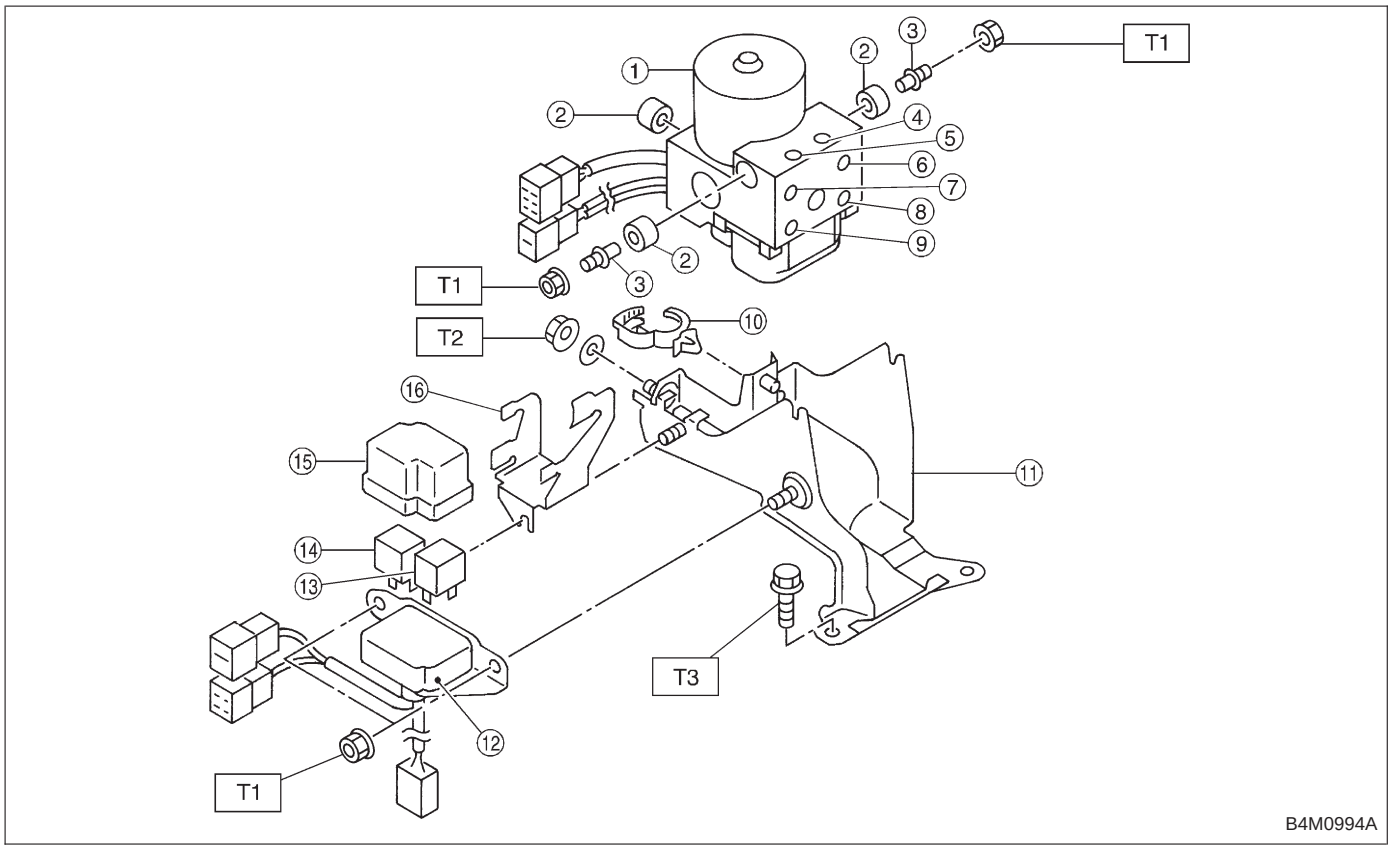

① Hydraulic control unit
② Damper
③ Stud bolt
④ Rear-RH outlet
⑤ Rear-LH outlet
⑥ Secondary inlet
⑦ Primary inlet
⑧ Front-LH outlet
⑨ Front-RH outlet
⑩ Cable clip
⑪ Bracket
⑫ Relay box
⑬ Motor relay
⑭ Valve relay
⑮ Cap
⑯ Connector bracket

Tightening torque: N·m (kg-m, ft-lb)
T1: 18±5 (1.8±0.5, 13.0±3.6)
T2: 29±7 (3.0±0.7, 21.7±5.1)
T3: 32±10 (3.3±1.0, 24±7)