9. ABS/TCS System

1. SENSOR AND CONTROL MODULE

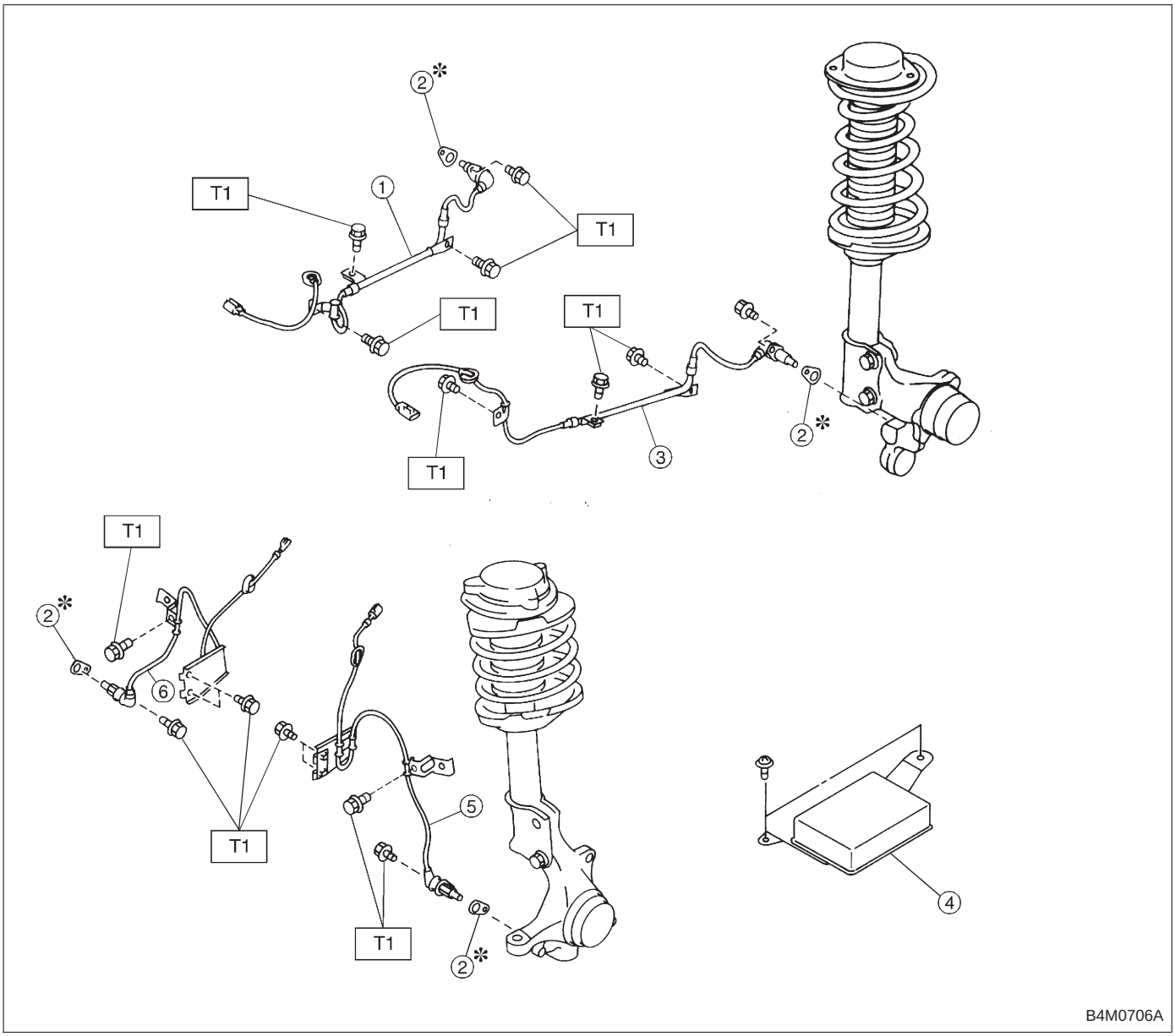

① Rear ABS sensor RH
② ABS spacer
③ Rear ABS sensor LH
④ ABS/TCS control module
⑤ Front ABS sensor LH
⑥ Front ABS sensor RH

Tightening torque: N·m (kg-m, ft-lb)
T1: 32±10 (3.3±1.0, 24±7)

COMPONENT PARTS

2. HYDRAULIC UNIT

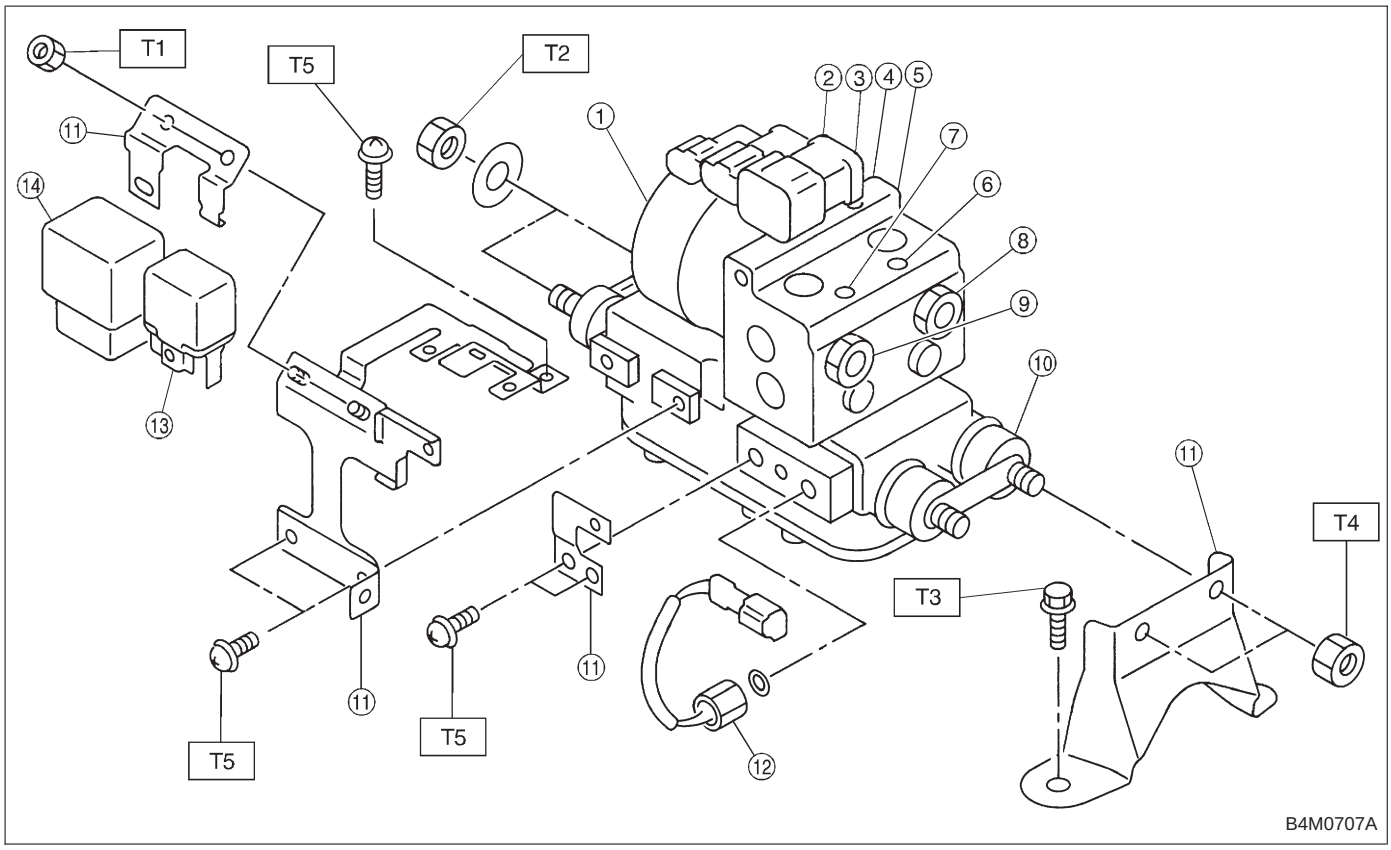

① ABS/TCS Hydraulic control unit
② Rear-RH outlet
③ Front-LH outlet
④ Front-RH outlet
⑤ Rear-LH outlet
⑥ Secondary inlet
⑦ Primary inlet
⑧ Secondary suction line
⑨ Primary suction line
⑩ Bumper
⑪ Bracket
⑫ Pressure switch
⑬ Valve relay
⑭ Motor relay

Tightening torque: N·m (kg-m, ft-lb)
T1: 7.4±2.0 (0.75±0.2, 5.4±1.4)
T2: 29±7 (3.0±0.7, 21.7±5.1)
T3: 32±10 (3.3±1.0, 24±7)
T4: 38±10 (3.8±1.0, 27±7)
T5: 3.1±1 (0.32±0.1, 2.3±0.7)