5. Brake Booster

1. MODELS WITH ABS AND TCS

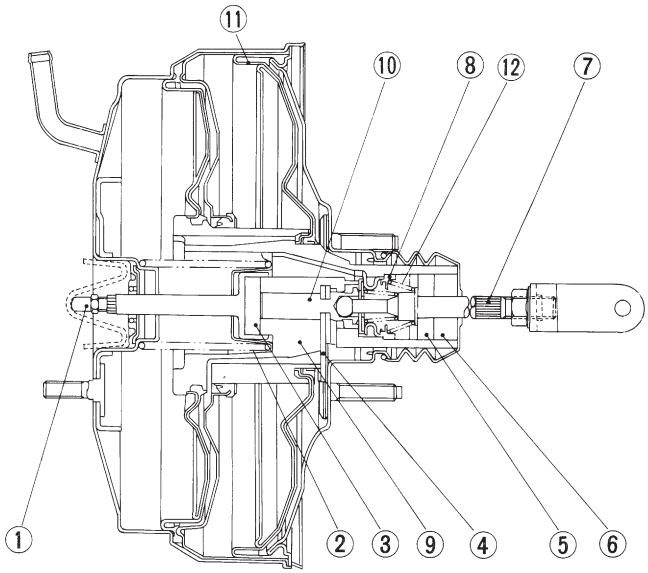

G4M0355

① Push rod
② Return spring
③ Reaction disc
④ Key
⑤ Filter
⑥ Silencer
⑦ Operating rod
⑧ Poppet valve
⑨ Valve body
⑩ Plunger valve
⑪ Diaphragm plate
⑫ Valve return spring

2. MODELS WITHOUT ABS AND TCS

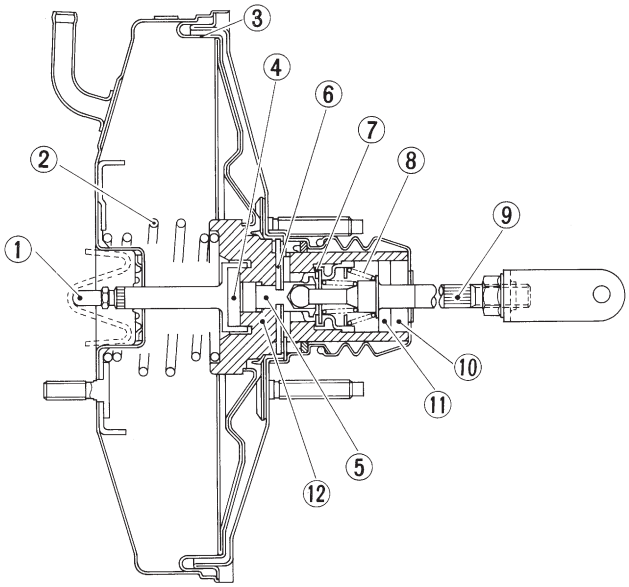

G4M0356

① Push rod
② Return spring
③ Diaphragm plate
④ Reaction disc
⑤ Plunger valve
⑥ Key
⑦ Poppet valve
⑧ Valve return spring
⑨ Operating rod
⑩ Silencer
⑪ Filter
⑫ Valve body