1. Front Disc Brake

1. EXCEPT 2500 cc MODEL

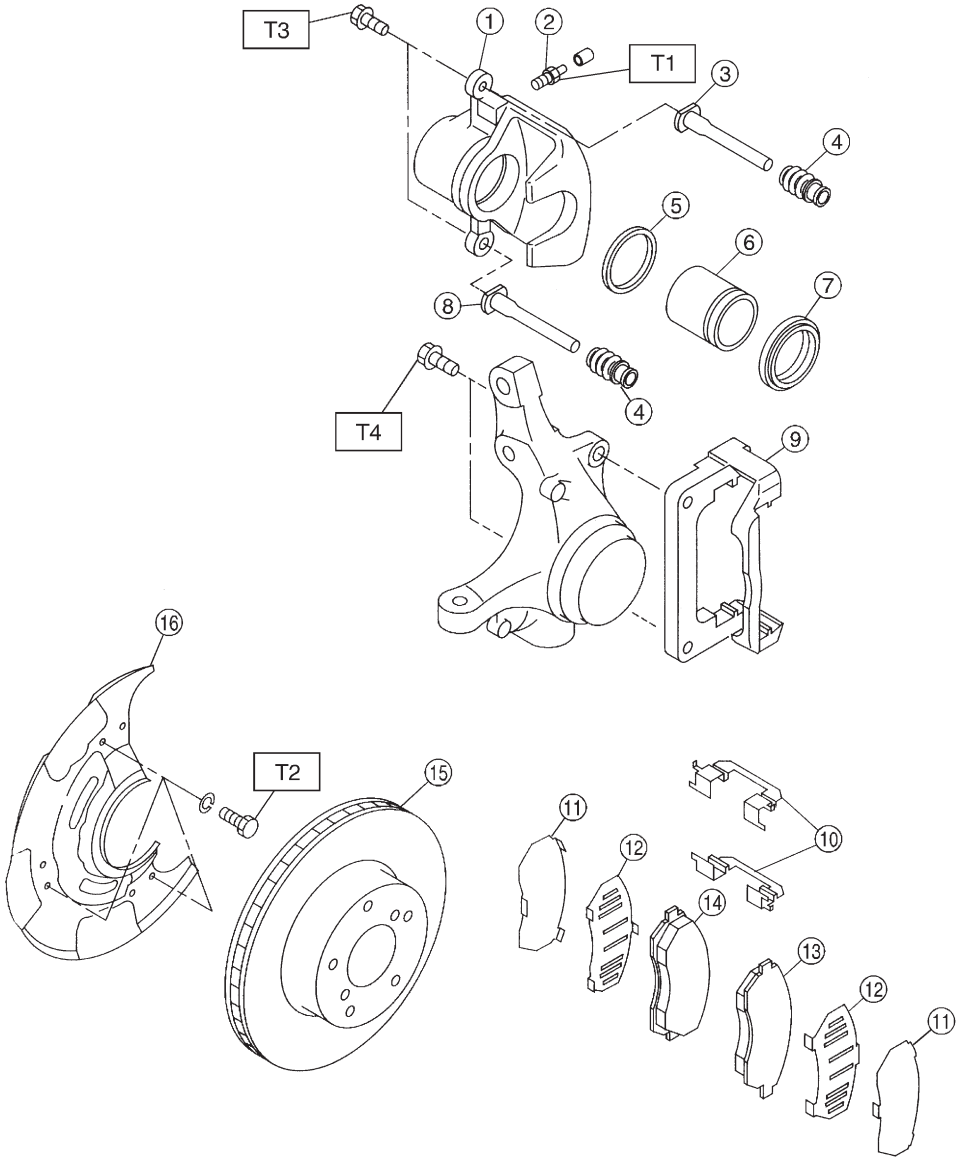

① Caliper body
② Air bleeder screw
③ Guide pin (Green)
④ Pin boot
⑤ Piston seal
⑥ Piston
⑦ Piston boot
⑧ Lock pin (Yellow)
⑨ Support
⑩ Pad clip
⑪ Outer shim
⑫ Inner shim
⑬ Pad (Outside)
⑭ Pad (Inside)
⑮ Disc rotor
⑯ Disc cover

Tightening torque: N·m (kg-m, ft-lb)
T1: 8±1 (0.8±0.1, 5.8±0.7)
T2: 18±5 (1.8±0.5, 13.0±3.6)
T3: 37±5 (3.8±0.5, 27.5±3.6)
T4: 78±10 (8.0±1.0, 58±7)

2. 2500 cc MODEL

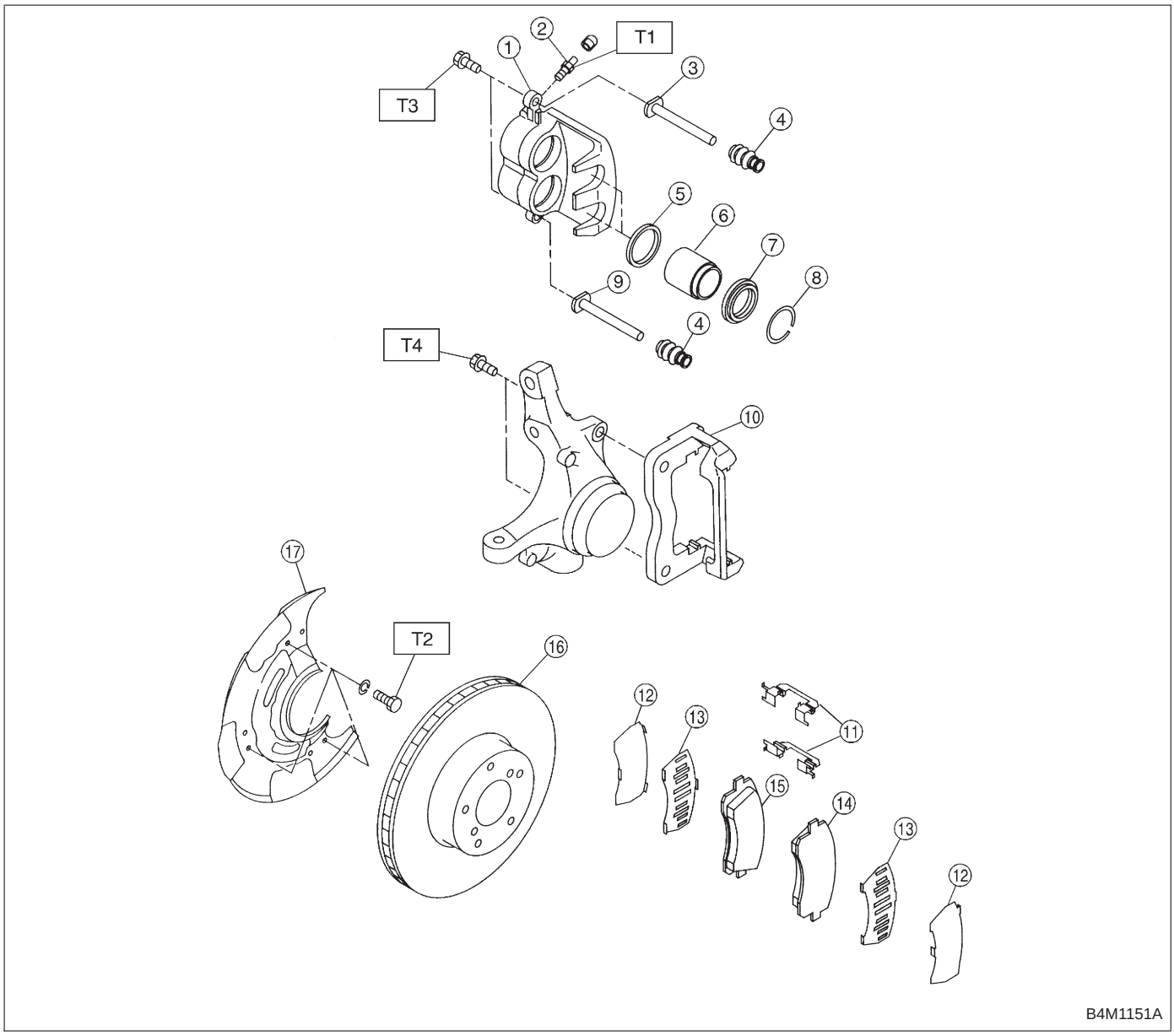

① Caliper body
② Air bleeder screw
③ Guide pin (Green)
④ Pin boot
⑤ Piston seal
⑥ Piston
⑦ Piston boot
⑧ Boot ring
⑨ Lock pin (Yellow)
⑩ Support
⑪ Pad clip
⑫ Outer shim
⑬ Inner shim
⑭ Pad (Outside)
⑮ Pad (Inside)
⑯ Disc rotor
⑰ Disc cover

Tightening torque: N·m (kg-m, ft-lb)
T1: 8±1 (0.8±0.1, 5.8±0.7)
T2: 18±5 (1.8±0.5, 13.0±3.6)
T3: 37±5 (3.8±0.5, 27.5±3.6)
T4: 78±10 (8.0±1.0, 58±7)