# 4. Master Cylinder

## 1. WITHOUT TCS

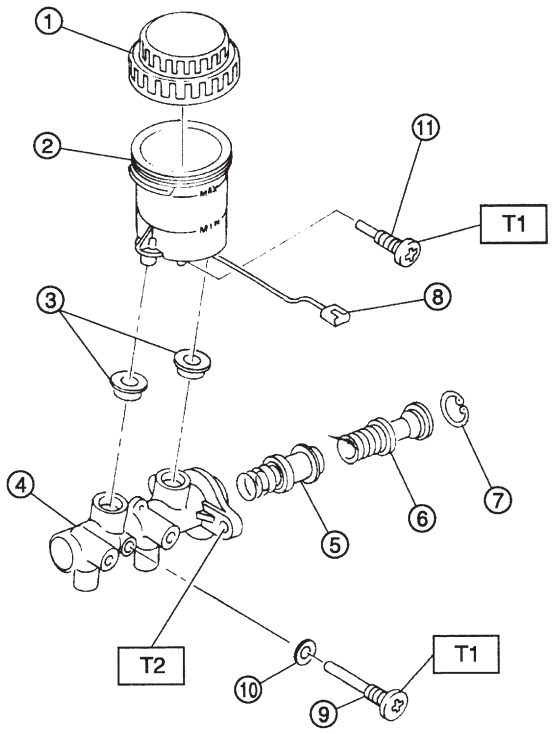


B4M0067A

① Cap
② Reserve tank
③ Seal
④ Cylinder body
⑤ Secondary piston
⑥ Primary piston
⑦ C-ring
⑧ Level indicator ASSY
⑨ Supply valve stopper (With ABS)
⑩ Gasket (With ABS)
⑪ Reservoir stopper bolt

***Tightening torque: N·m (kg-m, ft-lb)***
***T1: 2.2±0.7 (0.225±0.075, 1.6±0.5)***
***T2: 14±4 (1.4±0.4, 10.1±2.9)***

## 2. WITH TCS

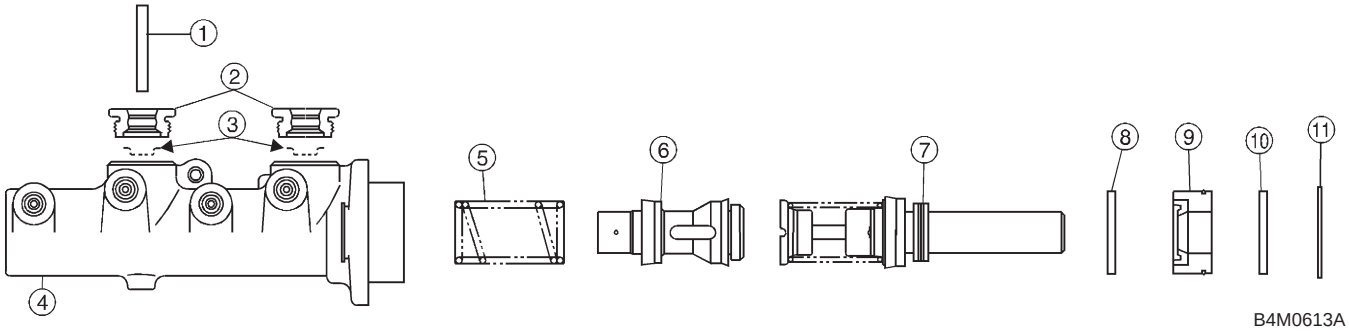


B4M0613A

① Cylinder pin
② Seal
③ Filter
④ Cylinder body
⑤ Spring
⑥ Secondary piston
⑦ Primary piston
⑧ Stop washer A
⑨ Bush
⑩ Stop washer B
⑪ C-ring

## 3. RHD MODEL

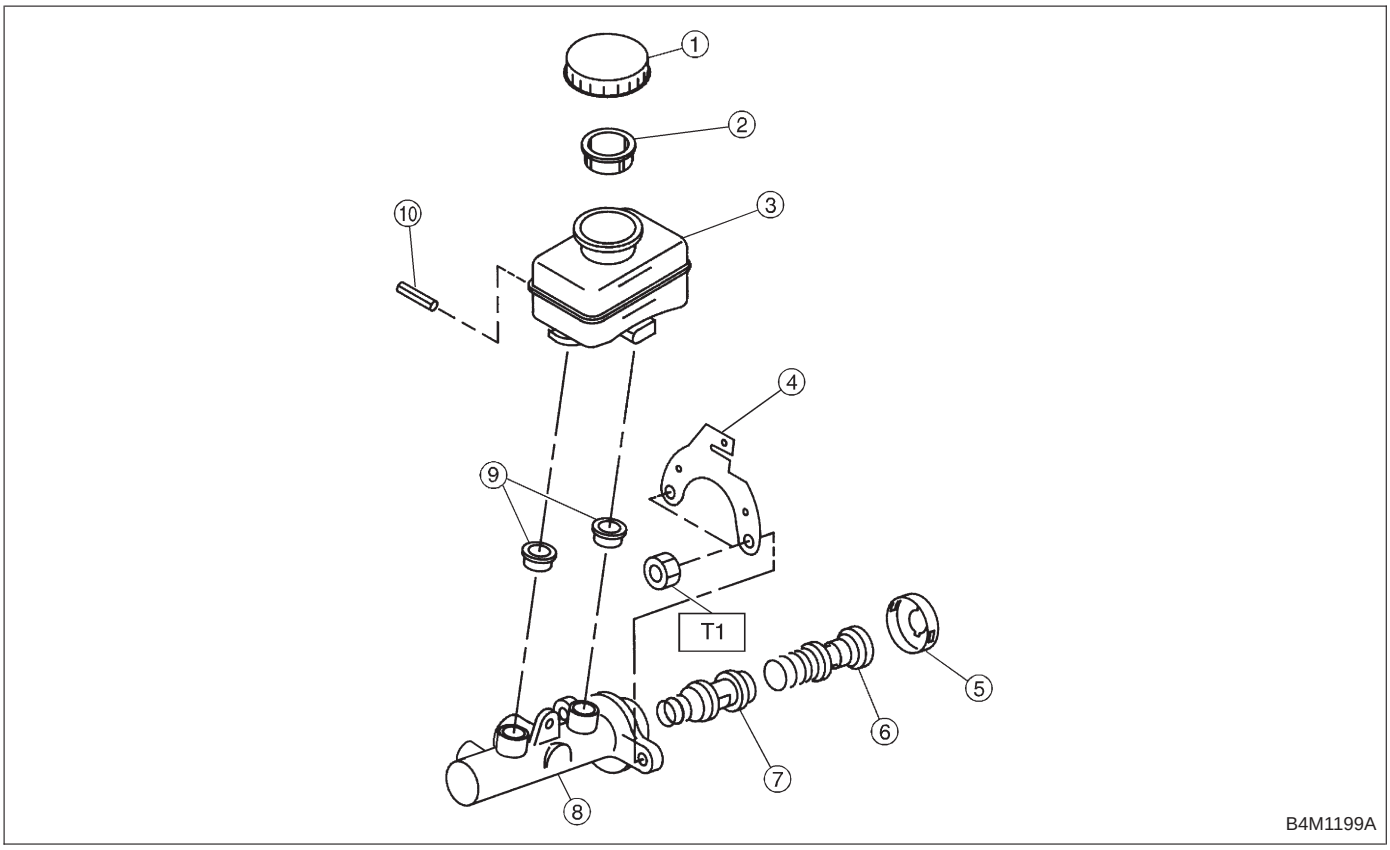


1. Cap
2. Filter
3. Reservoir tank
4. Bracket
5. Piston retainer
6. Primary piston
7. Secondary piston
8. Cylinder body
9. Seal
10. Pin

***Tightening torque: N·m (kg-m, ft-lb)***
***T1: 14±4 (1.4±0.4, 10.1±2.9)***